Sept. 27, 1938. P. D. PHILLIPS 2,131,117

GLOBE TYPE EXPLOSIONPROOF FIXTURE

Filed Jan. 14, 1935

Fig. 4.

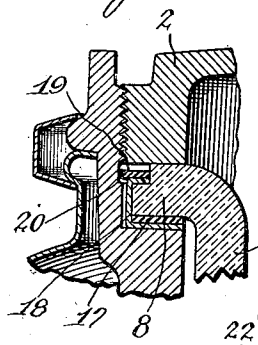


Fig. 1.




Fig. 2.

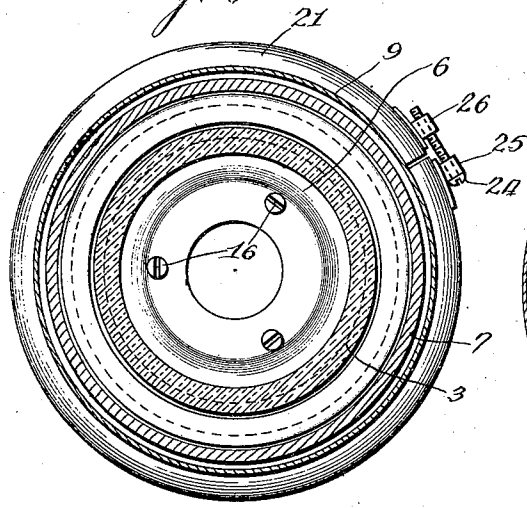


Fig. 3.

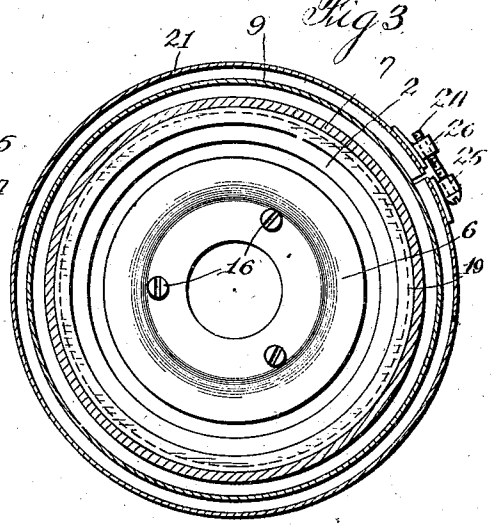


Inventor:
Paul D. Phillips.
By: Jones, Addington, Ames & Seibold
Attys.

Patented Sept. 27, 1938 2,131,117

# UNITED STATES PATENT OFFICE

2,131,117

## GLOBE TYPE EXPLOSIONPROOF FIXTURE

Paul D. Phillips, Elmhurst, Ill., assignor to Benjamin Electric Mfg. Company, Des Plaines, Ill., a corporation of Illinois

Application January 14, 1935, Serial No. 1,623

1 Claim. (Cl. 240—11.2)

My invention relates to lighting fixtures.

One of the objects of my invention is to provide an improved explosion-proof fixture which will have high efficiency and desirable light distribution, with ample strength to withstand the pressure of internal explosions without breaking down or permitting flame, hot gases or sparks to escape and ignite the surrounding atmosphere.

A further object of my invention is to provide such a construction of a type involving the use of a bulb-enclosing globe, having a small reflector inside of the casing for directing light through the globe.

A further object of my invention is to provide improved means for holding the glass globe in the globe holder or guard.

A further object is to provide an explosion-proof fixture of the type indicated having an external reflector surrounding the globe.

A further object is to provide improved means for holding the external reflector on the fixture or guard.

A further object is to provide improved means for effecting a tight connection between the globe and the rest of the fixture.

Further objects and advantages of the invention will be apparent from the description and claim.

In the drawing, in which my invention is illustrated,

Figure 1 is a side elevational view of an explosion-proof fixture, parts being broken away to show the interior;

Fig. 2 is a section on the line 2—2 of Fig. 1;

Fig. 3 is a section on the line 3—3 of Fig. 1; and

Fig. 4 is an enlarged sectional view of a detail.

Referring now to the drawing in detail, the construction shown comprises an explosion-proof lighting fixture including a metal hood 1, a metal supporting and retaining member 2 screwed into the lower part of the hood, a glass globe 3 having a tight engagement with the supporting and retaining member 2 and cooperating with the hood 1 to form a tight enclosure, a socket 4 mounted on the hood 1 and held therein by the retaining member 2 for supporting a lamp bulb 5 with its light source extending into the glass globe 3, an annular reflector member 6 mounted on the supporting member 2 for reflecting light from the light source through the globe 3, a metal supporting guard screw-threaded onto the supporting member 2 for clamping the outwardly extending annular flange 8 on the globe 3 tightly against the metal supporting member 2, and an external annular reflector member 9 mounted on the guard 7 for reflecting light rays falling thereon coming from the light source through the globe 3.

The socket 4 is a one-piece porcelain socket so constructed as to provide a barrier between the space within the globe 3 and the upper part of the hood so that explosions originating in either space cannot be transmitted to the other.

In order to effect a tight engagement, the annular flange 10 on the one-piece socket is provided with a gasket construction, including an asbestos washer 11 held in place on the flange by means of an aluminum band 12 spun over the flange 10 on the socket. When the retaining member 2 is screwed tightly into the hood, it effects a seal adjacent the annular flange 10 on the socket, due to the gasket construction. A removable inspection plug 12a may be provided for access to the wiring terminals.

In order to position the socket in the hood, the socket is provided with a groove 13 cooperating with a rib 14 on the hood. A set screw 15 is provided for preventing the supporting member 2 from becoming unscrewed. The internal annular reflector 6 may be of any suitable type, that shown being an aluminum reflector secured to the supporting member 2 by means of screws 16.

In order to provide a tight seal between the glass globe 3 and the supporting member 2, the lower edge of the metal supporting member 2 is finished smoothly and the upper face of the flange 8 on the globe is ground on that portion which engages the supporting member. The gasket construction at this point comprises an asbestos washer 17 (Fig. 4) held in place on the flange 8 by means of a metal band 18 spun over the flange on the globe and holding the asbestos gasket 17 in position. In order to hold the globe in position on the guard, when the guard is unscrewed from the supporting member, a split ring retaining member 19 (Fig. 3) is provided which lies above the edge of the flange 8 on the globe and springs outwardly into an annular recess 20 below the threaded portion of the guard.

The external reflector member 9 may be of any suitable type, that shown being porcelain enameled steel with a white inside reflecting surface. This is held in place on the guard by means of an annular clamping band 21 which embraces annular beads 22 and 23 (Fig. 1) on the guard and reflector member, respectively. This clamping band may be tightened up by means of a screw 24 swiveled in a lug 25 on one end of the band 21 and threaded into a lug 26 secured to the other end of the band.

In use, a large portion of the light from the

light source passes directly through the lower portion of the globe 3 as a direct cone of light. The portion falling on the internal auxiliary reflector 6 is reflected therefrom outwardly through the globe. The portion passing through the globe and falling on the external reflector 9 is reflected therefrom in such a way as to give a generally spread light beam. The light distribution is such as to give a high efficiency and a desirable spread. The construction is such that the fixture has ample strength to withstand the high pressures of internal explosions without breaking down or permitting flame, hot gases or sparks to escape and ignite the surrounding atmosphere.

Further modifications will be apparent to those skilled in the art and it is desired, therefore, that the invention be limited only by the prior art and the scope of the appended claim.

Having thus described my invention, what I claim and desire to secure by Letters Patent is:

An explosion-proof fixture comprising a hood construction, a cup-like glass globe, a cup-like guard embracing said cup-like globe, a lamp socket mounted in said hood construction for supporting a lamp bulb so that it extends into said globe, said hood construction being provided with an annular skirt member for supporting said cup-like globe and said cup-like guard, said guard having an outwardly-extending annular bead, a reflector surrounding said guard and having an annular bead adjacent and below said guard bead, and a split channeled ring surrounding and embracing both beads for holding the reflector on the guard.

PAUL D. PHILLIPS.