Sept. 27, 1927. 1,643,670

M. H. LOUGHRIDGE

MOTION PICTURE DEVICE

Filed Feb. 21, 1921 3 Sheets-Sheet 1

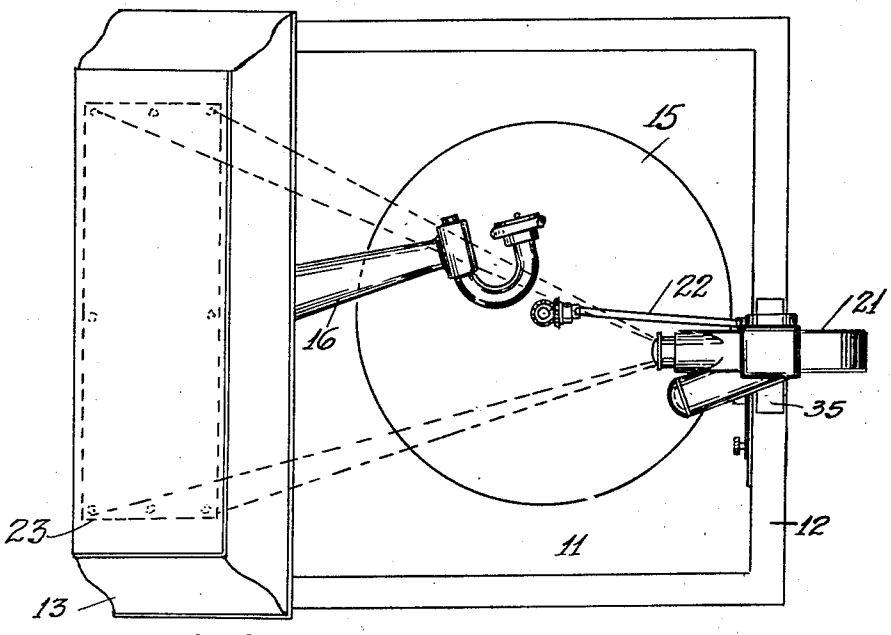

Fig. 1

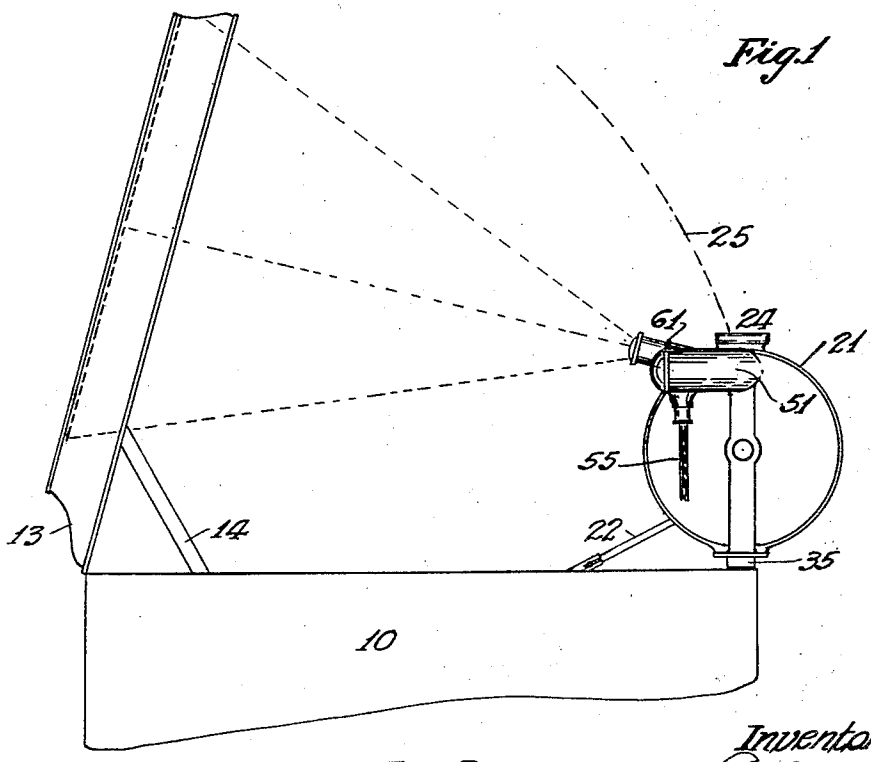

Fig. 2

Inventor,
Maurice H. Loughridge.

Sept. 27, 1927. 1,643,670

M. H. LOUGHRIDGE

MOTION PICTURE DEVICE

Filed Feb. 21, 1921 3 Sheets-Sheet 2

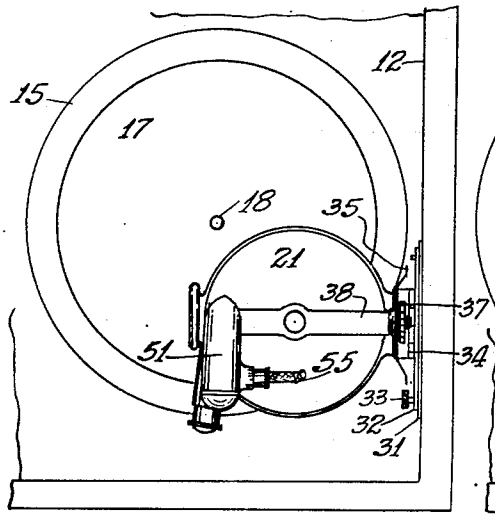

Fig. 3

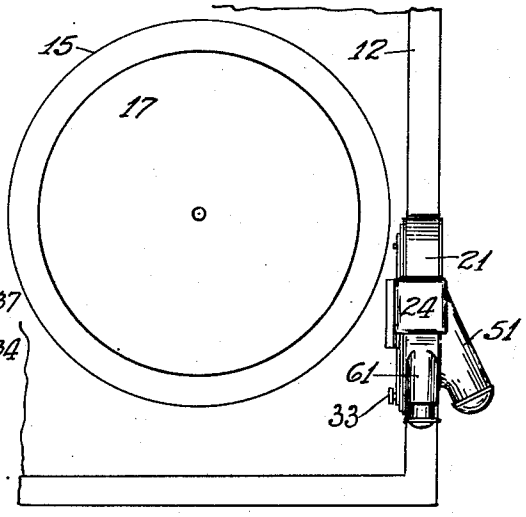

Fig. 5

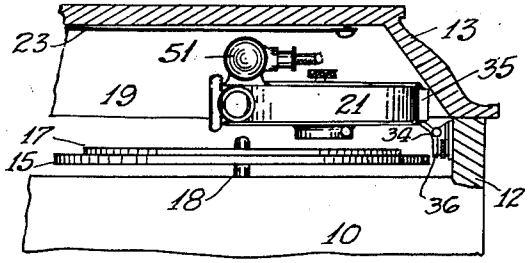

Fig. 4

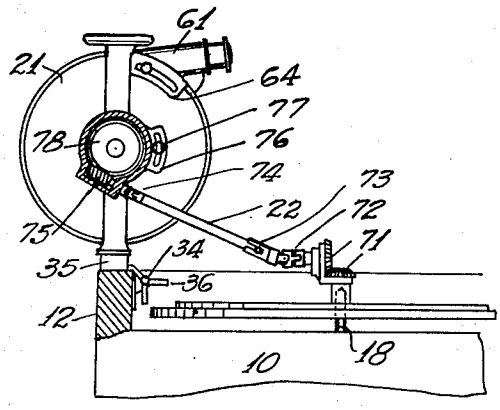

Fig. 6

Matthew H. Loughridge INVENTOR.

Sept. 27, 1927. 1,643,670

M. H. LOUGHRIDGE

MOTION PICTURE DEVICE

Filed Feb. 21, 1921 3 Sheets-Sheet 3

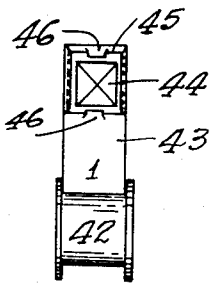

Fig 9

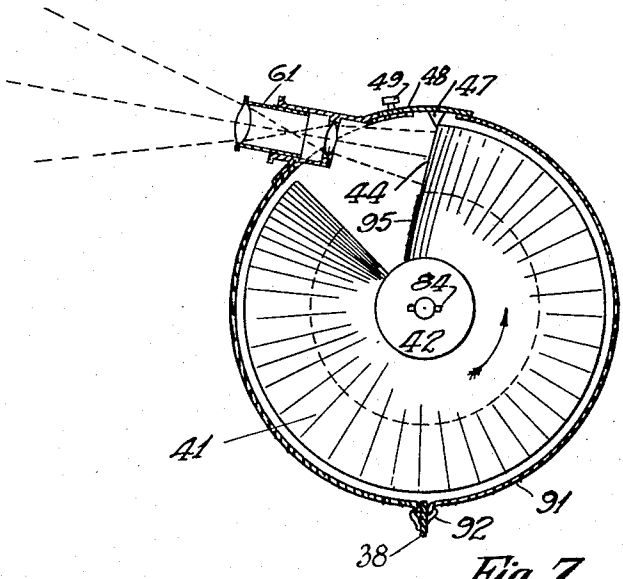

Fig. 7

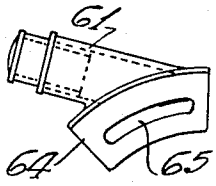

Fig. 10

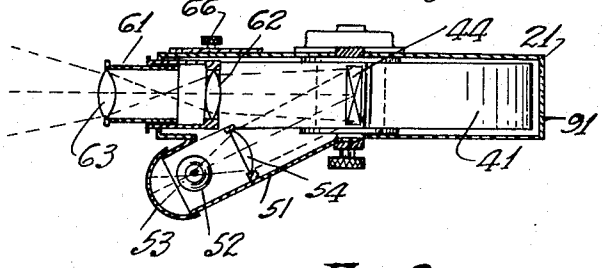

Fig. 8

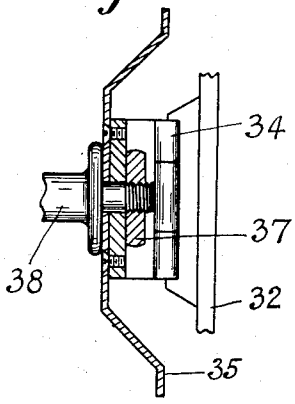

Fig. 12

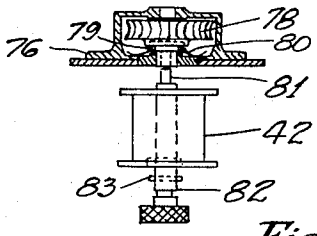

Fig. 11

Inventor

Matthew H. Loughridge

By Attorney

Patented Sept. 27, 1927. 1,643,670

UNITED STATES PATENT OFFICE.

MATTHEW H. LOUGHRIDGE, OF BOGOTA, NEW JERSEY.

MOTION-PICTURE DEVICE.

Application filed February 21, 1921. Serial No. 446,657.

This invention relates to motion picture machines and particularly to a novel construction in machines of this type whereby the mechanism can be enclosed in a cabinet and the cover of the cabinet used for a projecting screen. This invention is also adaptable for use in combination with phonographs, producing a motion picture which operates in synchronism with the phonograph record. Among other objects, this invention secures a convenient means for reproducing motion pictures which may be made portable, does not use inflammable film, is comparatively cheap and inexpensive to make, can be made as an attachment for phonographs of the cabinet type and utilizes the cover of the phonograph cabinet as a projecting screen and can be made to fold inside the cabinet when it is closed or turned clear of the turntable when the phonograph is used alone. Other objects of this invention will be understood from the following specification and the accompanying drawings forming part thereof, in which Fig. 1 is a top plan view of this invention applied to a cabinet type of phonograph. Fig. 2 is a side elevation corresponding to Fig. 1, Fig. 3 shows the position of the motion picture device when turned to enclose within the phonograph cover, Fig. 4 is a corresponding view to Fig. 3, in side elevation, showing in section the position of the cover when closed, Fig. 5 shows the position in which the motion picture device may be placed when the phonograph is used for sound producing purposes. Fig. 6 shows certain details of the driving mechanism from the stem of the phonograph turntable to the motion picture device, Fig. 7 shows a side elevation with the casing in section showing the motion picture record, Fig. 8 is a plan view corresponding to Fig. 7 showing the method of projection, Figs. 9, 10, 11 and 12 show details of the construction of the mechanism used to carry out this invention.

This invention consists in the use of a circular drum or record containing pictures obtained from a motion picture film in regular order on the leaves composing this drum and an arrangement whereby this drum may be rotated and these leaves released similar to the leaves of a book, to produce the effect of motion pictures. These pictures are projected by reflected light secured from a lamp placed on the side of the drum and arranged to illuminate each picture as it is released on the rotation of the drum. A system of lenses of the ordinary type is used to project this picture onto a screen. The screen may be supported on a wire frame and arranged for back projection. The preferable arrangement, however, as embodied in the accompanying drawings, is to use the cover of the cabinet which houses the motion picture device as a screen, upon which the pictures are projected. A clock-work driving mechanism may be used for rotating the picture drum and the entire apparatus enclosed in a suitable cabinet. However, this invention contemplates the use of this device in combination with the usual type of phonograph cabinet and utilizes the driving mechanism of the phonograph for operating the motion picture device. This device is directly driven from the turntable and makes possible the reproduction of pictures in synchronism with the sound producing record. The arrangement is such that the motion pictures and record may be used at the same time or the pictures may be operated alone or the sound record may be operated alone, without impairing the efficiency of either arrangement.

Referring particularly to the drawings, 10 indicates the body of a phonograph cabinet having a top 11 surrounded by a ledge 12 and a cover 13 with a stay 14 of the usual type found in commercial phonographs. The phonograph turntable is indicated at 15 and the tone arm at 16, while 17 indicates the record placed on the turntable and 18 is the turntable stem, while 19 indicates the space enclosed by the hollow cover 13.

The motion picture device is indicated as a unit by the character 21 and is driven from the stem of the turntable by the shaft 22. 23, Figs. 1 and 5 indicates the screen which may be made from the usual screen material adapted for motion picture purposes and secured to the inside of the cover as indicated. 24 indicates a pad on the top of the motion picture device supported by the frame of the device in line with the edge of

the cover as indicated by the dotted line 25, Fig. 2, and acts as a protection to the mechanism in case the cover accidentally falls.

Referring to Fig. 3, a plate 31 is secured to the ledge 12 and to this plate 32 is slidably secured by screw 33. Plate 32 supports hinge 34, Fig. 12, one side of which is extended to come below the supporting frame 38 of the motion picture device 21. This frame is pivotally secured to the hinge member by nut 37 and may be rotated thereon. One side of the hinge member 34 has a stop 26 which, when in the position shown in Fig. 4, holds the motion picture device horizontal and clear of the turntable and record. When the motion picture device 21 is turned over to the vertical as indicated in Fig. 4, the base plate 35 rests upon the top of ledge 12, thereby forming a rigid support. When in the position shown in Fig. 5, the device may be slid back and forth on ledge 12 by means of screw 33 and when in this position it can be turned at right angles corresponding to the position shown in Figs. 1 and 2, turning the lens to project the pictures on the cover of the cabinet. This device can also be turned in the opposite direction, if desired, and project the pictures on a screen, especially provided for the purpose.

The pictures are provided on a record or drum 41 mounted on a hub 42 and consisting of a series of leaves 43, Fig. 9 upon which the picture 44 is placed. The picture itself may be printed on the leaves. However, I prefer to make the picture separate from the leaves indicated at 45 and hold it in position by folded over edges and clefts, as indicated at 46. This construction enables the picture to be produced on a paper stock best adapted for this purpose and enables the leaves to be produced from a paper stock best adapted for the conditions of operation. Moreover, it enables picture records to be assembled from a supply of pictures and for this purpose the leaves may be numbered consecutively and the pictures correspondingly numbered, so that they can readily be assembled.

The top edges of the leaves as shown in Fig. 7 are engaged by the projection 47 secured to plate 48 which is adjustably secured to the casing by the screw 49. The drum is rotated in the direction indicated by the arrow and projection 47 releases the leaves one at a time as the drum is moved forward, thus bringing a new picture into the light zone as each leaf turns over to be projected through the lens as indicated. The object of adjusting the position where projection 47 releases the picture is to obtain the best possible position for the pictures relative to the screen upon which they are to be projected and also to adapt the mechanism to drums that may have some variations in diameter.

The light for illuminating the pictures is contained in the angular bracket 51 which houses an electric bulb 52 connected in circuit by the electric cord 55 with a source of supply. Behind this lamp a reflector 53 is provided and a plano-convex lens 54 may or may not be used to centre the light on the picture area 44.

The pictures are projected from reflected light obtained from the lamp 52 through the lens mechanism 61 which may consist of lenses 62 and 63 adjustable relative to each other to obtain the proper focus. This lens mechanism is preferably secured by bracket 64, Fig. 10, secured by a screw 66, Fig. 8, through slot 65, to the side of the mechanism. This enables the lens to be rotated through an arc for focusing purposes and for directing the light upon the screen.

The driving mechanism as shown is obtained from the stem of the turntable by a spring clutch device which can be inserted on the stem after the record is in place and by means of bevel gears 71, universal joint 72, spline 73, shaft 22 and universal joint 74, Fig. 6 drives the worm 75 supported in the frame 76 which is adjustably positioned by screw 77 in the slot as shown. This worm engages worm wheel 78 which drives friction clutch member 79, Fig. 11, held in engagement by flat spring 80. The drum is supported by a shaft 82 passing through the hub 42 and having a square section 81, fitting the clutch member 79. This shaft has a key 83 fitting a groove 84 in the hub 42, Fig. 7, so that when the shaft is fully inserted the hub and the picture drum are driven from the stem of the turntable through a friction clutch. One side of the casing 91, surrounding the picture drum is removable and may be latched in position by cleat 92, secured to the frame 38 as shown in Fig. 7, so that this portion of the casing and shaft 82 are removed when changing picture records. The first record of a picture may have a mark or color as indicated at 95 Fig. 7, and when the record is inserted shaft 82 should be turned by the knurled knob at the end until this picture is in the releasing position and when started with the starting groove of the sound record the two will move in synchronism.

The driving mechanism is preferably made of a solid rod using universal joints. As indicated in Fig. 6, the spline 73 accommodates the driving rod to different sizes of machines and the angular position of worm 75 is made adjustable so as to align approximately with the driving shaft.

The embodiment of the mechanism shown by this disclosure is suitable for one type of apparatus. However, for other types it will be found desirable to increase the amount of illumination and provide lamp brackets on each side of the picture drum. Also it may

be found desirable to place the driving mechanism and the lamp on the same side of the casing supported by a suitable frame and support the drum on a stud dependent from the frame so that the entire cover of the side may be removed for adjusting purposes and for replacing picture records.

The standard speed with which a phonograph turntable rotates is approximately eighty revolutions per minute. The picture drum in the present invention is made of a diameter sufficiently large to contain enough pictures when projected at a speed common in devices of this kind to maintain the motion pictures during the time the sound record is played. This means that the picture drum rotates at a very slow rate as compared with the turntable and therefore has very little appreciable effect in retarding the rotation of the turntable. There will be considerable back lash in the mechanism due to the great reduction in speed between the picture drum and the turntable. However, as most sound records have a certain initial movement in blank grooves before the sound producing grooves are reached, this portion of the record will take up the back lash and the pictures will automatically come into operation concurrently with the phonograph record.

While this invention is shown as an attachment for phonographs and operated by a phonograph mechanism, it is quite apparent that it may be used alone as an amusement and instructive device and is capable of producing pictures of a size suitable to be seen from any point of an ordinary room. The comparatively small size of the pictures projected enables the apparatus to be successfully operated from a limited source of illumination and therefore does not introduce any fire hazard.

This invention discloses a picture drum rotated from the stem of a phonograph turntable. This, however, is not claimed as a feature of the present invention which is confined to an application of this principle for projecting pictures so produced and providing a mechanism that can be enclosed within the cover of the casing also that the same cover may be used as a screen upon which the pictures are reproduced.

Having thus described my invention, I claim:

1. In a motion picture projector, the combination of a casing with a hinged cover, a motor within said casing for operating the projecting device, means embodied in said projecting device arranged to engage said casing for positioning said device to project pictures upon said cover when the latter is open so that the axis of projection is substantially perpendicular to said cover and flexible driving means connecting said motor with said projecting device.

2. A device including a motion picture projector comprising a casing with a cover for housing said projector, means for securing said picture projector to said casing, means whereby said projector may be positioned above the plane of said cover and means for projecting pictures from said projector upon the inside of said cover when the latter is open.

3. A device including a motion picture projector comprising a casing with a cover for housing said projector, hinged and pivoted means for securing said projector to said casing whereby it may be positioned to close below said cover and positioned outside the plane of said cover to project pictures upon the inside of said cover when the latter is opened in a substantially vertical position.

4. A device including a motion picture projector comprising a casing with a hinged cover, said casing arranged to house said projector immediately below said cover and the inside of said cover arranged when opened substantially in the vertical position to act as a projecting screen for the pictures from said projector.

5. A device including a motion picture projector comprising a casing with a cover for housing said projector, a hinged bracket secured to said casing and supporting said projector whereby said projector may be placed in a horizontal position to enclose below said cover and may be placed in a vertical position for projecting purposes.

6. A device including a motion picture projector comprising a casing with a cover for housing said projector, a hinged bracket secured to said casing, said projector pivotally supported by said bracket whereby it may be placed in a position to enclose below said cover and may be placed in a vertical position and turned in any direction for projecting purposes.

7. A device including a motion picture projector comprising a casing with a cover for housing said projector, a hinged bracket secured to said casing opposite the hinged side of said cover, said projector pivotally supported by said bracket and having a position to enclose within said cover and a projecting position, means including said bracket whereby said device may be positioned to enclose in said casing when said cover is shut and whereby said device is placed in the projecting position to project pictures on the inside of said cover when the latter is open.

8. A device including a motion picture projector comprising a casing with a cover for housing said projector, a motor for operating said projector included in said casing, pivoted means for securing said projector to said casing whereby it may be positioned to project pictures horizontally upon

a screen and means for connecting said motor with said projector.

9. In a motion picture projector, the combination of a casing with a cover, a motor within said casing for operating the projecting device, means embodied in said projecting device arranged to engage said casing for positioning said device to enclose below said cover and for positioning said device to project pictures upon said cover when the latter is open so that the axis of projection is substantially perpendicular to said cover and driving means connecting said motor with said projecting device.

10. In a motion picture projector, the combination of a casing with a cover for housing said projector, a motor for operating said projector fixed within said casing, pivoted means for securing said projector to said casing whereby it may be positioned below the plane of said cover and positioned to project pictures so that the axis of projection is horizontal upon a screen and means for connecting said motor with said projector when in the projecting position.

11. A device including a motion picture projector comprising a casing with a cover, means for supporting said projector on said casing in the plane through which said cover shuts and for projecting pictures on said cover and means on said projector against which said cover abuts arranged to take the thrust from said cover.

12. A device including a motion picture projector comprising a casing with a cover, said projector mounted to slide on said casing at right angles to said cover and means for projecting pictures from said projector directly upon said cover.

13. A motion picture projector comprising a rotor with picture leaves arranged about its centre, a lens for projecting said pictures, a drum for enclosing said rotor, said lens secured to said drum and angularly adjustable on said drum.

14. A motion picture device comprising a rotor with picture leaves arranged about its centre, a drum for snugly enclosing said rotor, a source of light for illuminating said pictures, said light enclosed in a housing with a reflector angularly disposed and connected to said drum and a lens for projecting said pictures.

15. In combination, a motion picture device having a casing housing a motor with a vertical stem carrying a turntable, a projecting device comprising a rotor with picture leaves arranged about its centre and adjustably positioned on said casing, a worm drive for said rotor and means connecting said drive with said stem.

16. A motion picture device comprising a casing having a motor, a projecting device comprising a rotor in a frame with picture leaves arranged about its centre and adjustably positioned in said casing, a worm drive for said rotor, said drive capable of being angularly positioned relative to said frame and means connecting said worm and said motor.

17. A portable motion picture device comprising a rotor with picture leaves arranged about its centre, a drum snugly enclosing said rotor, a source of light angularly disposed to and supported by said drum for illuminating said pictures, a lens adjustably secured to said drum in front of said illuminated picture for projecting said picture directly upon a screen and a means for automatically rotating said rotor.

Signed at New York, in the county of New York and State of New York, this 4th day of February, A. D., 1921.

MATTHEW H. LOUGHRIDGE.