Oct. 3, 1961 A. E. FEINBERG ET AL 3,002,263

ELECTROMAGNETIC CORE CONSTRUCTION AND METHOD

Filed Dec. 14, 1954 2 Sheets-Sheet 1

Fig. 1.

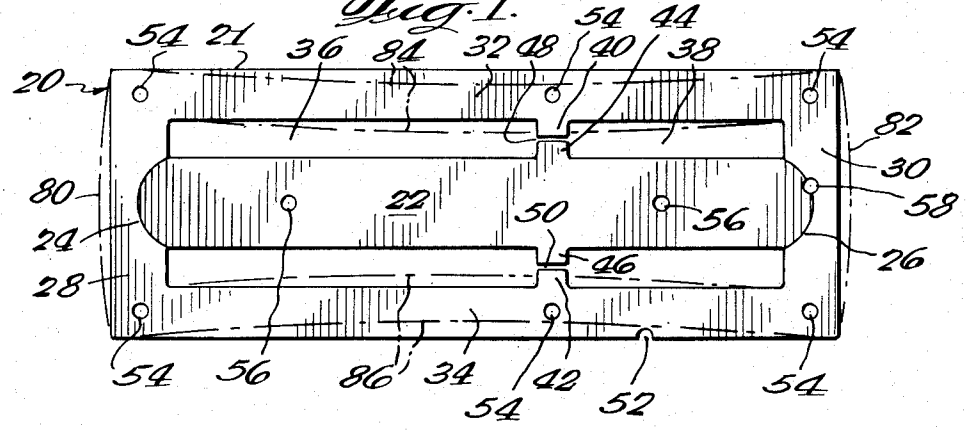

Fig. 2.

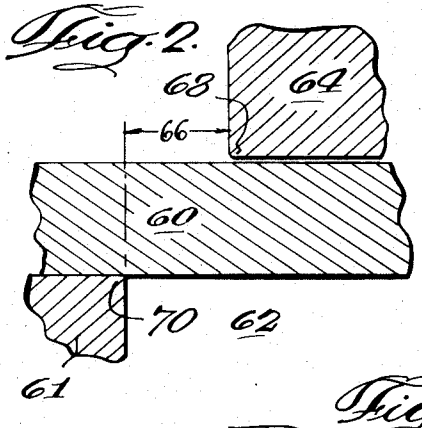

Fig. 3.

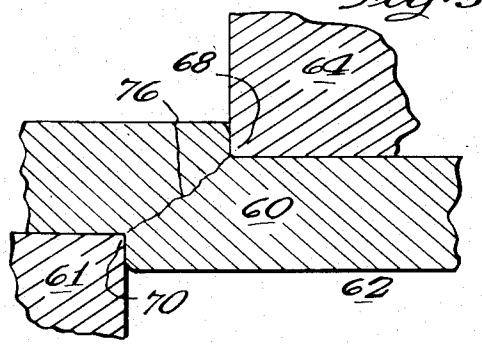

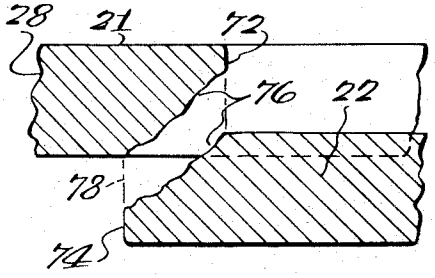

Fig. 4.

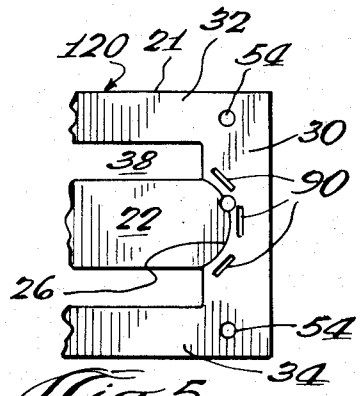

Fig. 5.

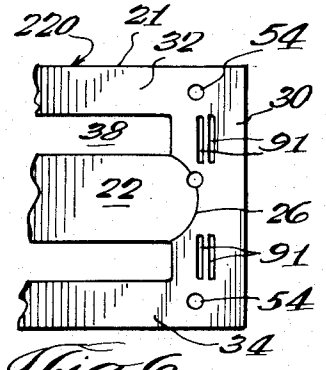

Fig. 6.

INVENTORS.
Albert E. Feinberg
Paul J. Zerwes
By Silverman + Mullin
Attorneys

Oct. 3, 1961 A. E. FEINBERG ET AL 3,002,263

ELECTROMAGNETIC CORE CONSTRUCTION AND METHOD

Filed Dec. 14, 1954 2 Sheets-Sheet 2

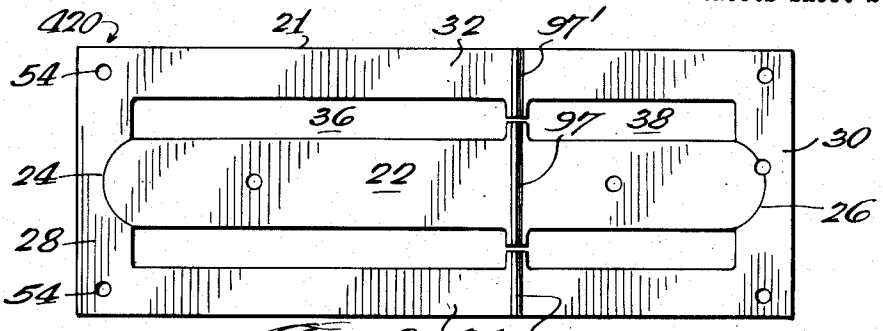

Fig. 8.

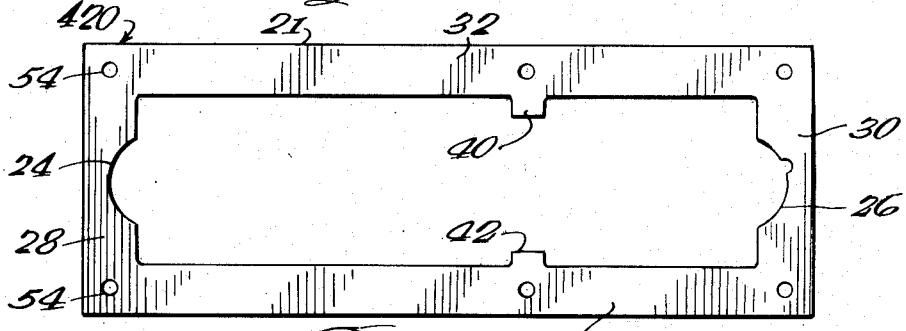

Fig. 9.

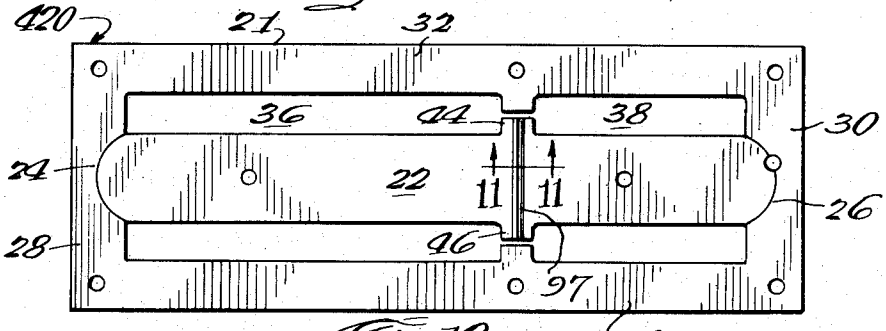

Fig. 10.

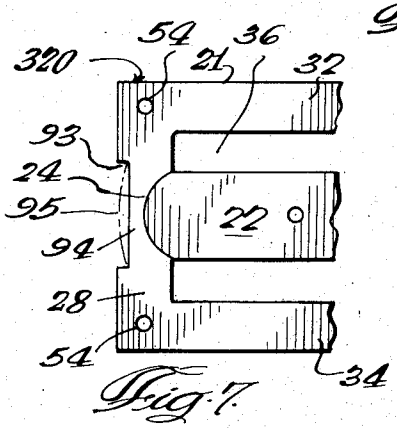

Fig. 7.



Fig. 11.

INVENTORS.
Albert E. Feinberg
Paul J. Zerwes
By Silverman & Mullin
Attorneys

United States Patent Office 3,002,263 Patented Oct. 3, 1961

3,002,263

ELECTROMAGNETIC CORE CONSTRUCTION AND METHOD

Albert E. Feinberg and Paul J. Zerwes, Chicago, Ill., assignors to Advance Transformer Co., Chicago, Ill., a corporation of Illinois

Filed Dec. 14, 1954, Ser. No. 475,043
4 Claims. (Cl. 29—155.61)

This invention relates generally to a core construction for electromagnetic devices such as transformers, chokes and the like and in addition is concerned with a novel method of constructing a core of this type.

The invention is particularly applicable to shell type cores constructed of laminations and in which there is a generally rectangular outer frame or shell, having elongate sides and ends bridging the sides, and in addition there is a central winding leg which is disposed between the ends extending the length of the interior of the outer shell. In practice, a core of this structure is formed of a stack of laminations, each stamped out of silicon steel sheeting, held together by rivets or clamps. The difficulties which will be referred to occur principally in the riveted cores but are not exclusive thereto. In stamping the individual laminations, the central winding leg lamination is punched out of the blank simultaneously that the windows and outer frame portions are formed. This may occur in a progressive sequence, with the various parts separated by the punch press.

Thereafter, the frame laminations and winding leg laminations are separately stacked and riveted together. The air gap or gaps are formed during the punching operations, usually by a cutting operation known as shaving. This operation establishes the dimensions of the air gap or gaps, by means of which the eventual electrical characteristics of the device are established. The stacked winding leg is now provided with pre-wound coils that are slipped over the ends and positioned in alignment with the windows of the shell or frame stack, and thereafter the assembled winding leg and coils are forced into the center of the frame or shell. Means are provided for positive alignment and seating of the central winding leg.

The above describes a method of producing the cores which is in common use. The further processing of the device is not involved in this invention.

Theoretically, since the central leg is re-fitted back into the opening formed when it was punched out, there should be no problem in so assembling the transformer or choke. Thus, predetermined gaps should not vary for any reason. This is not the case, however. In any shearing die which includes male and female portions, there must be clearance no matter how little. The workpiece is therefore acted upon above and below by shearing members which are moving along different parallel planes. A certain amount of cutting will take place, depending upon the sharpness of the die halves, but separation eventually occurs along a tear which extends diagonally from the contours defined by the male die portion to the contours defined by the female die portion. Considering the definition of the resulting pieces by the contours of the male portion of the die, the punched out part will have an outward extension, and the perforated part will have an undercut.

Obviously, fitting a single thickness of a winding leg lamination to a single thickness of a frame or shell lamination presents little or no problem. The aligned members are assembled in the direction opposite that in which they were separated during the punching operation. When a plurality of members are stacked, obviously there can be no nesting in assembling, since the largest contour of the one must pass the smallest contour of the

other during the pressing-in process, resulting in either crushing of the edges or deformation of one part or the other.

Since the stacked winding legs are engaged with the shells only at their ends, deformation which occurs during the pressing in of the central winding leg in practically all cases affects the bridging ends of the shell, bowing them outward. This results in distortion of the unsupported elongate side walls with resultant change in the gap dimensions. Thus the electrical characteristics of the device are changed resulting in unsatisfactory performance of the transformer or choke. Since die sharpness is an important factor and this varies, it is next to impossible to compensate for the change in gap thickness by, for example, shaving more material from gap forming extensions than necessary if there were no distortion.

It is the primary object of the invention to offset the above disadvantages otherwise inherent in the pressed-in shell type core structure, by preventing distortion of the elongate sides of the core during the pressing-in of the winding leg.

A further object of the invention lies in the provision of means on the bridging ends of the outer shell or frame of the core to prevent distortion of the elongate sides of the shells, and in connection with this object various means comprise weakened portions which will absorb or take on any distorting strain without transmitting the same to the sides.

A still further object of the invention lies in the provision of means on the central winding leg to accomplish the elimination of distortion in the elongate sides, and specifically the said means may consist of a formation shortening the length of said winding leg.

Still a further object of the invention lies in the provision of a novel method for accomplishing the shortening of the central winding leg.

Many other objects will occur to those skilled in the art as a description of the invention proceeds in which preferred embodiments of the invention have been described in some detail in order to comply with the patent statutes relating thereto. A preferred embodiment of the method has also been described.

In the drawings:

FIG. 1 is a top plan view of a lamination for a shell type core showing the manner in which the central winding leg portion matingly engages with the shell or frame portion and illustrating the conventional construction.

FIGS. 2 and 3 are diagrammatic views on a greatly enlarged scale showing in section what occurs in the punching operation during formation of the lamination of FIG. 1.

FIG. 4 is an enlarged and exaggerated sectional view showing the formation resulting along the edges of the parts of the lamination of FIG. 1 as a result of the punching operation.

FIGS. 5 and 6 are fragmentary plan views of the right hand ends of laminations formed in accordance with the invention to eliminate distortion of the sides of the shell core during the pressing-in operation.

FIG. 7 is a fragmentary plan view of the left hand end of another lamination formed in accordance with the invention and illustrating a third form.

FIGS. 8 and 9 illustrate steps in the formation of the lamination of FIG. 10, the latter illustrating a fourth form of the invention.

FIG. 11 is a sectional view along the line 11—11 of FIG. 10.

As stated above, the invention generally lies in preventing the distortion of the elongate sides of the shell of the core and thereby maintaining uniform gaps notwithstanding the "growing" of the winding leg laminations

during punching. In order to obtain a clear picture of the problems solved attention is invited to FIGS. 1 through 4.

FIG. 1 illustrates a lamination 20 having a shell or frame part 21 of rectangular construction, and a central winding leg portion 22 which is punched out of the same blank forming the lamination 20, with its ends matingly engaged at 24 and 26 with the bridging ends 28 and 30 respectively of the frame part 21. The sides are designated 32 and 34. Windows 36 and 38 are formed between the winding leg part 22 and the frame part 21 for the reception of the coils (not shown). The windows are separated by juxtaposed spaced apart extensions 40 and 42 on the frame part 21 extending inwardly toward the outwardly extending counterparts 44 and 46 on the winding leg part 22. The separation forms the gaps 48 and 50 the spacing of which is critical in most electromagnetic devices, since the reluctance of the shunt (that is the combined extensions and gaps) affects the reactive relationship between the coils in the respective windows.

The contours of the lamination 20 are identical to the contours of the transformer which is manufactured from a plurality of such laminations. Only the windings and fastening means are not shown. Thus, a predetermined number of parts 21 are stacked together in perfect alignment through the assistance of an indexing notch 52 on an edge of the side 34, and riveted together. Rivet holes are shown at 54. The same number of parts 22 are also stacked together and riveted, the rivet holes being shown at 56. An indexing hole 58, part of which is in the bridging end 30 and part of which is in the end of the winding leg part 22, serves the dual purpose of enabling proper alignment of the stack of winding leg parts 22 one with the other, and indicating proper alignment of the assembled stack of parts 22 with the assembled stack of parts 21. The direction of pressing-in of the winding leg into the frame is easily ascertained by reason of the burrs on both parts. The smooth surface of the winding leg stack is to be inserted into the burred side of the frame part stack.

As described thus far, the construction is conventional and the manner of inserting the winding leg in the core is well-known. This method of assembly gives rise to distortion of the sides 32 and 34 with attendant changes in the width of gaps 48 and 50.

In FIG. 2 there is illustrated a blank or workpiece 60 from which the lamination 20 is to be punched. For the sake of description, it will be presumed that the diagram illustrates in exaggerated dimension, the formation of the mating junction 24. The workpiece 60 is shown upon a lower die part 61 which has therein an opening 62 of the configuration of the winding leg part 22 (either with or without the windows). This is then the female portion of the die. The punch 64 is shown poised over the workpiece preparatory to being pressed upon the same and driven in to the opening 62. Obviously, it has the same contours as the opening 62, but must be slightly smaller to permit such downward movement. The clearance between die parts 61 and 64 is represented by the space 66.

As the male die part 64 is driven downward, the sharp edges 68 and 70 at first bite into the workpiece 60, giving rise to pure shear surfaces 72 and 74. This pure shear continues until the movement of the separating parts of the workpiece 60 produces a stress across the edges 68 and 70 that exceeds the tensile strength of the material. At this point the material yields, tearing across this diagonal along the line 76. The exact position of this tear surface (it is actually a surface formed about the edges of both of the separated pieces) depends upon many factors among which are: tensile strength of the steel, clearness 66 of the die parts, thickness of the workpiece 60, sharpness of the dies, type of workpiece padding, etc. The resulting pieces are illustrated in FIG. 4, forming the bridging end 28 and the end of the central leg part 22.

Although the illustration of FIG. 4 indicates that moving the two parts together along the dotted lines 78 would probably not result in the mating engagement of the parts of even a single lamination, it should be appreciated that the drawing is somewhat exaggerated. Nornormally it is not difficult to force the two together. The purpose is to show that the opening at 24 defined by the edge 72 of the part 21 is smaller than the contour of the winding leg 22 defined by the edge 74. Certainly the greatest distance between the mating junction 24—26 of the frame part 21 is substantially less than the greatest distance between the ends of the winding leg part 74. When a stack of winding leg laminations is forced into the center of the frame something must give.

It has been found that the bridging ends 28 and 30 tend to bow outward when the winding leg stack is pressed home. This is illustrated in exaggerated form by the broken lines 80 and 82 in FIG. 1. The resulting distortion of the stacked frame laminations is usually an inward bowing of the elongate sides. This is exaggeratedly illustrated by the broken lines 84 and 86. The inward bowing of the sides 32 and 34 of the frame stack will materially decrease the width across gaps 48 and 50, and as explained, the amount of change of the gaps will not be controllable. Material changes in electrical characteristics of the transformer or choke over original design will result from this alteration in gap dimension. Gap materials may in some way offset this change, but the forces applied are great and some change is bound to result notwithstanding.

In any event, electrical changes result from such distortion which in many cases are intolerable. The difficulties are aggravated where a close tolerance of gaps is required for some particular characteristic of the electromagnetic device, and where more than one gapped shunt is affected.

Generally the invention comprises providing some means to prevent distortion, and this takes two specific forms. In one form, there are provided means which will absorb deformations caused when the winding leg is pressed home. In a second form, the winding leg is shortened slightly during manufacture to compensate for its "growing."

In FIGS. 5 and 6, means are provided in the bridging end 30 capable of absorbing deformation. In the lamination 120 of FIG. 5 there is a series of slots 90 which are punched completely through the bridging end and generally are arranged at right angles to the forces exerted when the winding leg 22 is driven into place. Thus the slots are in an arc about the junction 26. The slots 90 provide a weakened portion in the bridging end which will be somewhat crushed, perhaps slightly closing the slots when the winding leg is pressed home. Obviously if the distortion is all localized in the bridging end 30, there will be no distortion or bowing inward of the sides 32 and 34 and the gaps 48 and 50 will be unaffected.

In the lamination 220 of FIG. 6, the slots 91 serve the same function as slots 90, but these are arranged geometrically different. A greater amount of weakening is provided at local areas adjacent the inner corners of the end member 30. The function and operation is the same as slots 90.

In slotting the end 30, care must be taken to provide sufficient iron to handle the normal flux designed to thread the core. Note that the width of the end 30 is larger in FIGS. 5 and 6 than in FIG. 1 for the same design of electromagnetic device. Obviously the slotting decreases the cross section in places. The exact number and formation of slots is a matter of design, probably best ascertained by experiment, especially in view of the complex nature of the electrical characteristics of this kind of apparatus. Care must be taken to avoid any areas where extreme high flux density may result in saturation.

In the lamination 320 illustrated in FIG. 7, instead of slotting the end 28, a shallow recess or notch 93 is formed

along the outer edge of the end, so that when distortion occurs as it might in forcing the winding leg home, the narrow strip **94** between the juncture **24** and the recess **93** will tend to bow out or flex as indicated at **95** rather than the entire bridging end **28**. The same salutary effects are obtained as in FIGS. 5 and 6.

In FIG. 10 there is illustrated a lamination **420** in which the construction is identical to that of the lamination **10** of FIG. 1 with one exception. There is a crimp **97** of simple formation which extends across the central winding leg part **22** at the extensions **44** and **46**. The crimp may be of any configuration **30** that a stack of members **22** will nest, one such formation being triangular in cross section as shown in FIG. 11. Obviously the crimp **97** will shorten the length of the winding leg **22** slightly, and thereby offset the "growth" thereof during stamping. This can prevent the distortion of the ends **28** and **30** during assembly of stacks. Obviously there must be no crimp in the frame portion **21**.

The crimp may be formed in the lamination **22** in any of a variety of ways and at any of the stages in the punching of the lamination, but for high speed production, a novel method of forming said crimp has been evolved. During the production of the lamination, at any suitable stage of the stamping operation, say during the first blanking step, or even before blanking, if desired, the entire lamination is crimped across the position of the shunt, that is, at the extensions **40**, **42**, **44** and **46**. The crimp is more easily formed in a large and imperforate member. Thereafter, the crimps **97'** in the sides **32** and **34** are flattened. The final result will be the same as FIG. 10. The illustration in FIG. 8 shows the lamination assembled together prior to the flattening of the frame part **21**. Obviously before this occurs, the winding leg part **22** drops out of the press so that FIG. 9 illustrates the result of the flattening step. By illustrating both parts **21** and **22** in FIG. 8 it is not intended to imply that the entire lamination is completely punched to shape before the crimps **97** and **97'** are formed (although this might be done). Preferably the crimping should be done at a stage of the progressive punching process at which there will be a minimum of distortion of the extensions forming the shunt and gaps.

The only reason for the crimp **97** being where shown in FIG. 10 is that it interferes least with the insertion of the stacked winding leg into the coils from opposite ends. The crimp **97** will, however, be quite small, and may be located in other places along the member **22** where convenience and practicability permit. Obviously there may be several crimps, if desired.

What it is desired to secure by Letters Patent of the United States is:

1. The method of manufacturing a shell-type core for an electromagnetic device in which the shell is formed from a plurality of pre-formed electrical steel laminations stacked and secured together such that the shell is substantially rectangular to provide a pair of parallel, continuous side parts and a pair of continuous end parts bridging the side parts, and an elongate continuous central winding leg part fitting into the interior of the shell with the extremities of the winding leg intimately abutting said end parts and said winding leg and side parts having lateral extensions located with end faces thereof aligned and separated to provide air gaps of predetermined dimension on opposite sides of the winding leg: said method comprising, stamping from a blank of electrical steel individual laminations of which one corresponds to the shape of the shell and the other corresponds to the shape of the winding leg with said winding leg having been stamped from the blank material between the bridging end parts of the shell lamination, forming at least a transverse crimp in the winding leg lamination to shorten same, said method being performed in a continuous process providing a plurality of said individual laminations capable of being so stacked and secured together so that the crimped winding leg laminations are accommodated on the interior of the shell laminations with the linear distance between the end parts in the core remaining substantially equal to the linear distance between the end parts of the individual shell laminations.

2. A method as described in claim 1 in which the crimp is located at the gaps.

3. A method as described in claim 1 in which said crimp is formed simultaneously with the stamping out of the laminations from the blank.

4. A method as described in claim 1 in which said crimp is formed in the blank prior to stamping out of the laminations therefrom.

References Cited in the file of this patent

UNITED STATES PATENTS

1,635,064	Wagner	July 5, 1927
2,303,187	Wood	Nov. 24, 1942
2,319,251	Mittermaier	May 18, 1943
2,488,961	Camilli	Nov. 22, 1949
2,489,625	Dornbush	Nov. 29, 1949
2,552,109	Nahman	May 8, 1951
2,553,554	Dierstein	May 22, 1951
2,562,693	Brooks	July 31, 1951
2,582,291	Sola	Jan. 15, 1952
2,621,539	Eustis et al.	Dec. 16, 1952
2,671,951	Sliwiak	Mar. 16, 1954
2,684,521	Morrison	July 27, 1954