United States Patent [19]

Strauch et al.

[11] **3,853,122**

[45] **Dec. 10, 1974**

[54] **METHOD AND DEVICE FOR ACHIEVING A PENILE ERECTION**

[76] Inventors: **Berish Strauch,** 3353 Bainbridge Ave., Bronx, N.Y. 10467; **Allan E. Bloomberg,** 340 E. 64th St., New York; **Selwyn Z. Freed,** 111 E. 210th St., Bronx, both of N.Y. 10021

[22] Filed: **Oct. 12, 1973**

[21] Appl. No.: **406,083**

[52] **U.S. Cl.** **128/79,** 3/1
[51] **Int. Cl.** **A61f 5/00**
[58] **Field of Search**..... 128/79, 92 R, 303 R; 3/1

[56] **References Cited**

UNITED STATES PATENTS

3,255,747 6/1966 Cochran et al. ..... 128/92 R

FOREIGN PATENTS OR APPLICATIONS

154,651 8/1932 Switzerland..... 128/79

OTHER PUBLICATIONS

The Bulletin (Dow Corning), R. Pearman, July 1966, p. 10.

Primary Examiner—Lawrence W. Trapp
Attorney, Agent, or Firm—Steinberg & Blake

[57] **ABSTRACT**

A method and device for achieving a penile erection. An elongated flexible elastic tube is implanted in the penis in the position extending longitudinally along the penile shaft, and simultaneously there is implanted a flexible container which contains a fluid to be transferred from the container into the tube when the container is compressed so that the fluid thus displaced into the tube will elongate the latter and render the tube relatively rigid so that in this way it is possible to achieve a penile erection. The container is implanted at a location where it can conveniently be manipulated, such as the scrotum or the lower abdominal region. The elongated flexible tube and the container which communicates therewith form the device of the invention, this device further including in the tube a suitable structure for delaying the return of the fluid under pressure from the tube to the container when the latter is released.

11 Claims, 8 Drawing Figures

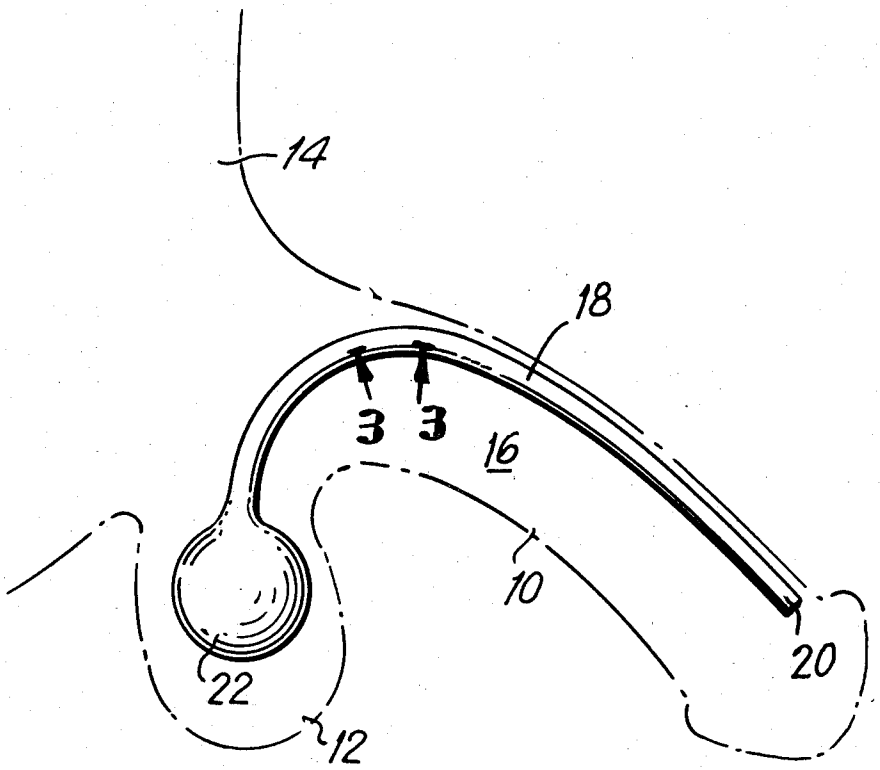

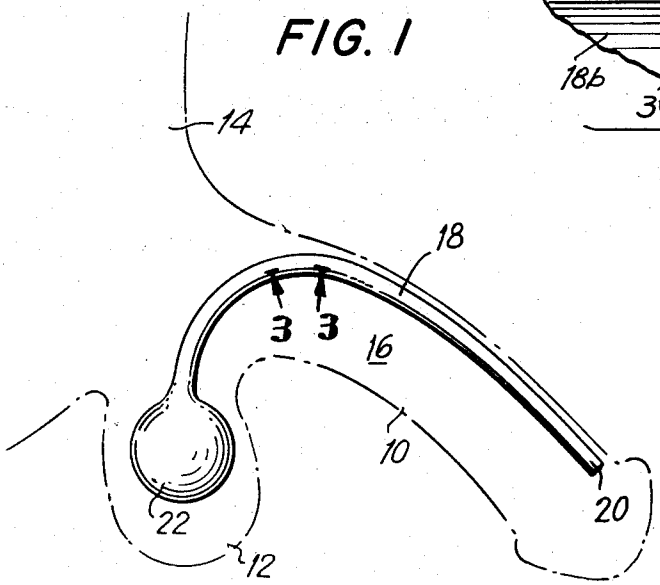

FIG. 1

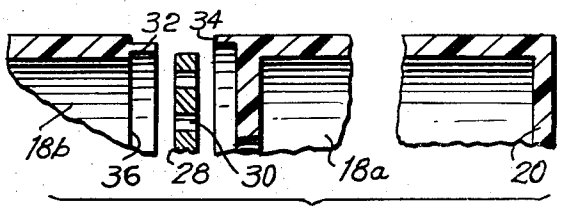

FIG. 2

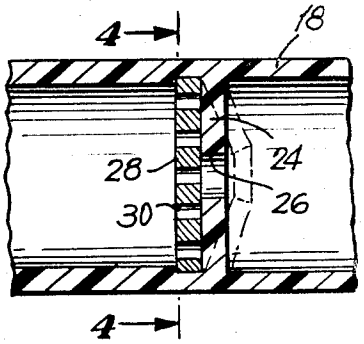

FIG. 3

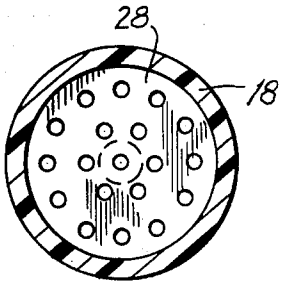

FIG. 4

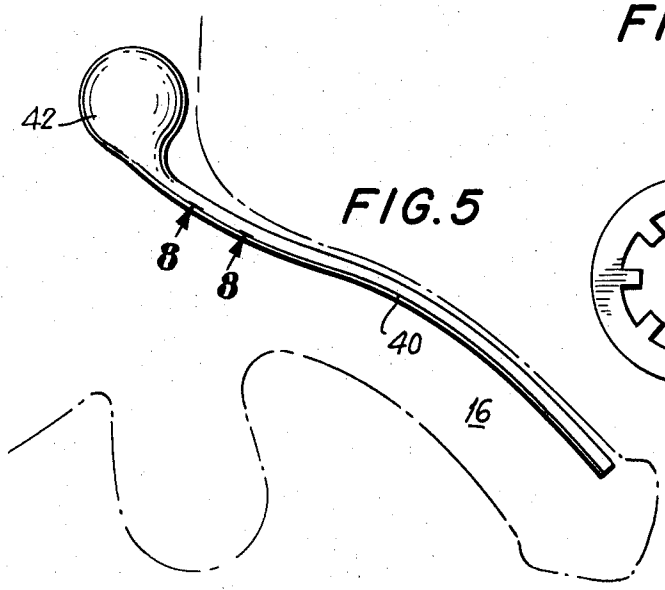

FIG. 5

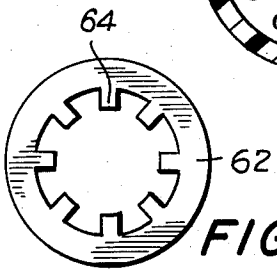

FIG. 7

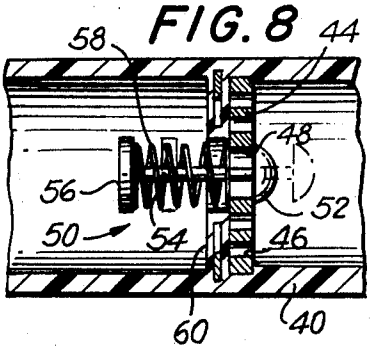

FIG. 8

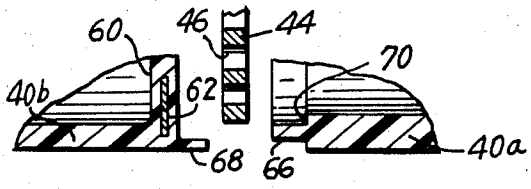

FIG. 6

METHOD AND DEVICE FOR ACHIEVING A PENILE ERECTION

BACKGROUND OF THE INVENTION

The present invention relates to methods and devices for enabling human adult males to achieve penile erections.

As is well known, some human adult males cannot perform sexually in a satisfactory manner either because they cannot achieve a penile erection or because an erection once achieved cannot be maintained. Various attempts have already been made to solve this problem. However, the previously known solutions to this problem have various drawbacks. For example, it is known to situate devices of various constructions at the exterior of the penis to lend rigidity to the latter, but this type of solution to the problem is completely unsatisfactory because of the presence of these devices at the exterior of the penis. It is also known to attempt to solve the problem by injecting certain substances into the body, but this type of solution to the problem also is unsatisfactory because in many cases it has no success and also because in many cases although it may be successful the desired result is only temporary and the inconvenience of repeated injections is present.

SUMMARY OF THE INVENTION

It is accordingly a primary object of the present invention to provide methods and devices for solving the above problem.

Thus, it is an object of the present invention to provide a method and device which will enable a human adult male to achieve a penile erection without requiring artificial devices to be situated at the exterior of the penis and without requiring injections into the body.

Also it is an object of the present invention to provide methods and devices which will reliably maintain the erection for a desired length of time.

Also it is an object of the present invention to provide methods and devices which will enable the human adult male to achieve the penile erection in a fully satisfactory and highly reliable manner whenever desired without any particular inconvenience.

According to the invention an elongated hollow tube of flexible, stretchable elastomeric material is implanted in the penile shaft extending longitudinally thereof, and simultaneously there is also implanted a flexible container which contains a fluid and which communicates with the tube, this container being implanted at a location where it can conveniently be manipulated so as to be compressed for displacing the fluid out of the container into the tube. In this way it is possible to stretch and elongate the tube and render it relatively rigid so that a penile erection will result. The return of the fluid under pressure from the tube to the container is delayed so that an erection will be maintained for a satisfactory period of time.

The device of the invention includes an elongated flexible elastomeric tube which has a front closed end and which has an open rear end communicating with a flexible container which contains a fluid to be displaced from the container into the tube when the tube is compressed. Between the front end of the tube and the container there is situated in the tube a delay means which delays the return of the fluid under pressure from the tube into the container.

BRIEF DESCRIPTION OF DRAWINGS

The invention is illustrated by way of example in the accompanying drawings which form part of this application and in which:

FIG. **1** shows one embodiment of a method and device of the invention, the device of the invention being shown in solid lines in FIG. **1** while the penis and scrotum are indicated in phantom lines;

FIG. **2** is a fragmentary partly sectional elevation showing in an exploded view parts of the device of the invention to illustrate how these parts are manufactured and assembled;

FIG. **3** is a fragmentary longitudinal sectional elevation of part of the tube of FIG. **1**, taken along line **3—3** of FIG. **1** in the direction of the arrows showing in particular the details of one embodiment of a delay means;

FIG. **4** is a transverse partly sectional view of the structure of FIG. **3** taken along line **4—4** of FIG. **3** in the direction of the arrows;

FIG. **5** is an illustration of another embodiment of a method and device of the invention with the device of the invention being shown in solid lines in FIG. **5** while the penis, scrotum and adjoining body regions are indicated in phantom lines;

FIG. **6** is a fragmentary partly sectional exploded illustration of part of the structure used in the device of FIG. **5**;

FIG. **7** illustrates an element used for adding stiffness to part of the structure of FIG. **5**; and

FIG. **8** is a fragmentary sectional elevation taken along line **8—8** of FIG. **5** in the direction of the arrows and showing in particular the details of that part of the structure of FIG. **5** which delays the return of fluid under pressure.

DESCRIPTION OF PREFERRED EMBODIMENTS

Referring first to FIG. **1**, there is schematically illustrated therein in phantom lines that part of a human adult male which includes the penis **10**, the scrotum **12**, and the lower abdominal region **14**. According to the method of the invention there is implanted in the penis **10**, in a position extending longitudinally along the upper interior part of the penile shaft **16** an elongated flexible and stretchable hollow tube **18** made of an elastomeric material. This tube **18** has a front closed end **20** which is fragmentarily illustrated in FIG. **2**. The flexible and stretchable elastic tube **18** is easily implanted by a surgeon in the position illustrated in FIG. **1** extending longitudinally along the interior of the penile shaft **16** at its upper region.

Distant from its front closed end **20** the tube **18** has a rear open end communicating directly with the hollow interior of a flexible container **22** which may be made of the same material as the tube **18**. This material may be any flexible stretchable material which has elastomeric properties and which is compatible with the body. For example material sold under the trade name Silastic may be used for this purpose. In the embodiment of the invention which is illustrated in FIG. **1** the flexible bulb or container **22** is conveniently situated in the scrotum **12** so that it is readily accessible for manipulation.

The flexible container **22** contains a fluid which is displaced out of the latter into the tube **18** when the container **22** is compressed so that in this way the fluid

will be under pressure within the tube **18** in order to elongate the latter and render the tube **18** relatively rigid, so that in this way the penis **10** is rendered substantially rigid and straight thus providing the desired erection. The fluid within the container **22** and the tube **18** can simply be air. However, it is also possible to introduce into the container **22** a liquid such as a silicone oil which can be displaced out of the interior of the container to the tube **18** in order to stretch the tube **18** and render it more rigid.

Of course, if the structure included only the tube **18** and the container **22** then immediately upon release of the container **22** the fluid under pressure in the tube **18** would flow back into the container **22** so that the erection could be maintained only as long as the container **22** was manually compressed by manipulation through the exterior surface of the scrotum wall. In order to avoid the inconvenience of requiring the container **22** to be maintained manually in its compressed condition, the tube **18** is provided at the region of the rear end of the penile shaft with a delay means which delays the return of the fluid under pressure from the tube **18** back into the container **22**. This delay means may take the form shown in FIG. **3**. Thus, as may be seen from FIG. **3**, the hollow tube **18** is provided rearwardly of the front closed end **20** with a flexible transverse wall **24** provided with a central aperture **26**. Situated next to the rear surface of the flexible transverse wall **24** is a plate **28** made of any suitable metal or plastic and formed with a plurality of openings **30**. As is apparent particularly from FIG. **4**, all except the central opening **30** of the plate **28** are normally covered and closed by the flexible transverse wall **24**. Thus, with this construction when the operator compresses the container **22** to displace fluid out of the latter into the tube **18**, the fluid under pressure easily deflects the flexible wall **24** away from the plate **28** as illustrated in phantom lines in FIG. **3**, so that the fluid readily flows into the tube **18** between the front wall **20** and the flexible wall **24**. When the container **22** is released, the fluid under pressure will seek to push the flexible wall **24** against the plate **28** so as to close all except the central opening **30**. This central opening **30** is relatively small so as to throttle the return of fluid, and in this way the return of the fluid is retarded so that a considerable period elapses before the erection is lost. In this way it is possible to maintain the erection automatically for a considerable period of time, without requiring the operator to maintain the container **22** in its compressed condition.

In order to provide the structure shown in FIG. **3**, the tube **18** initially is made of a pair of components **18*a*** and **18*b*** (FIG. **2**). Component **18*b*** has a forwardly directed lip **32** while the tubular portion **18*a*** has a rearwardly directed lip **34**. The lip **32** surrounds a shoulder **36** against which the plate **28** is placed. Thus the outer diameter of the plate **28** is somewhat greater than the inner diameter of the tubular portion **18*b*** and the outer periphery of the plate **28** is engaged by the inner surface of the lip **32**. This lip **32** is then situated within and surrounded by the lip **34**, so that the parts when assembled will have the condition illustrated in FIG. **3**, and then the plastic material of the tubular portions **18*a*** and **18*b*** are fused to each other so that they become welded together in order to provide the construction shown in FIG. **3**. Of course it is possible instead to use any suitable cement or the like in order to connect the tubular portions **18*a*** and **18*b*** to each other.

Another method and device of the invention is illustrated in FIGS. **5–8**. Thus, as may be seen from FIG. **5**, the device illustrated therein includes an elongated flexible tube **40** which may be made of the same material as the tube **18**. This tube **40** also has a front closed end and a rear open end communicating with a flexible container **42** which may be identical with the container **22**. However, according to the method of the invention illustrated in FIG. **5**, the container **42** is subcutaneously implanted at the region of the lower abdomen just above the penile shaft **16**. The tube **40** is implanted in the same way as the tube **18**. Thus with this embodiment the operator need only push against the lower abdomen in order to compress the tube **42** and thus displace fluid out of the latter into the tube **40** thus elongating the tube **40** and rendering the latter rigid so as to achieve in this way the desired erection.

According to the embodiment of FIGS. **5–8** there is also a delay means for delaying the return of fluid under pressure from the interior of the tube **40** into the container **42**. Of course the fluid used in the embodiment of FIG. **5** may be the same as the fluid of FIG. **1**. However, the delay means is constructed differently. As may be seen from FIG. **8**, the tube **40** also carries a transverse plate **44** which is formed with a number of outer openings **46** as well as a central large opening **48**. This opening **48** has the flow of fluid therethrough controlled by way of a non-return valve means **50**. This valve means **50** includes the valve member **52** which engages the front surface of the plate **44** at the side thereof directed toward the closed front end of the tube **40**, and the valve member **52** is large enough to completely close the central opening **48**. A stem **54** is fixed to and extends rearwardly from the valve member **52** through the opening **48**. At its rear end the stem **54** is fixedly connected with a plate **56**. This plate **56** is engaged by the left end of a coil spring **58**. The spring **58** is coiled around the stem **54** and engages the rear surface of the plate **44**. Thus the non-return valve means **50** normally assumes the closed position shown in solid lines in FIG. **8**. However, when the container **42** is compressed the fluid under pressure will open the valve means so that the fluid can readily flow into the tube **40** between the closed front end thereof and the plate **44**. However, when the fluid seems to return the closed valve **50** prevents the return of fluid through the opening **48**.

The plate **44** has its openings **46** which surround the central opening **48** normally closed by a transverse wall **60** which forms part of the tube **40**. This transverse wall **60** is made of the same material as the tube **40** and normally is not of sufficient rigidity to maintain the openings **46** closed against the pressure of the fluid between the plate **44** and the front closed end of the tube **40**. Therefore, the wall **60** has embedded therein a springy ring **62** made of a material such as stainless steel and provided with a number of inwardly projecting springy tongues **64**, as shown in FIG. **7**. As a result of this construction the ring **62** and its tongues **64** increase the resistance of the wall **60** so that it does not yield response to the pressure of the fluid in the tube **40** between the plate **44** and the front closed end of the tube, and thus the erection may be maintained as long as desired with this construction. However, when it is desired to eliminate the erection, the tube **40** will be milked rearwardly by suitable manipulations along the penile shaft **16**. This pinching and rearward milking applied to the tube

40 forces the fluid rearwardly through the openings **46** with a pressure sufficient to deflect the wall **60** in opposition to the force of the tongues **64** away from the openings so that through this action it is possible for the operator manually to terminate the erection.

FIG. **6** illustrates how the construction of FIG. **8** may be manufactured. Thus, the tube **40** initially is formed of a pair of tubes **40***a* and **40***b*. The tube **40***a* has a rearwardly extending lip **66** while the tube **40***b* has a forwardly extending lip **68** adapted to surround the lip **66** when the parts are assembled. The plate **44** is surrounded by the lip **66** and engages the shoulder **70** of the tubular portion **40***a*. When the tubular portion **40***b* is manufactured with the transverse wall **60**, the ring **62** is embedded in the wall **60**. Thus, when the parts are assembled they will have the condition shown in FIG. **8**, and the lips **66** and **68** are fused to each other so as to weld the assembly into the construction shown in FIG. **8** or any suitable cement may be used to adhere the lips **66** and **68** to each other.

Thus, with the construction of the invention it is possible to provide by implanting a human adult male with the capability of achieving a desired erection whenever desired without, however, requiring any additional components to be situated at the exterior of the penis and without in fact altering the exterior appearance of the penis or the region surrounding the latter. No injections are required. All that is required is that the individual manipulate the container **22** or **42** so as to displace the fluid out of the latter into the tube which has been implanted in the penis in order to provide the desired erection. Moreover, this erection will be maintained for a desired length of time by way of the delay means of the invention as described above.

What is claimed is:

1. In a method for providing a human male adult with the capability of achieving a penile erection, the steps of implanting in the penis of the human male adult in a position extending longitudinally along the penile shaft an elongated flexible hollow tube of stretchable elastomeric material which will assume an elongated substantially straight and substantially rigid condition when supplied at its interior with fluid under pressure and which will assume a shorter more flexible condition when emptied of the fluid under pressure, and simultaneously implanting in the human male at a location where it is accessible for manipulation a flexible container which contains the fluid and which communicates with the tube so that by manipulation the human male can reduce the volume of said container to transfer fluid therefrom into said tube to situate the fluid under pressure in the latter for providing a penile erection.

2. In a method as recited in claim **1** and wherein the container is placed in the scrotum.

3. In a method as recited in claim **1** and wherein the container is placed in the lower abdominal region just above the penis.

4. In a method as recited in claim **1** and including the step of delaying the return of fluid from said tube to said container when the latter is released.

5. In a method as recited in claim **4** and wherein the fluid under pressure is returned from said tube to said container upon release of the latter at a rate which is substantially slower than the rate at which the fluid flows from the container to the tube when the container is compressed.

6. In a method as recited in claim **4** and wherein the fluid under pressure is retained in said tube until the adult human male manipulates the tube for forcing the fluid under pressure out of the latter back into the container.

7. In a method as recited in claim **6** and wherein the fluid under pressure is returned from said tube to said container in response to milking of said tube backwardly along the penile shaft to displace the fluid under pressure out of the tube.

8. An implant for enabling a human male adult to achieve a penile erection, comprising an elongated tube of stretchable elastomeric material having a front closed end, a flexible container for containing the fluid, said container being operatively connected with and having its interior in communication with the interior of said tube so that when said container is compressed to reduce the volume thereof fluid will be displaced out of said container and into said tube to stretch the latter and increase the rigidity of said tube, said container communicating with said tube at a location situated rearwardly of said front closed end of said tube, and delay means situated in said tube rearwardly of said front closed end thereof between said tube and container for permitting substantially free flow of fluid under pressure from said container into said tube when said container is compressed while delaying return of fluid from said tube to said container when said container is released.

9. The combination of claim **8** and wherein said tube has a rear open end with which said container communicates.

10. The combination of claim **8** and wherein said delay means includes an inner flexible transverse wall situated within and extending across the interior of said tube between said front closed end thereof and said container and said transverse wall being formed with a substantially central aperture and a plate situated in said tube next to said transverse wall thereof at the side of said transverse wall which is directed toward said container and away from said front end of said tube, said plate being formed with a relatively large number of small openings most of which are normally covered and enclosed by said transverse wall, so that when the container is compressed the fluid from the latter will deflect said wall away from said plate to provide for substantially free flow of fluid into said tube between said front end thereof and said transverse wall, while the fluid situated between said front end of said tube and said transverse wall will push the latter against said plate to close most of said openings, thereby permitting the fluid to return to said container at a rate which is substantially slower than the rate of flow of the fluid into said tube when said container is compressed.

11. The combination of claim **8** and wherein said delay means includes a plate extending transversely across the interior of said tube between said front open end thereof and said container, said plate carrying at a central region a non-return valve means which provides for substantially unobstructed flow of fluid from said container into said tube between said plate and front end thereof when said container is compressed while preventing flow of fluid back from the space between the front end of said tube and said plate, said plate being formed with a plurality of openings surrounding said non-return valve means, and wall means situated in said tube in engagement with said plate at the side

thereof which is directed away from said front closed end of said tube and normally closing said openings of said plate, said wall means having sufficient rigidity to prevent the fluid under pressure between said plate and front end of said tube from flowing through said openings while the rigidity of said wall means is insufficient to prevent the said wall means from being deflected rearwardly away from said plate when the tube is manipulated to force the fluid rearwardly through said openings of said plate.

* * * * *