Oct. 13, 1931. E. M. HEATHMAN 1,827,521

WATER HEATER

Filed Feb. 11, 1930 2 Sheets-Sheet 1

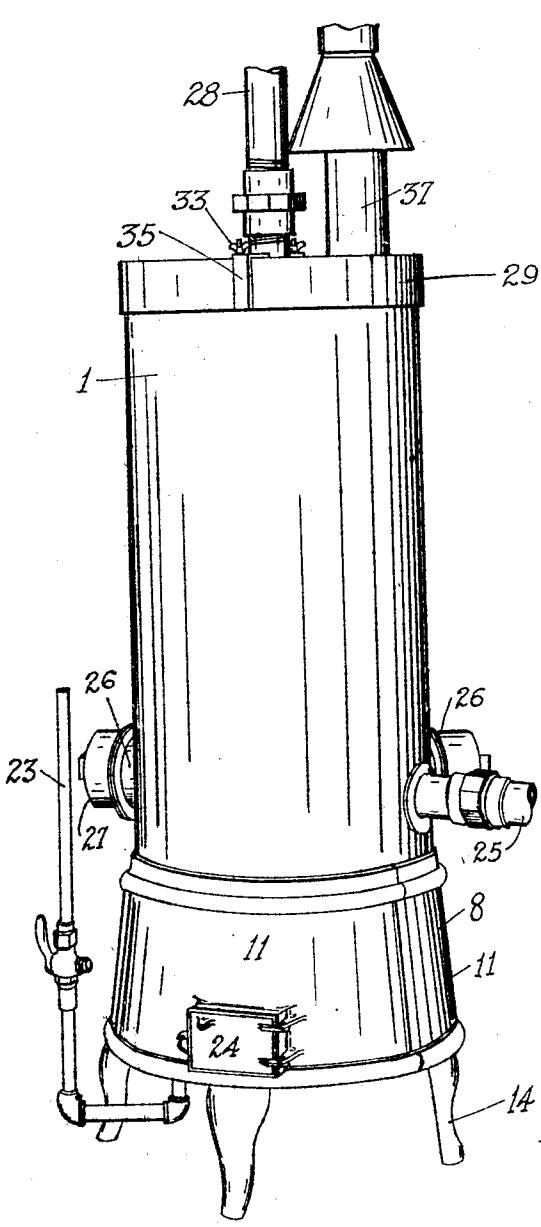

Fig. 1

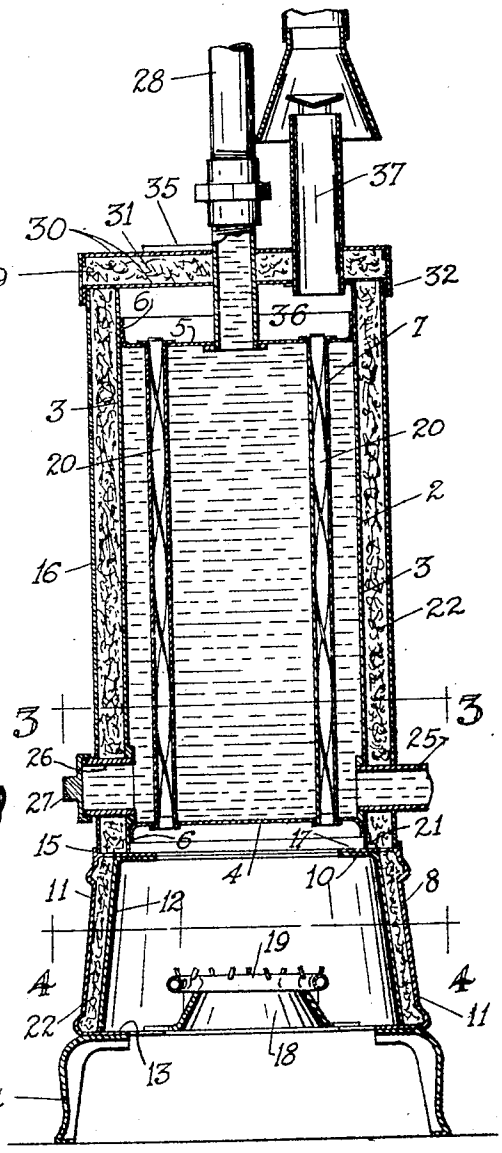

Fig. 2

Inventor

E. M. Heathman

By W. D. Mcdowell

Attorney

Oct. 13, 1931. E. M. HEATHMAN 1,827,521

WATER HEATER

Filed Feb. 11, 1930 2 Sheets-Sheet 2

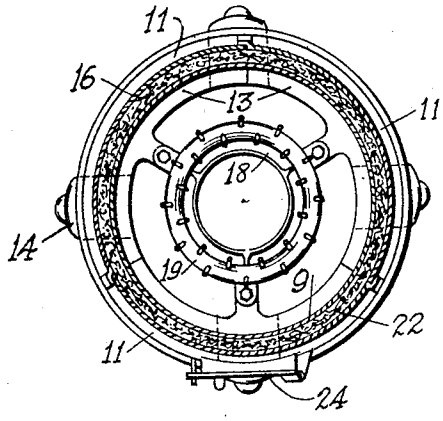

Fig. 4

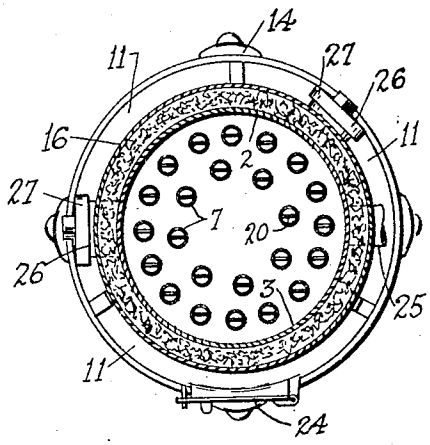

Fig. 3

Fig. 5

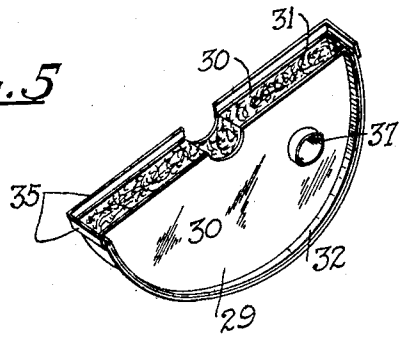

Fig. 6

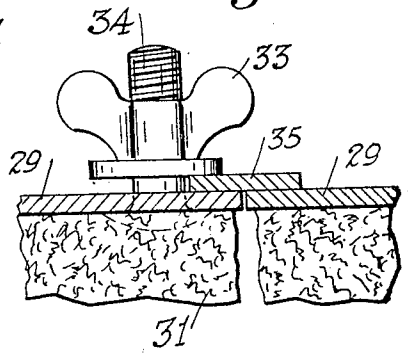

Inventor

E. M. Heathman

By W. D. M. Howell

Attorney

Patented Oct. 13, 1931

1,827,521

UNITED STATES PATENT OFFICE

EDWARD M. HEATHMAN, OF COLUMBUS, OHIO, ASSIGNOR TO F. O. SCHOEDINGER, OF COLUMBUS, OHIO

WATER HEATER

Application filed February 11, 1930. Serial No. 427,609.

This invention relates to improvements in water heaters and has particular reference to that type of water heater used in buildings for heating water supplied from city mains satisfactorily, quickly and efficiently to desired temperatures.

It is a primary object of the present invention to provide a water heater of improved design, economical to operate and possessing improved features of construction whereby the life of the heater is both prolonged and waste in the matter of heat production and consumption avoided.

With these and other objects in view which will appear as the description proceeds, the invention consists in the novel features of construction, combinations of elements and arrangements of parts hereinafter to be fully described and pointed out in the appended claims.

In the accompanying drawings:

Figure 1 is a perspective view of a water heater constructed in accordance with the present invention,

Figure 2 is a vertical longitudinal sectional view taken through the heater,

Figure 3 is a transverse horizontal sectional view on the line 3—3 of Figure 2,

Figure 4 is a similar view on the line 4—4 of Figure 2,

Figure 5 is a detailed perspective view of one of the cover members, and

Figure 6 is a detailed sectional view illustrating the connecting means between the cover members.

Referring more particularly to the drawings, the numeral 1 designates my improved heater in its entirety. The heater is formed to include a water containing and heating tank 2 which comprises an outer cylindrical metallic wall 3, a bottom wall 4 and a top wall 5. The walls 4 and 5 are provided with vertically turned flanges 6 which are welded to the inner surfaces of the wall 3 at points contiguous to but within the ends of the outer wall 3. The walls 4 and 5 are employed to effect the support of a plurality of spaced and circularly arranged gas conducting tubes 7 which are provided with open ends and through which heated gases pass from the fire box of the heater, the heat of said gases being transferred through the walls of the tube 7 to the body of water arranged within the tank 2.

To effect the support of the tank in a vertical position, I provide a base structure 8 which comprises an inner collar 9, terminating at its upper edge in an inwardly directed horizontal flange 10. Surrounding the collar 9 and suitably spaced therefrom are a plurality of segmental sections 11 which, when in an assembled form, constitute the outer walls of the fire bowl, but which are spaced from the adjacent walls of the collar 9, comprising the inner section of the fire bowl 12, in order that insulation of a character resisting heat transmission may be placed between the spaced walls of the sections 9 and 11, as indicated in Figure 2. By forming the outer portion of the fire bowl in a number of segmental sections facility is to be had in the matter of assembling the heater.

The sections 11 are formed at their lower edges to present inwardly directed horizontal flanges 13 upon which the lower edge of the collar 9 rests and is supported. Supporting legs 14 are secured to the flanges 13 and space the fire bowl from the floor or other supporting surface. The upper edges of the sections 11 are shouldered as at 15 to produce a seat for the reception of the lower edge of the outer cylindrical body wall 16 of the heater. Also, the upper edges of the sections 11 are formed with inturned horizontal flanges 17 which overlay the flanges 10 provided in connection with the collar 9. The flanges 13 of the sections 11 support a burner mounting 18 which carries a gas burner 19 of any desired type. The mounting 18 is of an open character in order that air may be drawn freely into the fire bowl to promote the combustion of the fuel gases. These highly heated gases then travel upwardly through the tubes 7, heating the walls of the latter and consequently the water or other fluid in the tank 2. Channeling of the gases during their passage through the tubes 7 is avoided by the provision of helically twisted baffles 20, which impart a swirling or rotary motion to the heated gases during their passage through the tubes

to effect better contact of said gases with the walls of the tubes.

It will be observed that by extending the flanges 10 and 17 inwardly and horizontally they serve to protect the weld formed between the flange of the bottom wall 4 and the outer wall 3 of the tank. In previous types of heaters of this kind this weld has been exposed directly to the heat of the burning gases in the fire bowl, with the result that the metal surrounding the weld is overheated and leaks promptly occur. Such overheating of the metal readily occurs for the reason that the weld is spaced from the water contained in such tanks and the heat is not carried away with the rapidity proportionate to that which obtains in the welds between the lower ends of the tubes and the bottom wall of the tank. The water is close to these latter welds and therefore excessive heating is avoided but unless the outer weld is protected, as by the employment and construction of the flanges 10 and 17, leaks are very apt to occur.

The outer wall 3 of the tank is welded to angles 21 mounted on the upper surfaces of the flanges 17 so that the tank construction is maintained stable on its supporting base. The outer body wall 16 is spaced from the wall 3 of the tank, and the annular space thus formed is filled with a material capable of resisting heat transmission. In this manner losses of heat on the part of the water contained in the tank through radiation are reduced to a minimum and consequently gas consumption in the matter of heating the water is correspondingly minimized. The insulating material between the walls 3 and 16 is indicated by the numeral 22. Gas is supplied to the burner 19 by way of a valved pipe line 23 leading from any suitable source of supply. This line may or may not be equipped with automatic valves (not shown) for controlling the gas supply to the burner 19. One of the sections 11 of the fire bowl may be provided with a hinged door 24 providing access to the burner 19 and the fire bowl 12. Water under city main pressure enters the tank 2 by way of the pipe line 25, although in its broader aspects the heater may be employed for heating liquids of any character. When city water is used it tends in course of time to produce a thick mud or sediment in the bottom of the tank, and this sediment may be removed quite readily by the employment of clean-out connections 26, which are found in the bottom of the tank 2 immediately over the wall 4. The outer ends of these connections, there being preferably two thereof, are closed by means of threaded caps 27. By removing the caps cleaning implements may be inserted in the tank for facilitating the removal of the sediment and the passage of water together with the sediment from the tank.

The top of the tank communicates with an outlet line 28 which arises vertically from the heater and passes to any system through which heated water is circulated, particularly the hot water circulating pipe lines of a dwelling or a heating system. The top of the heater is closed by means of a cover structure consisting of a pair of semi-circular sections 29. These sections include spaced walls 30—30 packed with insulating material 31. The cover is formed in sections in order that it may be conveniently removed from the body of the heater by a simple operation. Each of the sections includes a depending circular wall 32 which overlaps the upper edge of the outer wall 16 in order to hold the cover in position. Wing nuts 33 are positioned upon threaded shanks 34 carried by one of the sections 29 and engaged with a strip 35 by which the sections are frictionally clamped in assembled relationship. Between the top wall 5 of the tank and the cover sections 29 there is formed a gas chamber 36 which receives the gases discharged from the tubes 7. This chamber communicates with an outlet flue 37 carried by and arising from one of the cover sections 29. This outlet flue may lead to the atmosphere.

In view of the foregoing it will be seen that the present invention provides a hot water heater of durable and substantial construction and one wherein heat loss or waste is minimized. The heat developed by the operation of the gas burner 19 is effectively and efficiently delivered to the fluid contained in the tank through the medium of the bottom wall 4, the vertical tube 7 and to some extent the top wall 5. Loss of heat delivered to the water through radiation to the atmosphere is correspondingly minimized by the insulated outer walls forming the fire bowl and body structure of the heater. During the travel of the heated gases through the tubes 7 they are given a helical motion to produce greater turbulence in order that said gases may be brought into contact with the walls of the tubes for the specific purpose of preventing the so-called "channeling" of the gases. Sediment which collects in the tank from the handling of water may be readily removed without difficulty by way of the clean-out connections 26. The life of the tank 2 is materially prolonged by protecting the welded joints between the bottom wall of the tank and the outer side wall from direct contact with the radiant heat developed within the fire bowl by the operation of the burner. This feature is of very great importance in the matter of overcoming one of the outstanding objections to heaters of this type. It should be observed that not only is the tank 2 insulated against heat loss but also the same construction is used in reference to the fire bowl 12.

While I have described what I consider to be the preferred form of the invention,

nevertheless it will be understood that changes may be made from time to time without departing from the spirit of the invention and the scope of the following claims.

What is claimed is:

1. In a water heater, a vertically disposed tank, a base for effecting the support of said tank, said base including an inner collar terminating at its upper edge in an inwardly directed horizontal flange, an outer collar formed of a plurality of sections spaced from the inner collar to provide an insulating space therebetween, insulating material in said space, inwardly directed horizontal flanges formed with the lower ends of said sections for the support of said inner collar, and a burner structure arranged within said base and secured to the flanges of said sections.

2. In a water heater, a vertically disposed tank, a base for effecting the support of said tank including an inner collar terminating at its upper end in an inwardly directed horizontal flange, an outer collar formed of a plurality of segmental sections spaced from said inner collar to provide insulating space therebetween, insulating material in said space, inwardly directed flanges formed with the upper ends of said sections and overlying the flange of said inner collar, the flanges of said sections forming a seat for the lower end of said tank, horizontally and inwardly directed flanges formed with the lower edges of said sections which underlie the lower edges of said inner collar and serve as a support for the latter, a burner structure within said base, and means connecting said burner structure with the lower flanges of said sections whereby the various parts comprising said base will be held in their assembled relationship.

3. In a water heater, a vertically disposed tank, an insulating wall arranged exterior of said tank, a base for effecting the support of said wall and tank, said base being formed to include a collar constituting the inner wall of said base, an outer wall formed of a plurality of segmental sections spaced from said collar to provide an insulating space therebetween, inwardly directed flanges formed with the upper edges of said sections and overlying the upper edge of said collar, shoulders formed with the upper edges of said sections which together form a seat for said insulating wall, inwardly directed flanges formed with the lower edges of said sections and underlying the lower edge of said collar to form a support therefor, a burner structure positioned within said base and secured to the last mentioned flanges, securing means between the burner structure and the flanges which means together with said shoulders serve to hold said sections in proper spaced relation from said collar.

In testimony whereof I affix my signature.

EDWARD M. HEATHMAN.