March 9, 1965 U. BOWMAN 3,172,463

AIR CONDITIONING UNITS

Filed June 30, 1959 2 Sheets-Sheet 1

FIG. 1

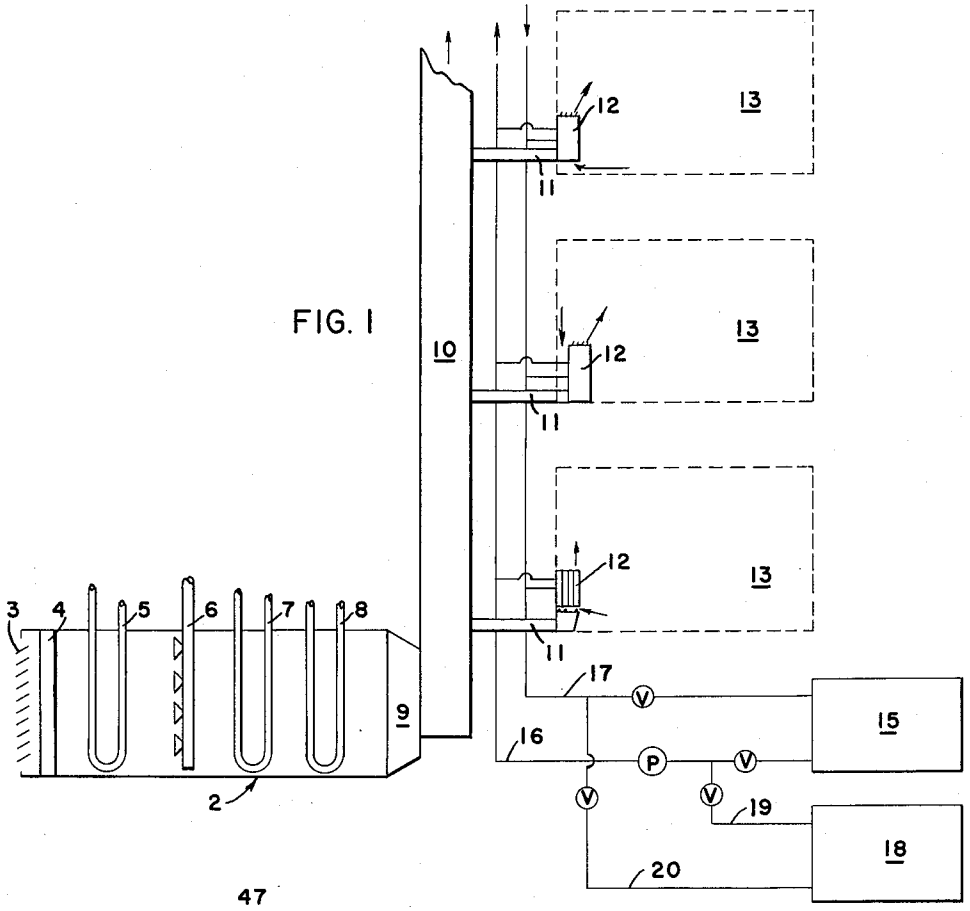

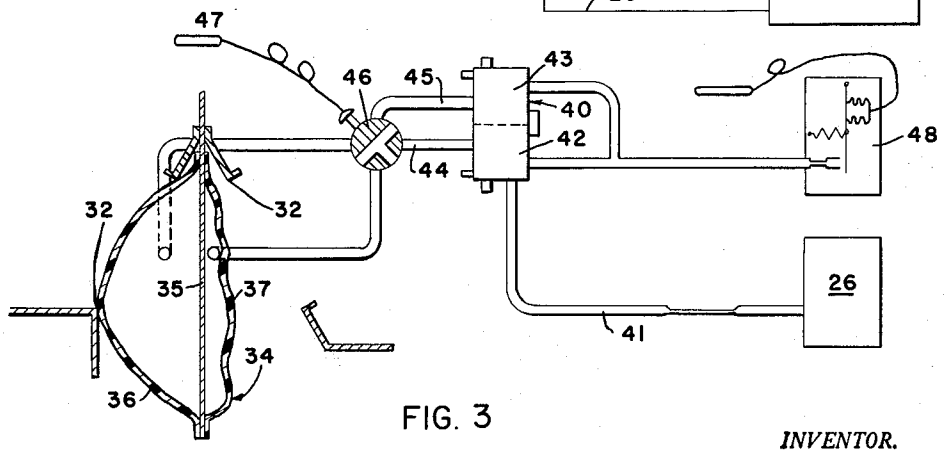

FIG. 3

INVENTOR.

URBAN BOWMAN

BY

Herman Seid

ATTORNEY.

March 9, 1965 U. BOWMAN 3,172,463

AIR CONDITIONING UNITS

Filed June 30, 1959 2 Sheets-Sheet 2

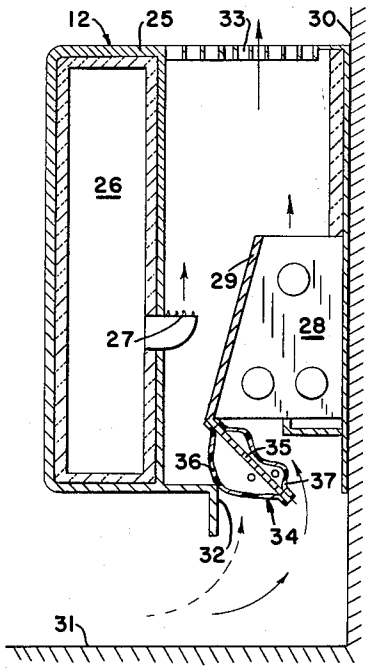

FIG. 2

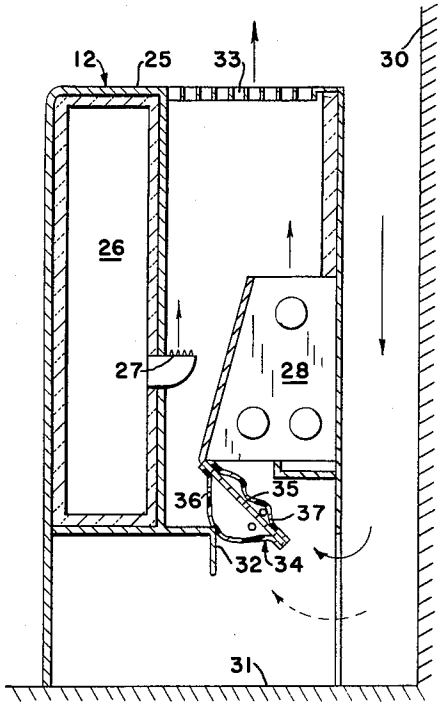

FIG. 4

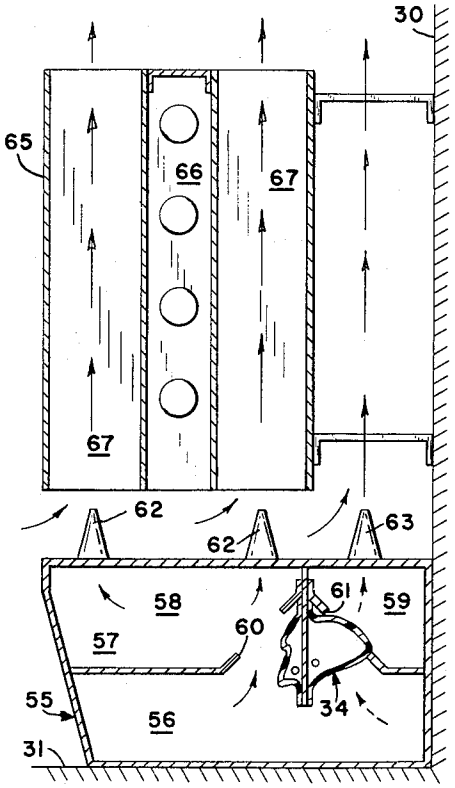

FIG. 5

INVENTOR.
URBAN BOWMAN

BY Herman Seid

ATTORNEY.

United States Patent Office 3,172,463 Patented Mar. 9, 1965

3,172,463

AIR CONDITIONING UNITS

Urban Bowman, Cazenovia, N.Y., assignor to Carrier Corporation, Syracuse, N.Y., a corporation of Delaware

Filed June 30, 1959, Ser. No. 824,067
7 Claims. (Cl. 165—2)

This invention relates to air conditioning units including diaphragm damper arrangements and, more particularly, to an air conditioning unit including a diaphragm damper arrangement and control means therefor and to a method of operating an air conditioning unit.

In induction air systems of the type disclosed, for example, in Carrier Patent No. 2,363,294, granted November 21, 1944, room units have been employed in which the volume of primary air has been held constant while temperature of secondary air induced through the unit heat exchanger has been varied by increasing or reducing the volume of conditioning medium flowing through the heat exchanger. Generally speaking, such systems involve expensive piping costs while the necessity of providing a summer-winter changeover valve at each unit which is capable of satisfactory modulation to meter the flow of conditioning medium through the heat exchanger under summer or winter operating conditions greatly increases the cost of the system.

The chief object of the present invention is to provide a room unit for use in an induction type air conditioning system designed to obviate the disadvantages present in previous systems of this type.

An object of the present invention is to provide an air conditioning unit including a diaphragm damper arrangement and control therefor for use in an induction type air conditioning system.

A further object is to provide an air conditioning unit including a control responsive to temperature in the area being treated to vary the pressure imposed upon a diaphragm damper arrangement thus varying the quantity of secondary air passing through or bypassing the heat exchanger and including means responsive to temperature of conditioning medium passing through the unit heat exchanger to select the diaphragm damper in use.

A further object is to provide a method of operation of an air conditioning unit. Other objects of the invention will be readily perceived from the following description

The present invention relates to an air conditioning unit comprising, in combination, a plenum chamber adapted to be placed in communication with a source of supply of primary air, a heat exchanger adapted to be placed in communication with a source of heat exchange medium, means connected to the plenum chamber to discharge primary air therefrom to induce secondary air through the heat exchanger, a diaphragm damper arrangement responsive to a predetermined control air pressure to regulate the quantity of secondary air induced through the heat exchanger and control means for the diaphragm damper arrangement to vary the quantity of secondary air induced through the heat exchanger.

This invention further relates to a method of operating an air conditioning unit in which the steps consist in supplying primary air to induce secondary air from an area being conditioned to pass in heat exchange relation with conditioning medium, discharging the mixture of primary air and secondary air in the area being conditioned, imposing a predetermined air pressure upon a diaphragm arrangement to regulate the quantity of secondary air being passed in heat exchange relation with the conditioning medium and varying the air pressure imposed in the diaphragm arrangement to vary the quantity

of secondary air passing in heat exchange relation with the conditioning medium.

The attached drawings illustrated preferred embodiments of the present invention, in which

FIGURE 1 is a diagrammatic view of an air conditioning system including air conditioning units of the present invention;

FIGURE 2 is a sectional view of an air conditioning unit of the present invention;

FIGURE 3 is a diagrammatic view of a control arrangement for the diaphragm damper arrangement shown in FIGURE 2;

FIGURE 4 is a sectional view of a modified form of the air conditioning unit shown in FIGURE 2; and

FIGURE 5 is a sectional view of a modified air conditioning unit.

Referring to the attached drawings, there is shown in FIGURE 1 an air conditioning system of the induction type including room units of the present invention. The system includes a central station 2 including dampers 3 through which exterior air may pass into the central station, a filter 4, a pre-cooling coil 5, a spray arrangement 6, a cooling coil 7, a heating coil 8 and a fan 9. Fan 9 draws air through the dampers 3 into the central station where the air is treated and supplies this treated air as a source of primary air through a riser 10 and run-outs 11 to room units 12 placed in the areas 13 being treated. It will be observed the room units 12 are shown diagrammatically, such units being illustrated in greater detail in FIGURES 2, 4 and 5.

A refrigeration machine 15 is provided to furnish cold water to the room units. Pump P draws cold water from refrigeration machine 15 and forwards the cold water through line 16 to the heat exchangers in the room units 12, the water returning from the room units after passage in heat exchange relation with secondary air induced into the units through line 17 to the refrigeration machine.

A source of hot water 18 is also provided for passage to the heat exchangers of the room units during winter opering conditions. This heating source 18 is connected to pump P by line 19 and to return line 17 by line 20. Suitable valves are provided in these lines to permit cold water or hot water to be furnishsed alternatively to the room units as desired.

Referring to FIGURE 2, there is shown a sectional view of a room unit 12. Room unit 12 includes a casing 25 in which is placed a plenum chamber 26 adapted to be connected to run-out 11 to permit primary air to be supplied to the plenum chamber. Suitable discharge means 27 such as nozzles may be provided in plenum chamber 26 to discharge primary air at a predetermined pressure within the units. The discharge means 27 may consist of separate spaced nozzles or may be a single slot type nozzle.

A heat exchanger 28 is placed in casing 25 and is adapted to be connected to lines 16 and 17 to permit conditioning medium to be passed therethrough. A partition 29 separates heat exchanger 28 from plenum chamber 26 and in effect provides a bypass passage for secondary air between the plenum chamber and the heat exchanger. The room unit may be suspended from the wall 30 of the building structure; preferably, the room unit is spaced from the floor 31 of the building structure to permit room air to be induced into the unit from the bottom thereof.

Unit 12 includes an inlet 32 to permit secondary air to be induced into the unit and an outlet 33 to permit a mixture of primary air and secondary air to be discharged into the area being treated.

Passage of secondary air through the heat exchanger of the unit is regulated by means of a diaphragm damper

arrangement 34. Arrangement 34 includes a separation plate 35 which forms a continuation of partition 29 and, in effect, divides or separates inlet 32. One portion of the inlet permits secondary air to pass through the heat exchanger; the other portion of the inlet permits secondary air induced into the unit to bypass the heat exchanger. Diaphragms 36, 37 are mounted on opposite sides of plate 35. These diaphragms are connected to a source of air pressure, as hereinafter explained.

In FIGURE 3, there is shown a suitable control arrangement for the diaphragm damper arrangement 34. Referring to FIGURE 3, there is shown a regulator 40 connected by line 41 to a suitable source of control air pressure which, preferably, is primary air pressure as reflected in the plenum chamber 26 of the room unit. Regulator 40 includes two chambers 42, 43. Line 44 connects chamber 42 to the chamber formed by separation plate 35 and diaphragm 37. Line 45 connects chamber 43 to the diaphragm chamber formed by diaphragm 36 and separation plate 35. A changeover valve 46 is placed in lines 44, 45 to select the diaphragm chamber 36, 37 in which air pressure is applied. Preferably, changeover valve 46 is regulated by means of a bulb 47 placed on heat exchanger 28 so that it is responsive to a temperature of conditioning medium passing through the heat exchanger. Since warm water is supplied to the heat exchanger under winter operating conditions and cold water is supplied to the heat exchanger under summer operating conditions, it will be appreciated that valve 46 selects the diaphragm in use under these various operating conditions.

Both chambers 42 and 43 of regulator 40 are connected to a control 48 which is responsive to temperature in the area being treated. A predetermined pressure is applied through regulator 40 to the diaphragm chamber in use. Control 48 serves to bleed air from the regulator 40 thus varying the pressure imposed against the diaphragm of the chamber in use.

Considering the operation of the air conditioning unit under summer operating conditions, primary air is supplied to the plenum chamber 26, being discharged therefrom through nozzles 27 inducing secondary air through inlet 32 into the unit. Regulator 40 supplies a predetermined air pressure from the plenum chamber 26 through chamber 43 thereof and line 45 to diaphragm chamber 36 of damper arrangement 34. The diaphragm is inflated to close that portion of inlet 32 permitting secondary air induced into the unit to bypass heat exchanger 28 so that all secondary air induced into the unit passes through the heat exchanger 28. Assuming, however, that temperature in the area being treated decreases, control 48 senses such decrease in temperature and permits a portion of the control air pressure to bleed from chamber 43 thus reducing air pressure in diaphragm chamber 36 and permitting some portion of secondary air induced into the unit to bypass heat exchanger 28.

Similarly, under winter operating conditions, changeover valve 46 selects chamber 37 to be connected to regulator 40. Thus chamber 37 is inflated while chamber 36 is deflated permitting secondary air induced into the unit to bypass the heat exchanger. However, as temperature conditions in the area being treated decrease, control 48 serves to bleed air from regulator 40 and diaphragm chamber 37 thus permitting some portion of the secondary air to be induced through the heat exchanger to heat the secondary air so that a mixture of primary and secondary air at a predetermined temperature is supplied to the area being treated.

The room unit shown in FIGURE 4 is similar to the room unit shown in FIGURE 2 except that the inlet 32 is provided in the rear of the unit, the unit being spaced from the wall 30 permitting secondary air to be drawn downwardly between the unit and wall 30 through inlet 32 into the unit. It will be appreciated that the damper arrangement may include mechanical damper arrangements, the diaphragm being employed to actuate the mechanical dampers.

In FIGURE 5, I have shown a modified form of room unit which is a so-called blow-through unit. This unit includes a plenum chamber 55 containing a first portion 56 connected through run-out 11 to a source of supply of primary air and a second portion 57 separated into a first section 58 and a second section 59. An inlet 60 connects section 58 with portion 56 of plenum chamber 55. An inlet 61 connects second section 59 with portion 56 of plenum chamber 55. First section 58 is provided with nozzles 62 while second section 57 is provided with nozzles 63. The diaphragm damper arrangement 34 is provided to close inlets 60 and 61 so that the damper arrangement regulates passage of primary air from the first portion 56 of the plenum chamber into sections 58 and 59 of the plenum chamber rather than regulating the passage of secondary air through the heat exchanger.

A heat exchanger 65 is placed above nozzles 62 of the plenum chamber 55. Heat exchanger 65 includes a coil 66 adapted to be connected to the source of supply of conditioning medium and having vertically extending heat exchange passages 67 placed on either side of coil 66. Thus, the discharge of primary air through nozzles 62 induces secondary air from the area being treated to mix with the primary air, the mixture passing upward through the vertically extending passages 67 being conditioned therein by coil 66 and being discharged into the area being treated.

When primary air is discharged from nozzles 63 of second section 59, secondary air induced into the unit bypasses the vertically extending passages 67 of the heat exchanger 65 so that the secondary air is not varied in temperature, the mixture passing upward rearwardly of the heat exchanger and being discharged into the area being treated.

It will be appreciated heat exchanger 65 may be supported from the wall 30 or, if desired, may be supported from plenum chamber 55 by suitable support means (not shown).

It will be appreciated in this case the operation of the diaphragm damper arrangement is similar to that described in connection with the draw-through unit (FIGURES 2, 4).

As shown in FIGURE 5, the diaphragm damper arrangement and unit is being operated under summer operating conditions so that the mixture of primary air and secondary air passes through the vertically extending passages 67 of heat exchanger 65.

It will be understood, of course, the various units described herein may be provided with casings or furred in the building or structure, as desired.

The present invention provides an air conditioning unit which greatly reduces the cost of installation of an induction type air conditioning system since the piping costs may be greatly reduced while the need for changeover valves to vary flow of conditioning medium through the heat exchangers is eliminated. The unit may be almost wholly constructed in a factory thus eliminating the need for and cost of engineering services in the field. The use of air conditioning units of the present invention greatly simplifies the water piping of an induction type air conditioning system and permits the control to be integrated with a modular unit.

If desired, of course, primary air may be supplied from one plenum chamber of a first unit to a plenum chamber of a second unit while conditioning medium may be supplied from the heat exchanger of a first unit to the heat exchanger of a second unit thus permitting modular installation of the units rather than connecting each plenum chamber by means of a run-out to the riser.

While I have described a preferred embodiment of the present invention, it will be understood the invention is not so limited since it may be otherwise embodied within the scope of the following claims.

I claim:

1. In an air conditioning unit, the combination of a casing, a plenum chamber in said casing for receiving

primary air, discharge means connected to the plenum chamber to discharge primary air within the casing, a heat exchanger in said casing adjacent the plenum chamber for receiving heat exchange medium, said casing having an inlet and an outlet therein, discharge of primary air from said means into the unit inducing secondary air from the area being conditioned through the inlet into the unit to mix with primary air, the mixture being discharged through the outlet, a diaphragm damper arrangement placed adjacent the inlet to determine the path of secondary air in the unit, said arrangement regulating the quantity of secondary air passing through or bypassing the heat exchanger, means to actuate said diaphragm arrangement responsive to a predetermined control air pressure imposed thereon to select the path of secondary air in the unit, and means to vary the control air pressure imposed responsive to variations in temperature in the area being conditioned to actuate the damper arrangement to vary the quantity of secondary air passing through or bypassing the heat exchanger.

2. An air conditioning unit according to claim 1 in which means are provided to connect the diaphragm arrangement with a source of primary air whereby the control air pressure comprises primary air pressure.

3. In an air conditioning unit, the combination of a casing, a plenum chamber in said casing for receiving primary air, discharge means for the plenum chamber to discharge primary air within the casing, a heat exchanger in said casing adjacent the plenum chamber for receiving heat exchange medium, said casing having an inlet and an outlet therein, discharge of primary air from the plenum chamber through said means in the unit inducing secondary air from the area being conditioned through the inlet into the unit to mix with primary air, the mixture being discharged through the outlet, a diaphragm damper arrangement placed adjacent the inlet to determine the path of secondary air in the unit, said arrangement regulating the quantity of secondary air passing through or bypassing the heat exchanger, said arrangement including a separation member, a first diaphragm on one side of said member and a second diaphragm on the opposite side of said separation member, the diaphragms cooperating with the discharge means to regulate induction of secondary air into the unit, and means to control operation of said diaphragms responsive to a predetermined control air pressure imposed thereon to select the path of secondary air in the unit.

4. An air conditioning unit according to claim 3 in which the control includes means responsive to the temperature of the area being conditioned to actuate the diaphragms to vary the quantity of secondary air induced through or bypassing the heat exchanger.

5. An air conditioning unit according to claim 4 in which a partition separates the heat exchanger from the plenum chamber discharge means to form a bypass passage, the separation plate forming, in effect, an extension of said partition, the diaphragm members cooperating with the separation plate and wall members forming the inlet in said casing to form separate paths for secondary air and means are provided responsive to temperature of conditioning medium passing through the heat exchanger

to determine the diaphragm member in use to modulate flow of secondary air.

6. In a method of operation of an air conditioning unit, the steps which consist in discharging primary air into the unit to induce secondary air from an area being conditioned into the unit in heat exchange relation with a conditioning medium being supplied in the unit, discharging the mixture of primary air and secondary air in the area being conditioned, under a first set of operating conditions, imposing a predetermined air pressure upon a diaphragm arrangement in the unit to select the quantity of secondary air being passed in heat exchange relation with the conditioning medium, and, under a second set of operating conditions, imposing a predetermined air pressure upon a second diaphragm arrangement to select the quantity of secondary air passing in heat exchange relation with the conditioning medium, under the first set of operating conditions varying the air pressure imposed upon the first diaphragm arrangement to vary the quantity of secondary air passing in heat exchange relation with the conditioning medium, and under the second set of operating conditions varying the air pressure imposed upon the second diaphragm arrangement to vary the quantity of secondary air passing in heat exchange relation with the conditioning medium.

7. The method of operation of an air conditioning unit according to claim 6 which includes the steps of selecting the first diaphragm arrangement or the second diaphragm arrangement in response to predetermined temperatures of conditioning medium reflecting the first set of operating conditions and the second set of operating conditions and varying the pressure imposed upon the selected diaphragm arrangement responsive to temperature in the area in which the unit is placed.

References Cited by the Examiner

UNITED STATES PATENTS

1,981,952	11/34	Foss	165—28
2,122,168	6/38	Woolley	165—123
2,344,555	3/44	McGrath	165—28
2,463,322	3/49	Sewell et al.	165—24
2,492,757	12/49	Meek	165—22
2,567,758	9/51	Ashley	165—3
2,758,822	8/56	Sauter	165—120
2,793,812	5/57	McDonald	236—80
2,794,598	6/57	Waterfill	236—13
2,813,474	11/57	Kurth et al.	165—96 X
2,835,449	5/58	Joesting	236—80
2,850,242	9/58	Newton	165—57 X
2,856,131	10/58	Conlan	236—13
2,880,752	4/59	Kreuttner	98—38 X
2,899,180	8/59	Allander et al.	165—16
2,978,183	4/61	Donahue	236—13

FOREIGN PATENTS

379,430	9/32	Great Britain.
556,410	1/56	Italy.

CHARLES SUKALO, *Primary Examiner.*

HERMAN BERMAN, HERBERT L. MARTIN, PERCY L. PATRICK, *Examiners.*