Feb. 7, 1967 L. A. GRANT 3,302,976

DE-LINER MACHINES FOR BLAST FURNACES AND THE LIKE

Filed Oct. 4, 1965 2 Sheets-Sheet 1

Fig. 1.

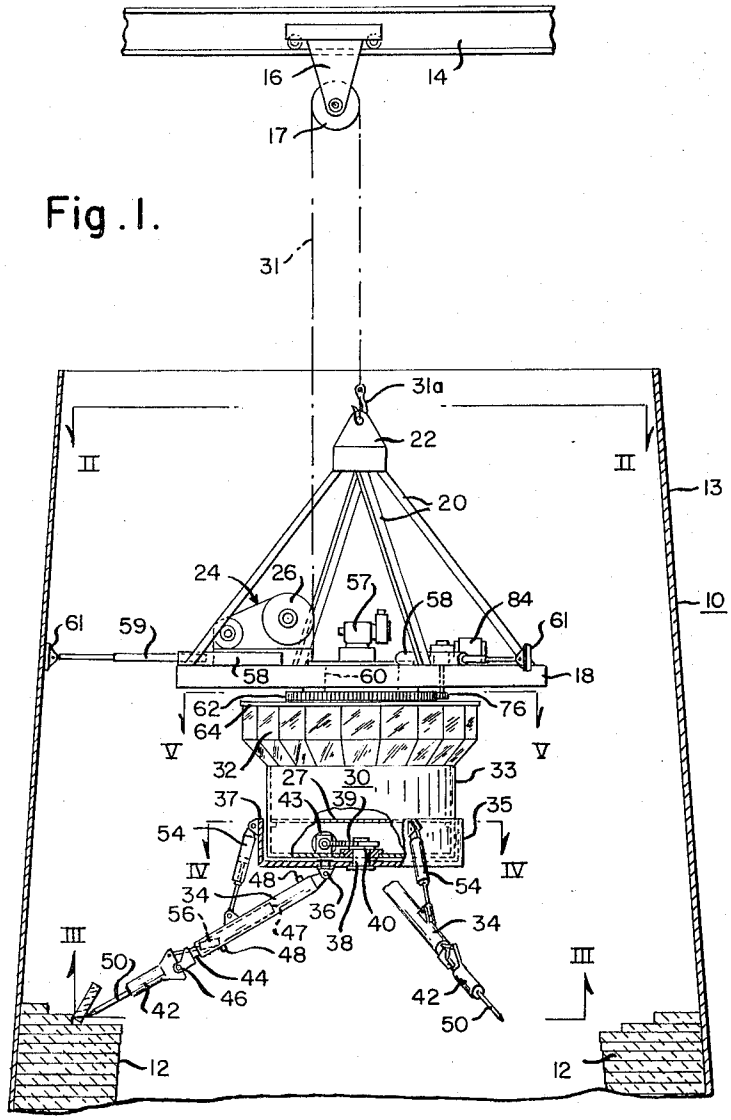

Fig. 5.

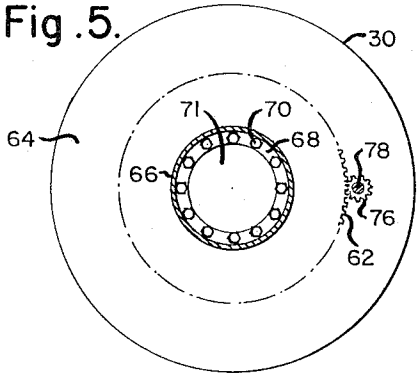

Fig. 4.

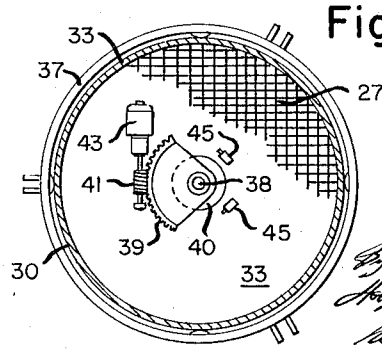

INVENTOR
Louis A. Grant
By Hooper, Leonard & Buell
his attorneys

Feb. 7, 1967 L. A. GRANT 3,302,976

DE-LINER MACHINES FOR BLAST FURNACES AND THE LIKE

Filed Oct. 4, 1965 2 Sheets-Sheet 2

Fig. 2.

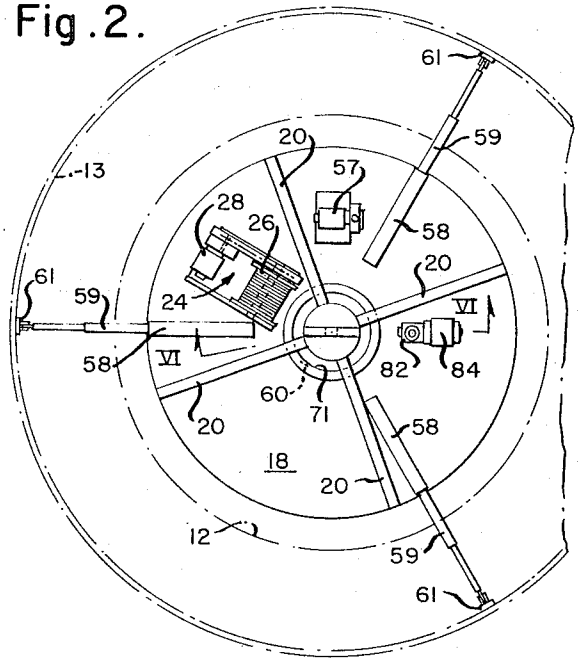

Fig. 6.

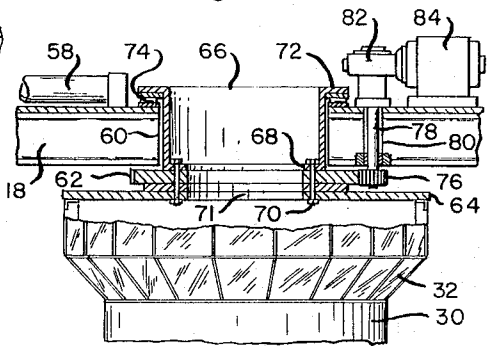

Fig. 3.

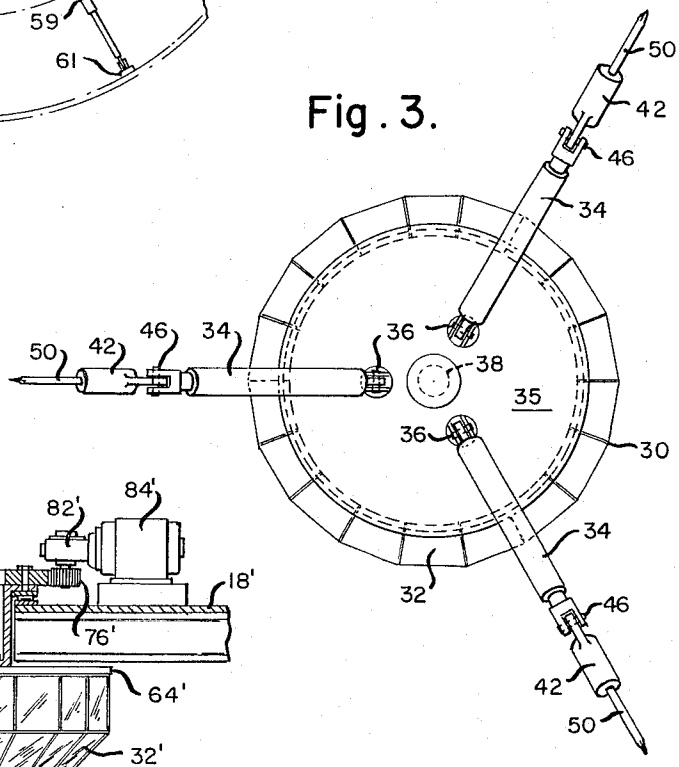

Fig. 7.

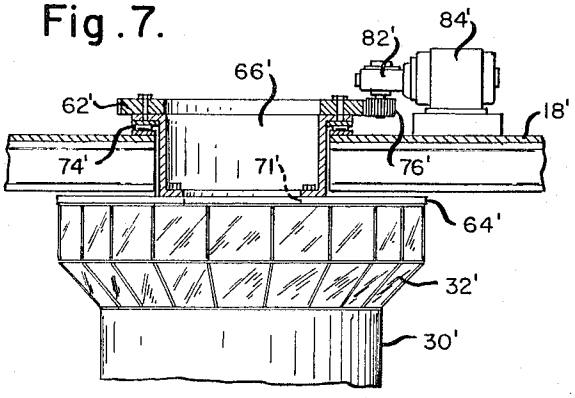

INVENTOR
Louis A. Grant
By Hopgood, Calvert & Buell
his Attorneys

United States Patent Office

3,302,976

Patented Feb. 7, 1967

3,302,976

DE-LINER MACHINES FOR BLAST FURNACES AND THE LIKE

Louis A. Grant, 7886 Saltsburg Road, Plum Borough, Allegheny County, Pa. 15239

Filed Oct. 4, 1965, Ser. No. 492,778

11 Claims. (Cl. 299—70)

My present invention relates to blast furnace equipment and more particularly to a liner removing or skulling machine for use in blast furnaces to remove the inner firebrick lining therefrom.

This application is a continuation-in-part of my copending application Serial No. 436,112, filed March 1, 1965, and now abandoned, which in turn is a continuaton-in-part of my abandoned application Serial No. 156,107, filed November 30, 1961.

Throughout the steel industry blast furnaces are almost universally employed for extracting iron from its ores. A blast furnace consists essentially of a steel shaft or shell, the inner surfaces of which are lined with refractory or firebrick varying in thickness from 18 to 60 inches. Blast furnaces, including their linings, are usually from 100 to 125 feet in height, 17 to 20 feet in inside diameter at the top opening, and taper downwardly and outwardly to 20 to 35 feet in diameter at the largest inside section, the bosch line, which is about 20 feet above ground level.

The life of the blast furnace refractory lining varies from about 4 to 7 years. At the end of this time, the eroded brickwork must be scraped or chipped from the steel shell and a new lining laid in place thereof. In the past, in order to remove the liner it has been the process to erect a wooden platform or scaffold upon which a crew of workmen can be supported. The platform is lowered into the top of the furnace, and the workmen using suitable tools such as pneumatic hammers and picks and drills, chip away at the brick lining until the latter is removed. The loosened brick drops into the furnace where it is removed by various mechanical devices.

As the platform is lowered down into the furnace in order to offset the increasing diameter of the blast furnace shaft, it is necessary to periodically extend the outer periphery of the platform in order that the workmen can reach the adjacent surfaces of the furnace lining with their pneumatic tools. An additional crew of workmen are necessary for lowering the platform periodically as the delining process progresses down the interior of the shaft. This difficult procedure is complicated still further by the fact that the walls of the blast furnace lining are still hot and the workmen can remain therein for only limited times. The procedure therefore is very expensive, not only because it entails considerable expenditure of time and labor, but also because it involves a considerable and costly interruption of the steel manufacturing process.

My invention overcomes these disadvantages by providing an efficient and virtually automatic machine for delining a blast furnace in only a very small fraction of the time consumed by the conventional process described above. Therefore, considerable savings in labor and reduction of plant down-time are effected, in addition to releasing operating personnel from a rather hazardous activity, as now conventionally performed.

Accordingly, I provide apparatus for removing blast furnace lining and the like of a vertical shaft or shell, with the apparatus comprising a framework having an outer diameter less than the smallest inner diameter of the shaft including the lining, an operator's cab rotatably mounted on the under side of the framework, telescoping boom means pivotally second to a support rotatably mounted on the under side of the cab with the pivot and

support mountings being arranged respectively to permit angular displacement of the boom means in the horizontal and vertical direction and suitable pneumatic or hydraulic chipping tool means mounted at the end of the telescoping boom means, with the chipping tool means being disposed to engage the inner wall lining of the shell. In addition, means are provided for lowering and stabilizing the framework within the shell, and for facilitating visual access of operating personnel from within the cab.

Other objects, features and advantages of the invention, together with structural details thereof, will be elaborated upon as the following description of a presently preferred embodiment of my invention and of a method of practicing the same proceeds.

In the accompanying drawings I have shown a presently preferred embodiment of the invention and have illustrated a presently preferred method of practicing the same, wherein:

FIGURE 1 is a side elevational view partially in section of my de-lining machine illustrated in conjunction with a broken away portion of a blast furnace or the like;

FIGURE 2 is a top plan view of my de-lining machine as shown in FIGURE 1 and taken along reference line II—II thereof;

FIGURE 3 is a bottom plan view of the de-lining machine shown in FIGURE 1 and taken along reference line III—III thereof;

FIGURE 4 is a cross-sectional view of the apparatus shown in FIGURE 1 and taken generally along reference line IV—IV thereof;

FIGURE 5 is another cross-sectional view of my apparatus as shown in FIGURE 1 and taken generally along reference line V—V thereof; and,

FIGURE 6 is an enlarged partial longitudinally sectioned view of my apparatus taken generally along reference line VI—VI of FIGURE 2 and

FIGURE 7 is a similarly enlarged view of the apparatus arranged generally as in FIG. 6 but showing alternating means for supporting and rotating the operator cab.

Referring now more particularly to FIGURE 1 of the drawings, the exemplary form of my de-lining machine shown therein is adapted for insertion into the upper open end of a blast furnace **10** having a refractory brickwork lining **12**. A beam or other support **14** is suspended across the top of the blast furnace shell **13**. The beam **14**, which can be of I-beam configuration, is provided with a movably mounted idler truck **16** having pulley wheel **17**.

The delining machine includes a supporting framework **18** having a plurality of lifting or supporting rods **20** secured at their lower ends to the upper surface of the platform **18** at the outer periphery thereof, and at their other, upper ends to a clevis **22**. Mounted on the upper side of the platform **18** is a winch arrangement **24** including a drum **26** and a motor drive **28** therefor. A lifting cable, designated by chain outline **31**, is secured to the clevis 22 by means of lifting hook **31***a* or the like. The cable **31** passes over the aforementioned pulley **17** as shown and is wound upon the winch drum **26**.

An operator's cab **30** is rotatably mounted on the under side of the frame **18**. In this example the cab **30** is entirely enclosed including a peripherally extending glass window area 32 for an operator or operators to view the delining operation from a vantage point which is protected from dust and flying particles. The window area **32** can be glazed with safety glass or reinforced glass, or alternatively a suitable protective cage structure (not shown) can be supported adjacent the outer surfaces of glass area. Desirably, base portion **33** of the cab **30** is provided with suitable heat insulation (not shown) and

the glass area 32 can be supplied with double glazing or other suitably insulated glass means to protect the operating personnel from the heat emitted by the still hot linings 12.

At the under side of the cab 30 are mounted a plurality of telescoping boom structures 34, each of which is typically connected by means of its pivot mounting 36 to the underside of a carriage 35, which in this example is pivotally or rotatably mounted on the underside of the cab 30. The carriage in this arrangement is cup-shaped and is provided with a circumferential, vertically extending side wall member 37. As better shown in FIGURES 1 and 4 the carriage 35 is pivotally connected to the base portion 33 of the cab 30 by means of pivot pin 38 extending centrally through the floor section thereof. An outwardly extending supporting flange 40 is secured to the inner or upward end portion of the pin 38. Desirably suitable anti-frictional means or thrust bearing, such as ball bearings (not shown), can be provided between the flange 40 and the aforementioned floor of the base member 33.

The pivot pin 38 preferably extends through the supporting flange 40 where it is joined at its upper end to a sector worm gear 39. The worm gear 39 in this example desirably embraces about 130° of arc so that each of the boom assemblies 34 can be angularly displaced in a horizontal plane a corresponding distance to provide 360° coverage thereby of the lining 12. The arc of the worm gear 39 is slightly greater than the required 120° in order to afford an overlap. The worm gear segment 39 is driven by worm 41 which is in turn rotated by suitable driving means denoted generally by reference character 43. Desirably a pair of limit switches 45 are disposed respectively at the limits of angular displacement of the worm gear segment 39 and connected to suitable electric circuitry (not shown) for reversing or deenergizing the drive mechanism 43, as desired.

The degree of horizontal scan or angular displacement of the booms 34 will be dependent upon the number of telescoping booms utilized. Thus, when three such booms are utilized as shown in the drawings, the worm gear segment gear 39 can be provided in the form of a 130° sector as described above. On the other hand if four such booms (not shown) are utilized the gear segment 39 desirably would be made slightly greater than a quadrant sector, while for two such booms the worm gear segment 43 would be slightly greater than semicircular. In any event a full 360° horizontal scan is provided by this arrangement of my apparatus.

In this arrangement of the invention an air hammer 42 or other suitably powered chipping tool is pivotally mounted on the extendably end portion of each telescoping boom 34 as denoted by reference character 46. Each air hammer is provided with a bit 50, and a number of lifting cylinders 54 secured at their upper ends to the sidewall 37 of the carriage 35 and at their lower ends to the boom assemblies 34 provides an elevational scan of about 90° for each of the telescoping booms 34. Cylinders 56 provide a further elevational adjustment for the air hammers 42, and for this purpose are mounted respectively upon the piston rods 44 of the telescoping booms. A double acting piston 47 can be moved in either direction by hydraulic connections 48 to extend or contract the telescoping booms 34 to move the air hammers 42 relative to the furnace lining 12.

An air-hydraulic pump unit 57 mounted upon the upper surface of the platform 18 provides compressed air for the pneumatic hammers 42 and pressurized hydraulic fluid for the telescoping booms 34, the adjusting cylinders 56, the lifting cylinders 54, and the stabilizing cylinders 58 described below.

In order to stabilize the framework 18 in a selected lowered position relative to the furnace 10, and relative to the varying diameter shell 13 thereof, a plurality of hydraulic stabilizing cylinders 58 are secured to the upper surface of the supporting platform 18 as better shown in FIGURE 2 of the drawing. The piston rods 59 of the cylinders 58 in this example can be extended radially to engage the adjacent inner surfaces of the shell 13. Desirably the piston rods 59 terminate in pivotally connected shoe members 61 to facilitate engagement of the piston rods with the inner surfaces of the shell 13.

The arrangement of using a plurality of telescoping booms 34 affords an additional safety feature in the event the cable 31 breaks. If the cable 31 should break, the telescoping booms 34 with their drill bits 50 in place in their operating positions at the liner 12 will be forced against the liner 12 thereby supporting the framework 18.

FIGURE 2 also shows a central opening 60 in the platform 18 whereby operating personnel can enter and leave the cab 30. In this arrangement of the invention as better shown in FIGURES 2, 5, and 6, the cab 30 is rotatably mounted upon the under side of the supporting platform 18, and means are provided for rotating the cabin a controlled manner so that operating personnel can view the progress of the delining procedure around the periphery of the lining without leaving the operating console (not shown) mounted within the cab 30. The window area 32 desirably is bayed outward as shown in FIGURE 1 to provide operating personnel with a downward and outward view of the delining process. Desirably a raised floor structure or cat walk 27 is mounted in the base section 33 of the cab to form a protective cover for the drive mechanism 43 and the gearing train 30–41. It is also contemplated in accordance with other modifications of my invention, that such cab rotating means can be employed for horizontally scanning the telescoping boom arrangement 34 with the result that the rotatably mounted carriage 35 can alternatively be omitted and the telescoping booms 34 can be mounted directly on the under side of the cab 30.

One arrangement for so rotating the cab 30 includes a circular rack 62 formed about the outer periphery of annular ceiling structure 64 of the cab, as better shown in FIG. 6. The ceiling structure 64 is suspended from a circular, hollow flanged bracket member 66, to the lower inwardly extending flange 68 of which the ceiling structure is secured by means of a number of mounting bolts 70. The hollow, circular bracket 66 is aligned with the opening 71 in the ceiling structure 64 to provide personnel access to the cab 30. However, the circular bracket 66 first is inserted and closely fitted within the aforementioned platform opening 60, so that its upper and outwardly extending flange 72 overlies the adjacent edge portions of the platform opening 60. Suitable antifrictional means illustrated schematically in FIG. 6 and designated by the reference character 74, for example, a suitable ball bearing arrangement (not shown), desirably are between the out turned flange 72 and the aforementioned edge portions.

The ceiling structure 64 together with the cab 30 are rotated by a pinion 76 enmeshed with the rack 62 and secured to reduction gearing output shaft 78 extended through an opening 80 therefor in the platform 18. The gear reduction unit 82 is driven by suitable driving means, for example, an electric motor 84. Both the reduction unit 82 and the driving means 84 can be mounted on the upper side of the supporting platform 18.

An alternative cab supporting and rotating arrangement is shown in FIG. 7 of the drawings. In this example circular rack 62′ is secured to the upper surface of the flanged supporting bracket 66′ which in turn is secured to the ceiling structure of the cab 30′. A drive pinion 76′, forming the output of cab drive means including motor 84′ and gear reduction unit 82′, is supported above the platform 18′ in enmeshed relation with the circular rack 62′ for rotation of cab 30′.

From the foregoing it will be apparent that novel and efficient forms of de-lining apparatus have been disclosed herein. While I have shown and described certain

presently preferred embodiments of the invention it is to be distinctly understood that the invention is not limited thereto but may be otherwise variously embodied within the scope of the following claims.

I claim:

1. In an apparatus for removing furnace linings and the like, the combination comprising a platform shaped for insertion through said furnace, a carriage spaced beneath said platform but rotatably mounted on the underside thereof, a plurality of telescoping boom assemblies pivotally mounted on the under side of said carriage, said pivot mountings being disposed to permit angular and vertical displacement of said boom assemblies, lifting means for each of said boom assemblies, said lifting means being secured to said carriage at a position spaced upwardly of said boom assemblies, a power actuated chipping tool secured to the outer movable end of each of said telescoping assemblies, and means for actuating said tools and said lifting means and for rotating said carriage.

2. The combination according to claim 1 characterized in that said rotating means are disposed to angularly displace said carriage through an arcuate distance slightly greater than that corresponding to 360° divided by the number of said boom assemblies.

3. The combination according to claim 1 characterized in that a plurality of stabilizing piston and cylinder arrangements are mounted on upper side of said platform and extend radially thereof, said arrangement being extendable to engage forcibly the adjacent inner surfaces of said furnace to stabilize said platform at its supported position therein.

4. In a delining apparatus, the combination comprising a support, a cab structure mounted at one end thereof on said support, visual access means extending perimetrically about said cab structure, a carriage rotatably mounted on the other end of said cab structure, a plurality of boom assemblies pivotally mounted on said carriage, said pivot mounting being disposed for angular displacement of said boom assemblies transversely of the direction of carriage rotation, a power actuated chipping tool mounted on the outer movable end of each of said boom assemblies, driving means for angularly displacing each of said boom assemblies, said driving means being secured to said carriage at a position longitudinally displaced from said pivot mounting, and means for actuating said tools and for rotating said carriage.

5. The combination according to claim 4 characterized in that said cab structure is rotatably mounted upon said support.

6. In a delining machine arranged for lowering into the upper open end of a blast furnace and the like, the combination comprising a generally circular platform having a smaller outer diameter than the smallest inner diameter of the lining of said furnace, a generally circular cab structure mounted centrally on the under side of said platform, outwardly and downwardly directing and circumferentially extending visual access means supported on said cab structure, a generally cup-shaped carriage

structure rotatably mounted on the underside of said cab, a plurality of telescoping boom assemblies pivotally mounted on the under side of said carriage structure, said pivot mountings being disposed for vertical and angular displacement of said boom assemblies, said carriage pivot mounting being disposed for horizontal and angular displacement of said carriage structure, a power actuated chipping tool mounted on the outer movable end of each of said boom assemblies, a like plurality of lifting means disposed generally vertically above said boom assemblies respectively and mounted adjacent the upper end of said carriage structure, and means for angularly displacing said carriage structure and for actuating said tools.

7. The combination according to claim 6 characterized in that each of said tools is pivotally mounted on said boom assembly ends and additional lifting means are mounted on the movable portion of each of said boom assemblies at a location displaced from the outer end thereof and are coupled to said tools for adjustably and angularly vertically displacing said tools.

8. The combination according to claim 6 wherein the pivot mounting for said carriage structure is extended through the floor structure of said cab, and driving means are mounted upon said floor structure within said cab for angularly displacing said pivot mounting through a gearing train secured respectively to said pivot mounting and to said driving means.

9. The combination according to claim 6 wherein said cab is positioned coaxially of said support and is rotatably mounted thereon.

10. The combination according to claim 9 characterized further in that said rotatable cab mounting includes a circular rack mounted on a ceiling structure for said cab, and driving means therefor mounted on said support include an output pinion enmeshed with said circular rack.

11. The combination according to claim 9 characterized further in that said rotatable mounting further includes a circular bracket extended through a central opening of said support and having an inturned flange secured to said ceiling structure and an outturned flange overlying the edge portions of said platform openings, and anti-frictional means are mounted between said outturned flange and said edge portions.

References Cited by the Examiner

UNITED STATES PATENTS

2,178,956	11/1939	Dyer	182—37
2,710,418	6/1955	Putnam	15—104.07
2,983,496	5/1961	Grant	299—70 X
3,090,983	4/1963	Modrak et al.	299—70 X

FOREIGN PATENTS

1,022,537	1/1958	Germany.

ERNEST R. PURSER, *Primary Examiner.*