Oct. 28, 1952 E. W. COLLINS 2,615,639

MACHINE FOR WINDING ARMATURES

Filed Dec. 23, 1949 18 Sheets-Sheet 1

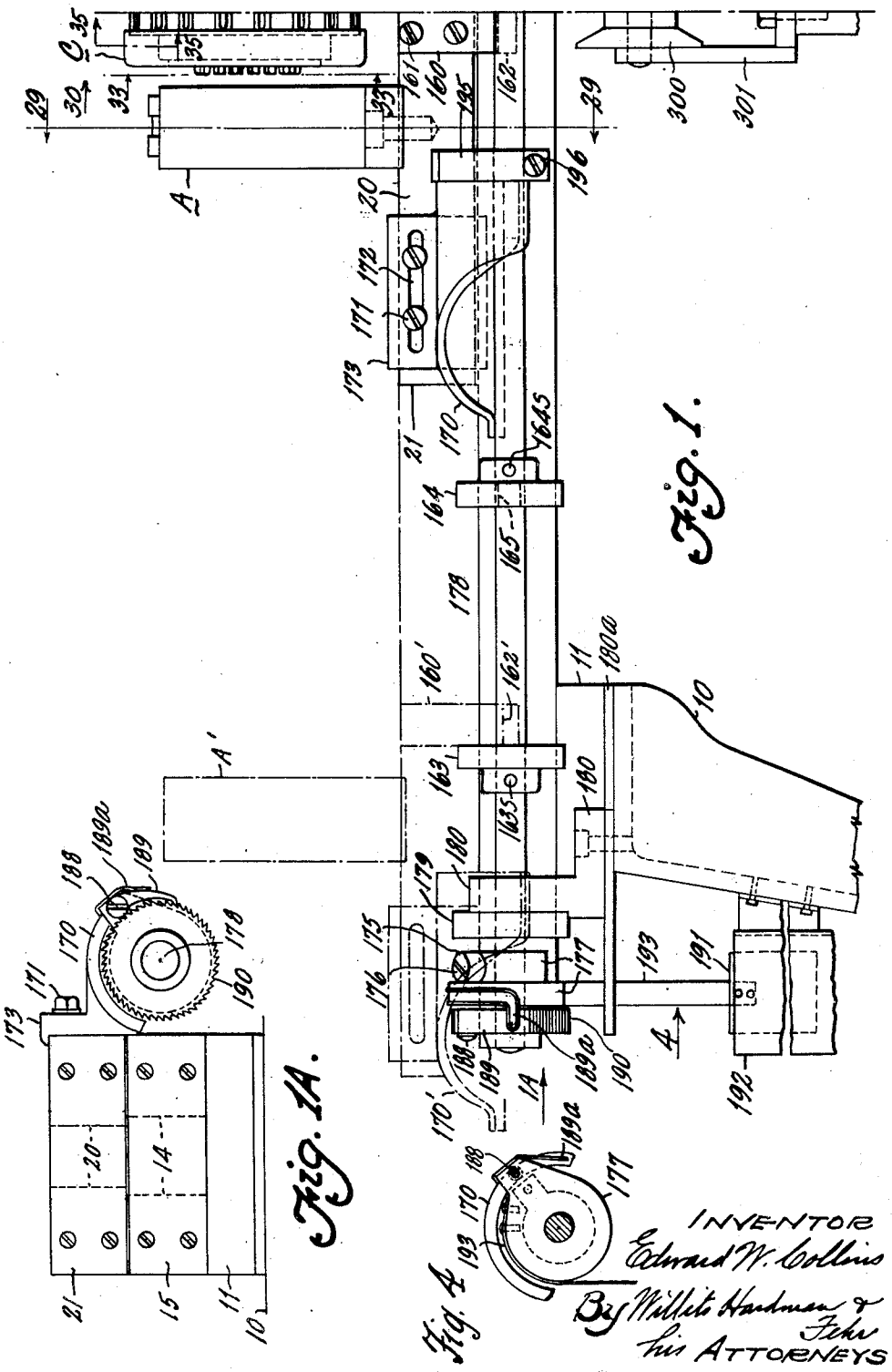

Fig. 1.

Fig. 1A.

Fig. 4

INVENTOR
Edward W. Collins
By Willett Hardman & Fehr
His ATTORNEYS

Oct. 28, 1952 E. W. COLLINS 2,615,639

MACHINE FOR WINDING ARMATURES

Filed Dec. 23, 1949 18 Sheets-Sheet 2

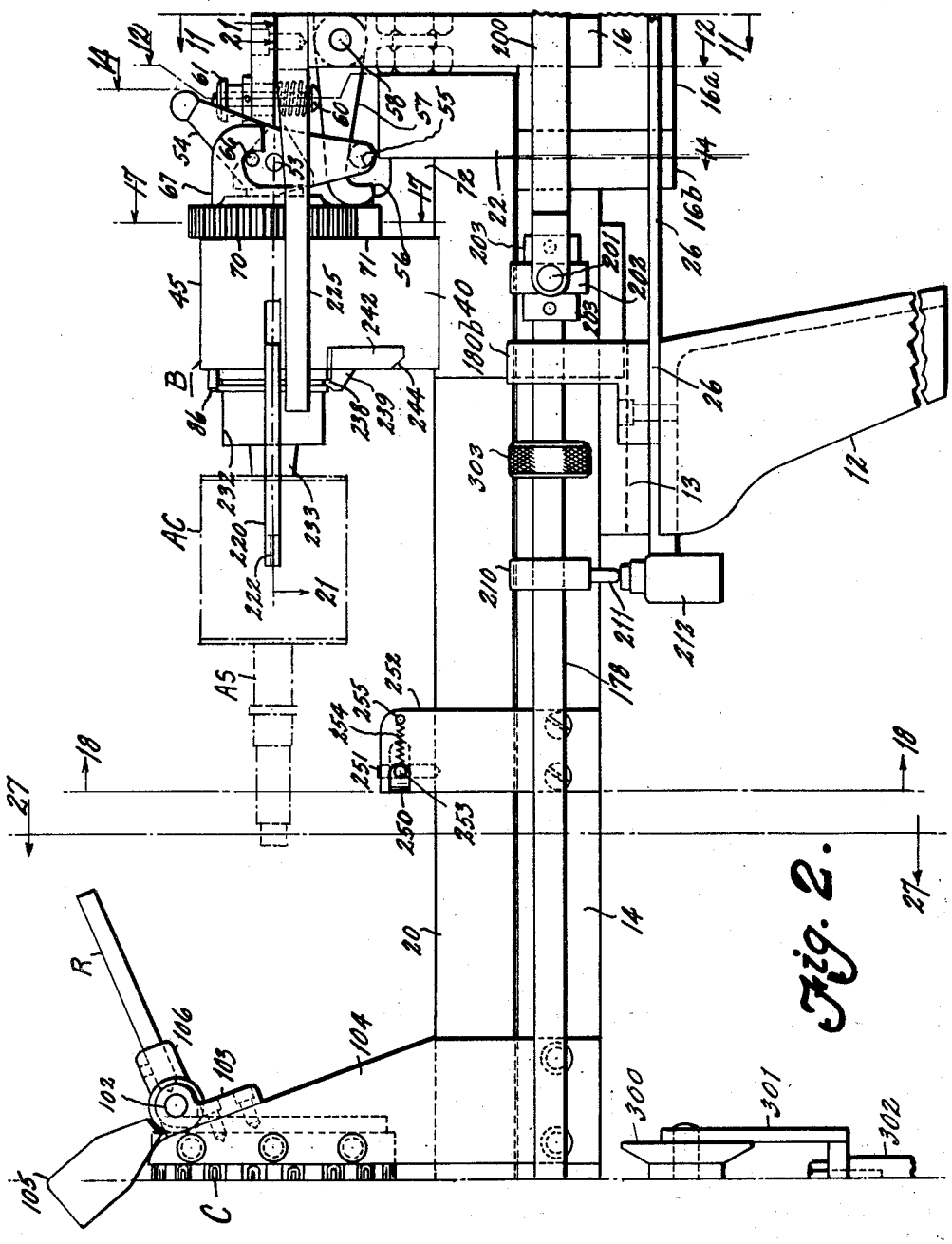

Fig. 2.

INVENTOR
Edward W. Collins
By Willett Hardman and Fehr
his ATTORNEYS

Oct. 28, 1952 E. W. COLLINS 2,615,639

MACHINE FOR WINDING ARMATURES

Filed Dec. 23, 1949 18 Sheets-Sheet 3

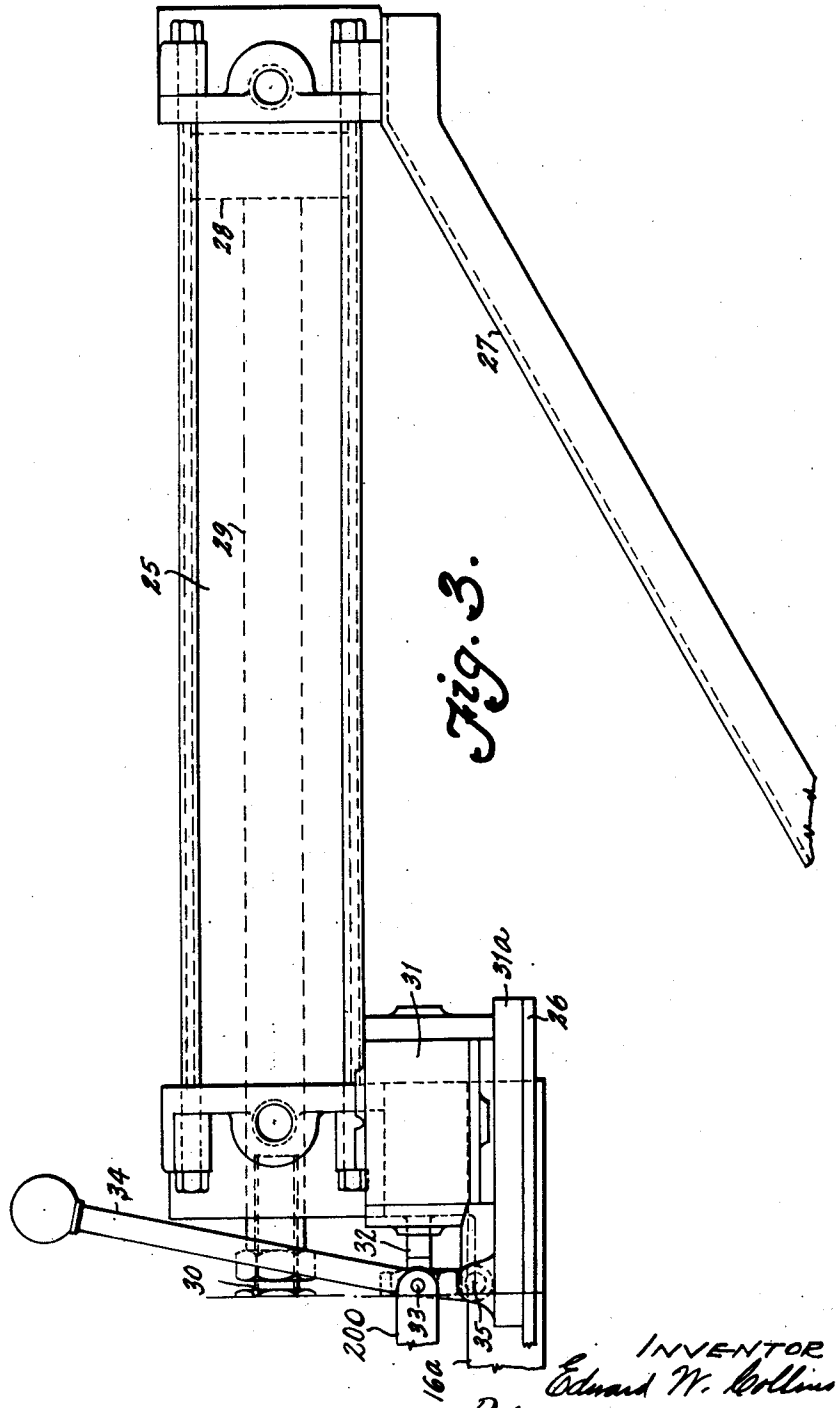

Fig. 3.

INVENTOR
Edward W. Collins
By Willis Hardman & Fisher
his ATTORNEYS

Oct. 28, 1952 E. W. COLLINS 2,615,639

MACHINE FOR WINDING ARMATURES

Filed Dec. 23, 1949 18 Sheets-Sheet 4

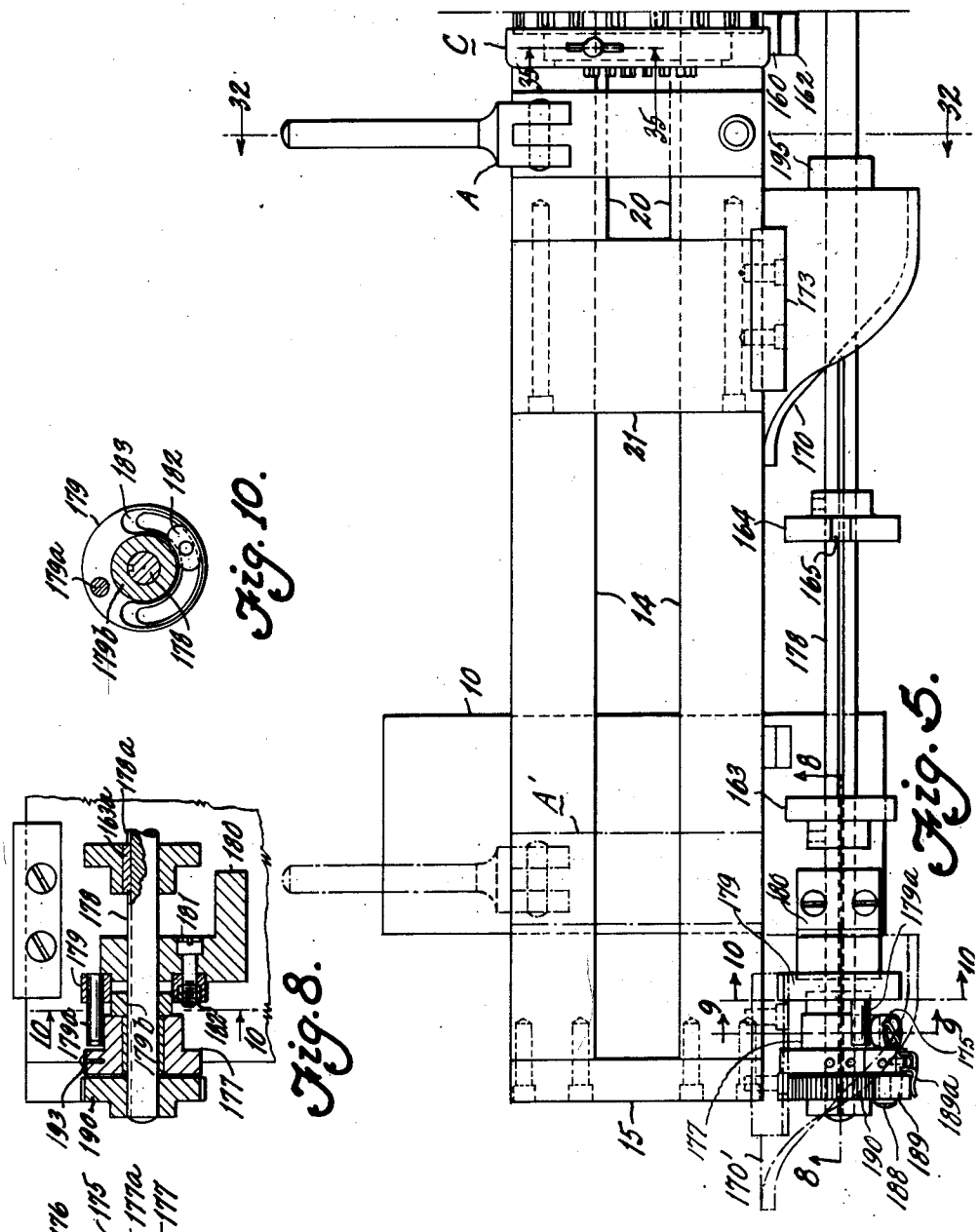

Fig. 5.

Fig. 10.

Fig. 8.

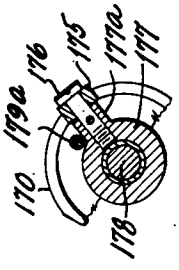

Fig. 9.

INVENTOR
Edward W. Collins
By Willett Hardman & Fisher
his ATTORNEYS

Oct. 28, 1952 E. W. COLLINS 2,615,639

MACHINE FOR WINDING ARMATURES

Filed Dec. 23, 1949 18 Sheets-Sheet 5

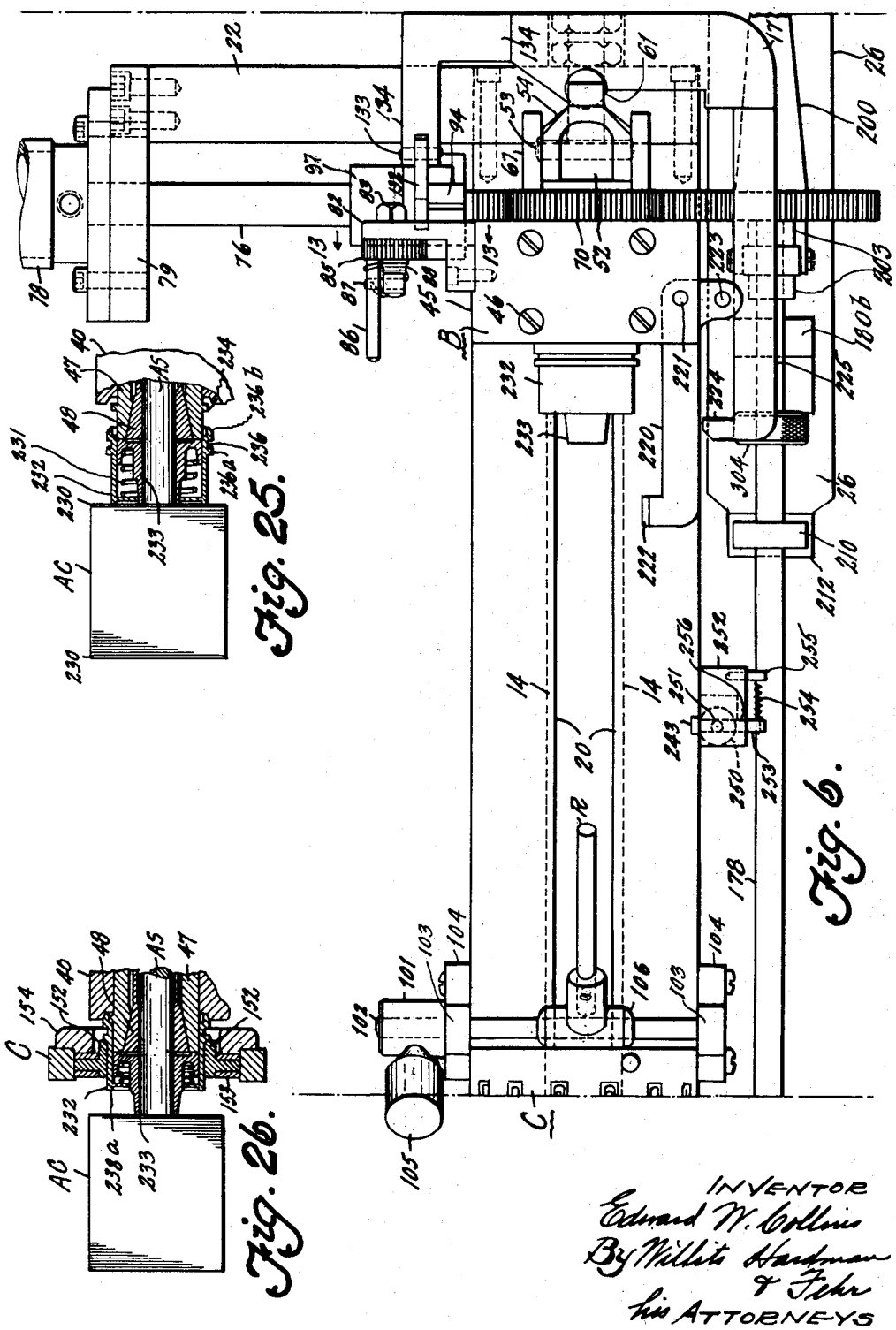

Fig. 6.

Fig. 25.

Fig. 26.

INVENTOR
Edward W. Collins
By Willis Hardman & Fehr
his ATTORNEYS

Oct. 28, 1952 E. W. COLLINS 2,615,639

MACHINE FOR WINDING ARMATURES

Filed Dec. 23, 1949 18 Sheets-Sheet 6

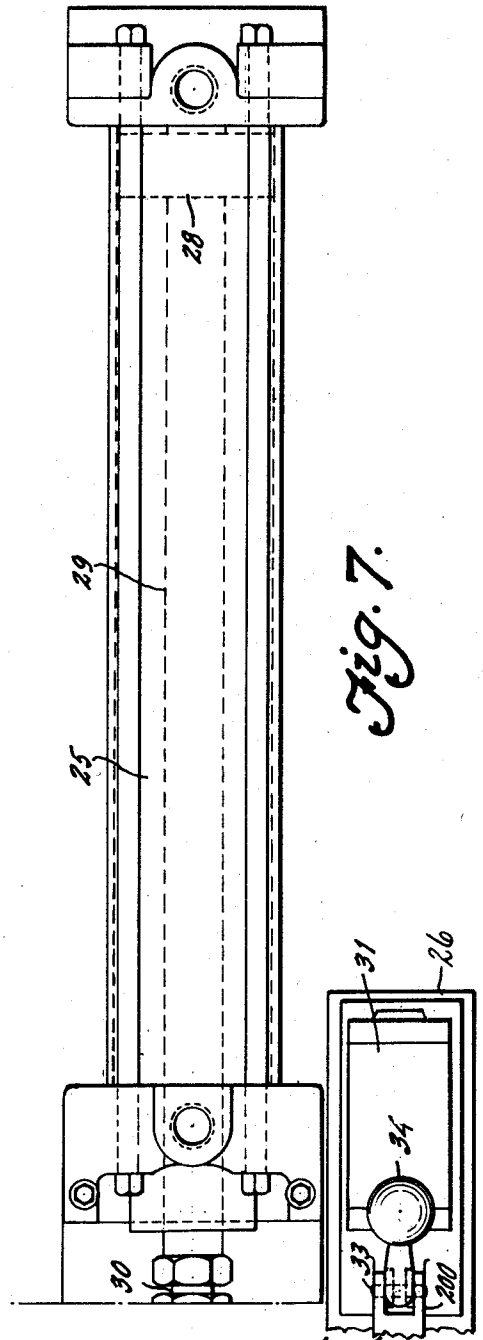

Fig. 7.

INVENTOR
Edward W. Collins
By Willis & Hardman
& Fike
his ATTORNEYS

Oct. 28, 1952 E. W. COLLINS 2,615,639

MACHINE FOR WINDING ARMATURES

Filed Dec. 23, 1949 18 Sheets-Sheet 7

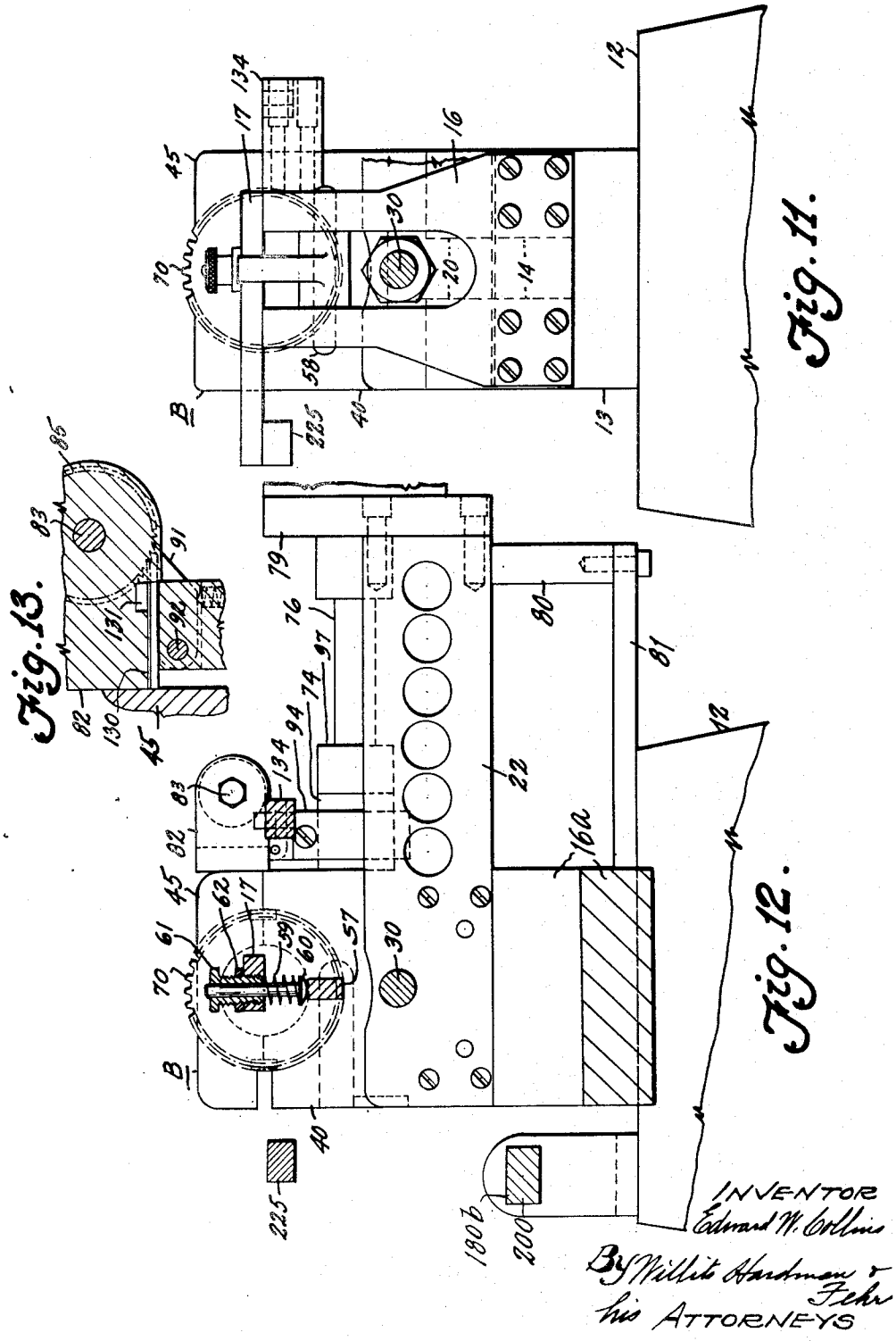

Oct. 28, 1952 E. W. COLLINS 2,615,639

MACHINE FOR WINDING ARMATURES

Filed Dec. 23, 1949 18 Sheets-Sheet 8

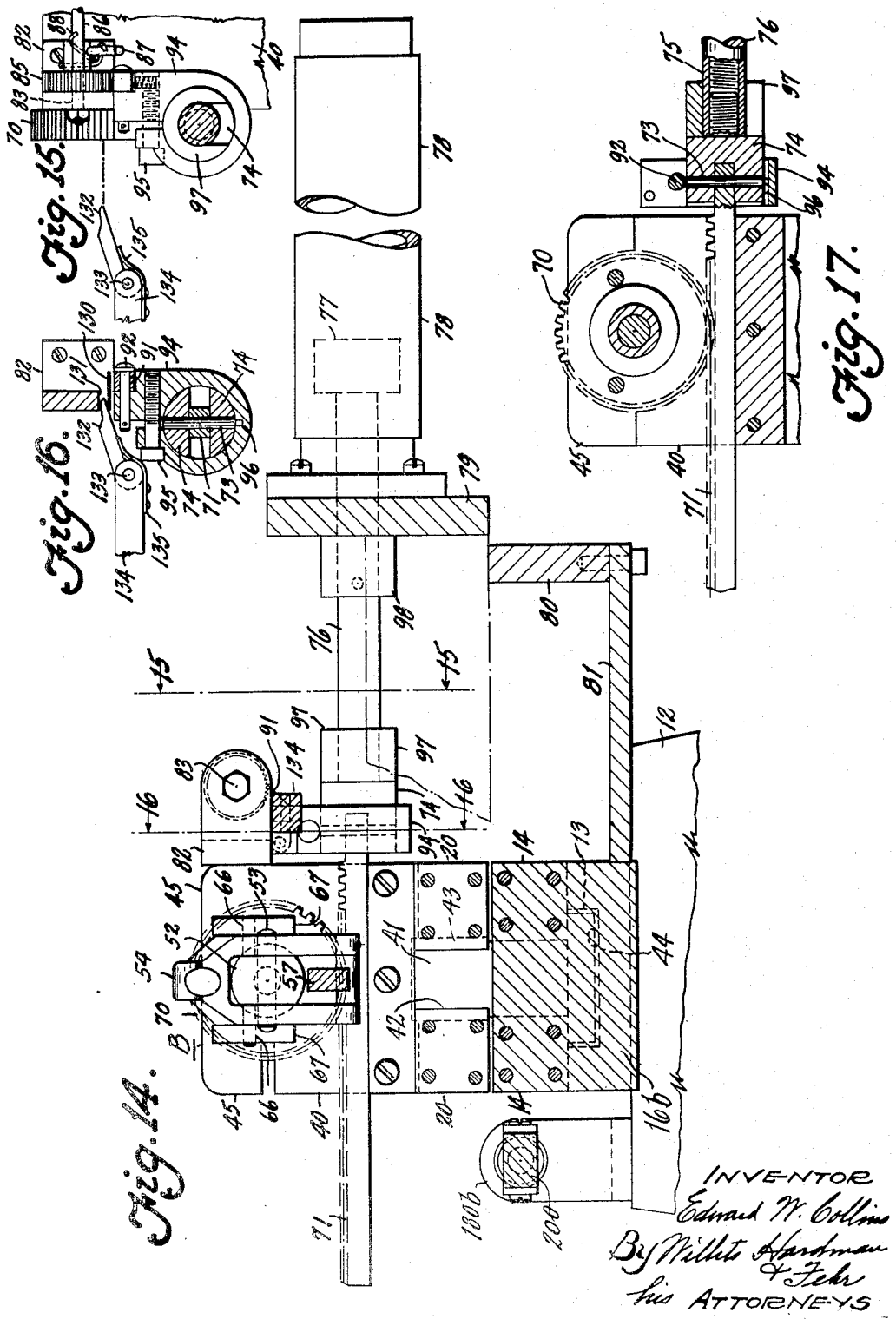

Fig. 14.

Fig. 15.

Fig. 16.

Fig. 17.

INVENTOR
Edward W. Collins
By Willett Hardman & Fehr
his ATTORNEYS

Oct. 28, 1952 E. W. COLLINS 2,615,639

MACHINE FOR WINDING ARMATURES

Filed Dec. 23, 1949 18 Sheets-Sheet 9

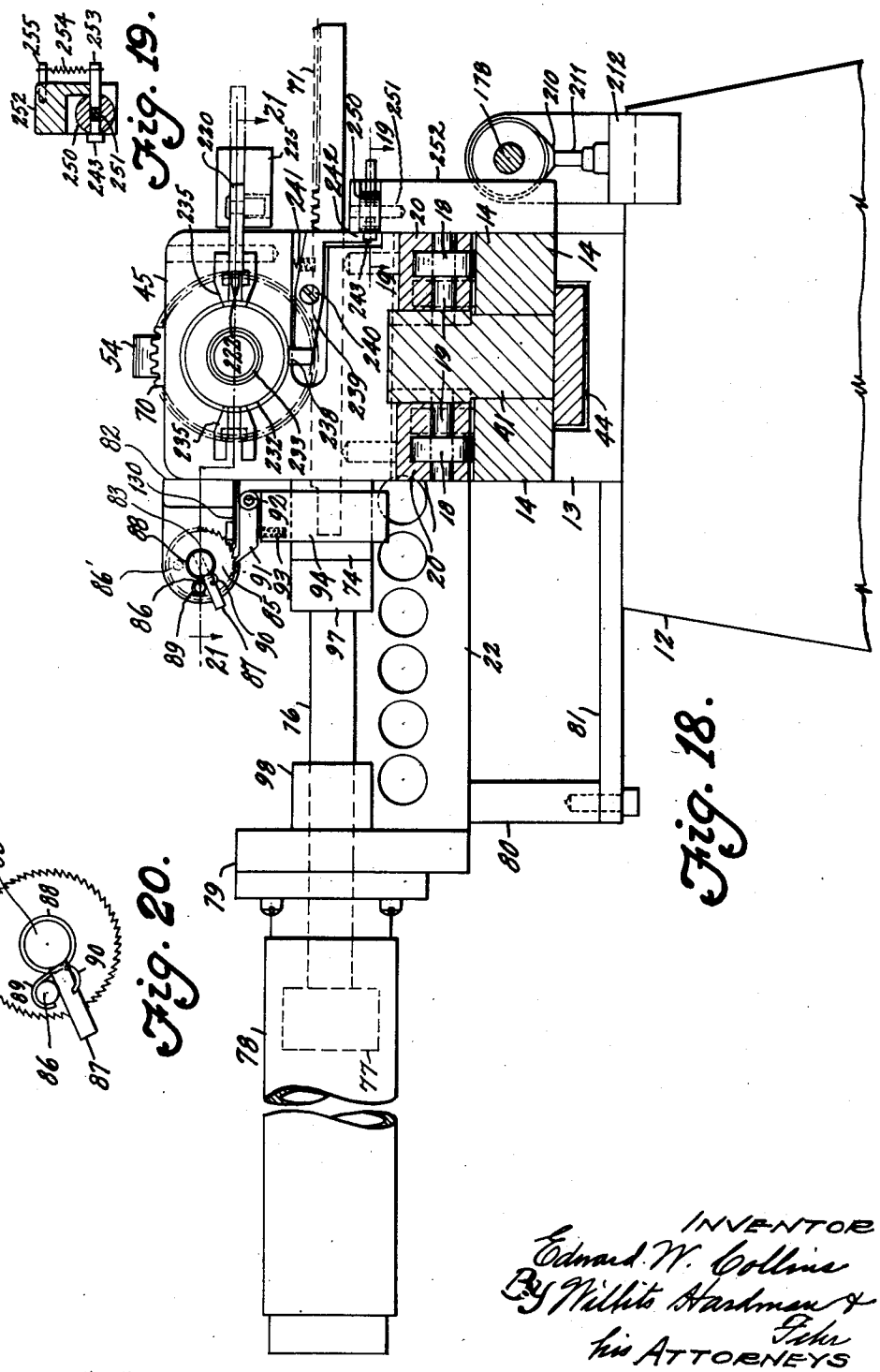

Fig. 19.

Fig. 20.

Fig. 18.

INVENTOR
Edward W. Collins
By Willits Hardman & Fisher
his ATTORNEYS

Oct. 28, 1952 E. W. COLLINS 2,615,639

MACHINE FOR WINDING ARMATURES

Filed Dec. 23, 1949 18 Sheets-Sheet 10

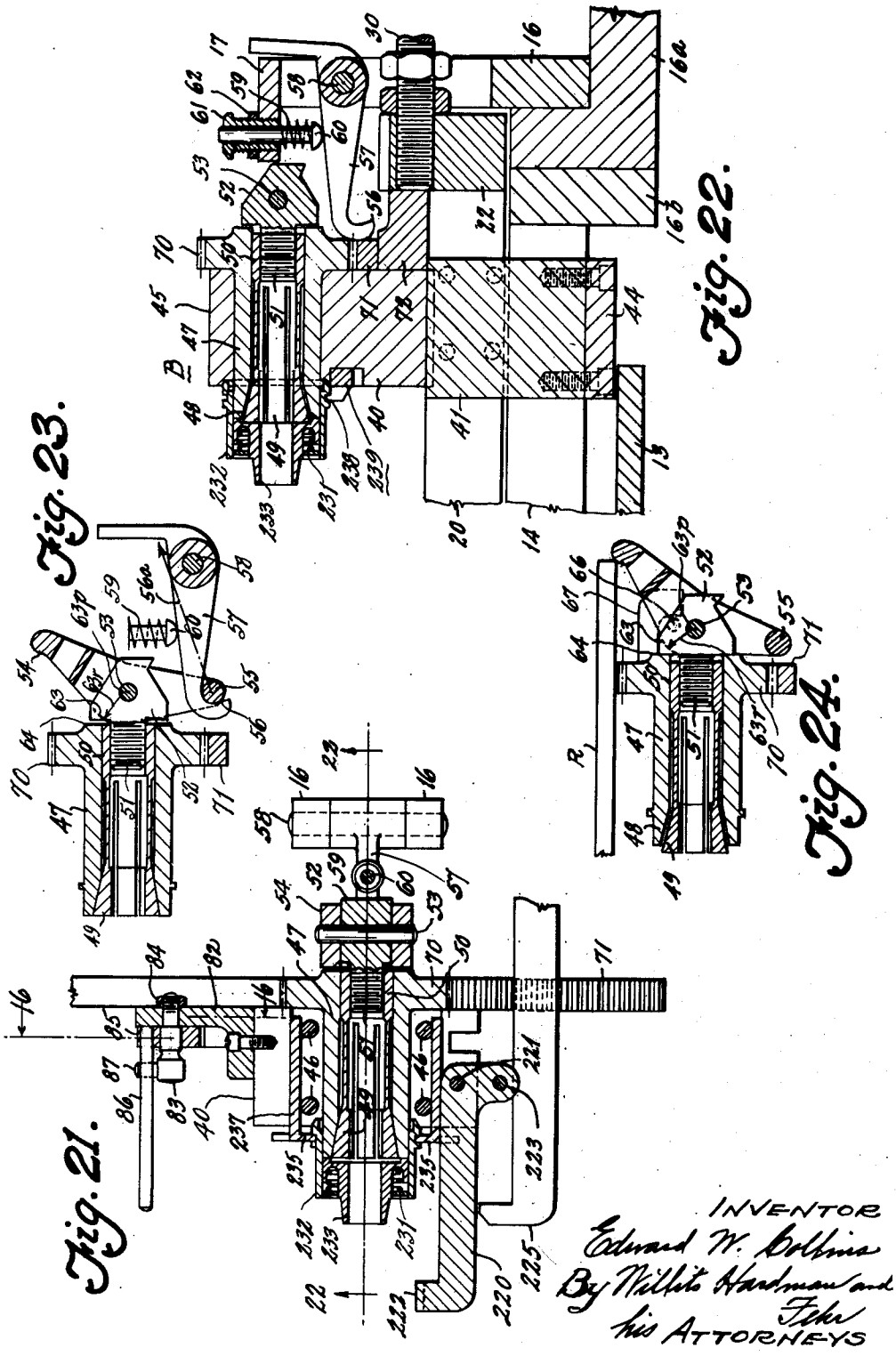

Fig. 21.

Fig. 22.

Fig. 23.

Fig. 24.

INVENTOR
Edward W. Collins
By Willett Hardman and Fike
his ATTORNEYS

Oct. 28, 1952 E. W. COLLINS 2,615,639

MACHINE FOR WINDING ARMATURES

Filed Dec. 23, 1949 18 Sheets-Sheet 11

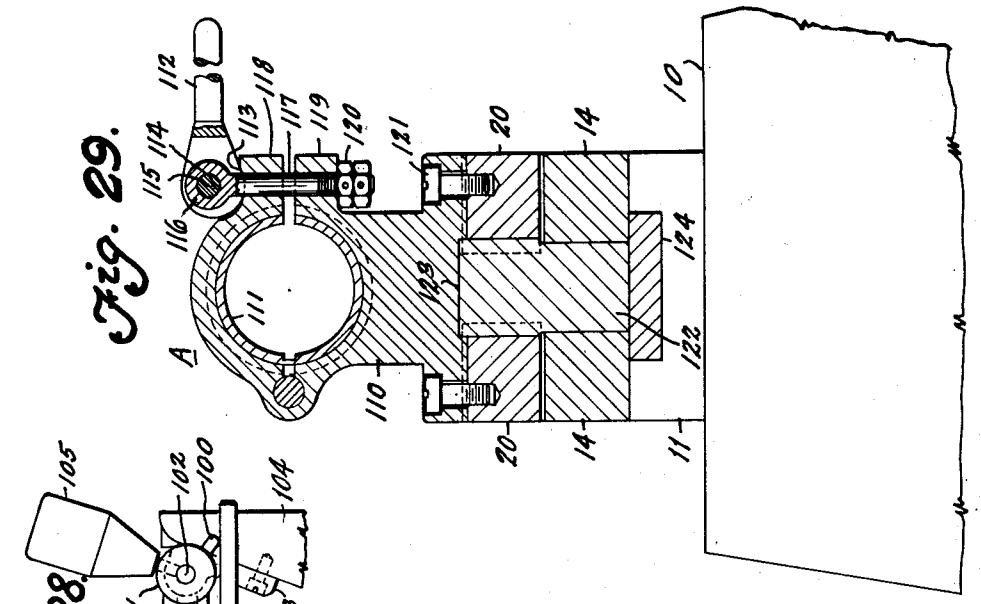

Fig. 29.

Fig. 28.

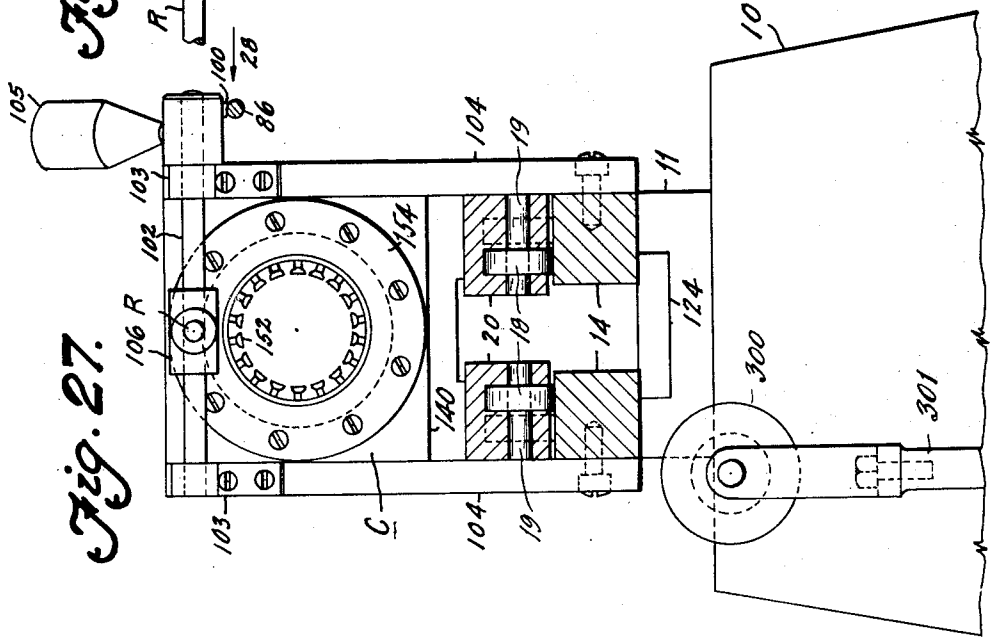

Fig. 27.

INVENTOR
Edward W. Collins
By Willis Hardman & Fyhr
his ATTORNEYS

Oct. 28, 1952 E. W. COLLINS 2,615,639

MACHINE FOR WINDING ARMATURES

Filed Dec. 23, 1949 18 Sheets-Sheet 12

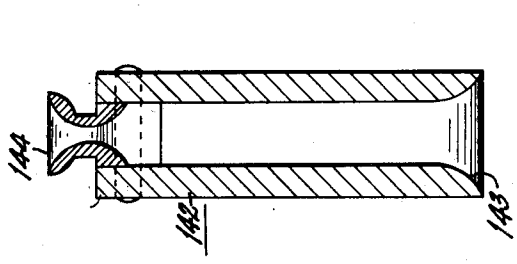

Fig. 32.

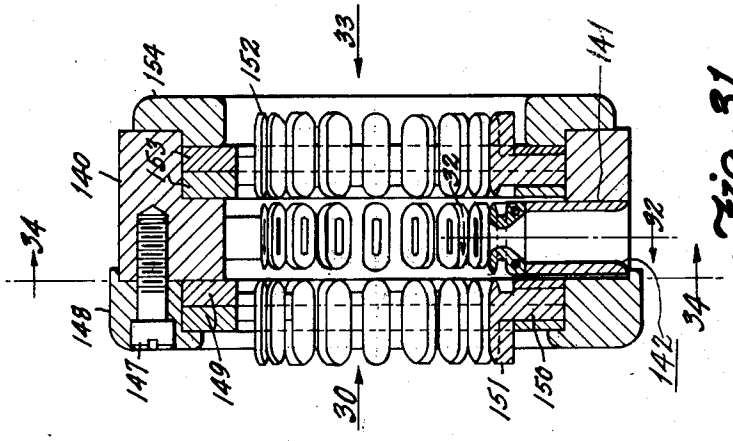

Fig. 31.

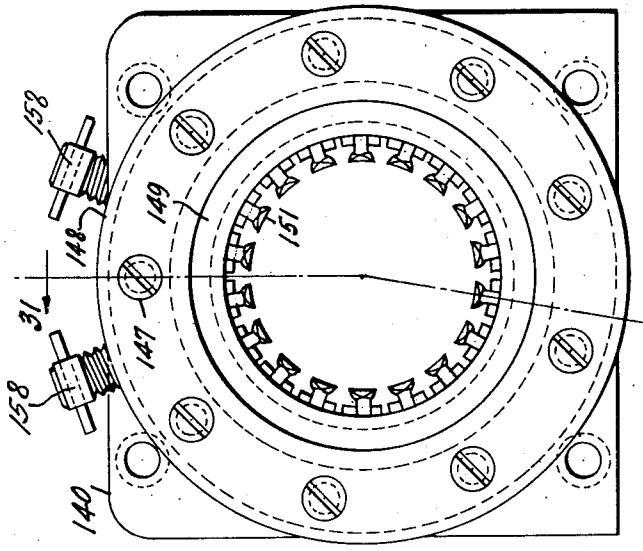

Fig. 30.

INVENTOR
Edward W. Collins
By Willis Hardman & Fish
ATTORNEYS

Oct. 28, 1952 E. W. COLLINS 2,615,639

MACHINE FOR WINDING ARMATURES

Filed Dec. 23, 1949 18 Sheets-Sheet 13

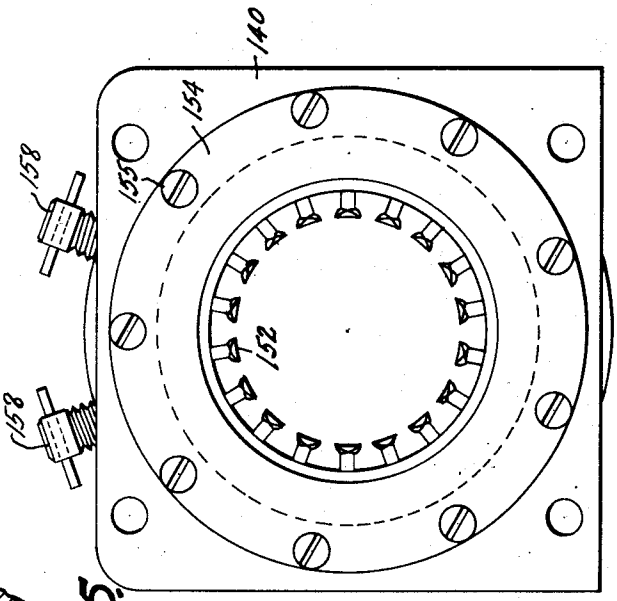

Fig. 33.

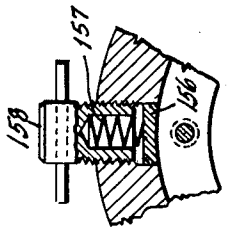

Fig. 35.

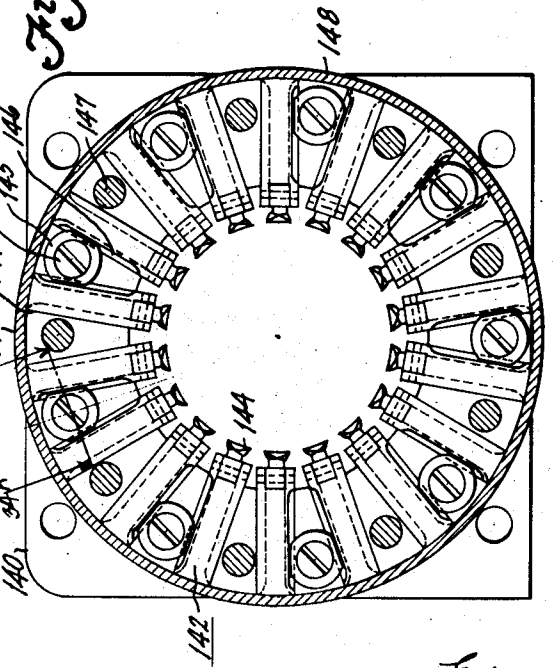

Fig. 34.

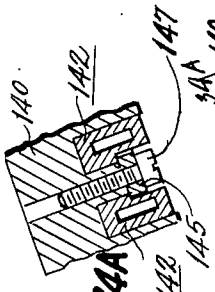

Fig. 34A

INVENTOR
Edward W. Collins
By Willits Hardman and Fisher
his ATTORNEYS

Oct. 28, 1952 E. W. COLLINS 2,615,639

MACHINE FOR WINDING ARMATURES

Filed Dec. 23, 1949 18 Sheets-Sheet 14

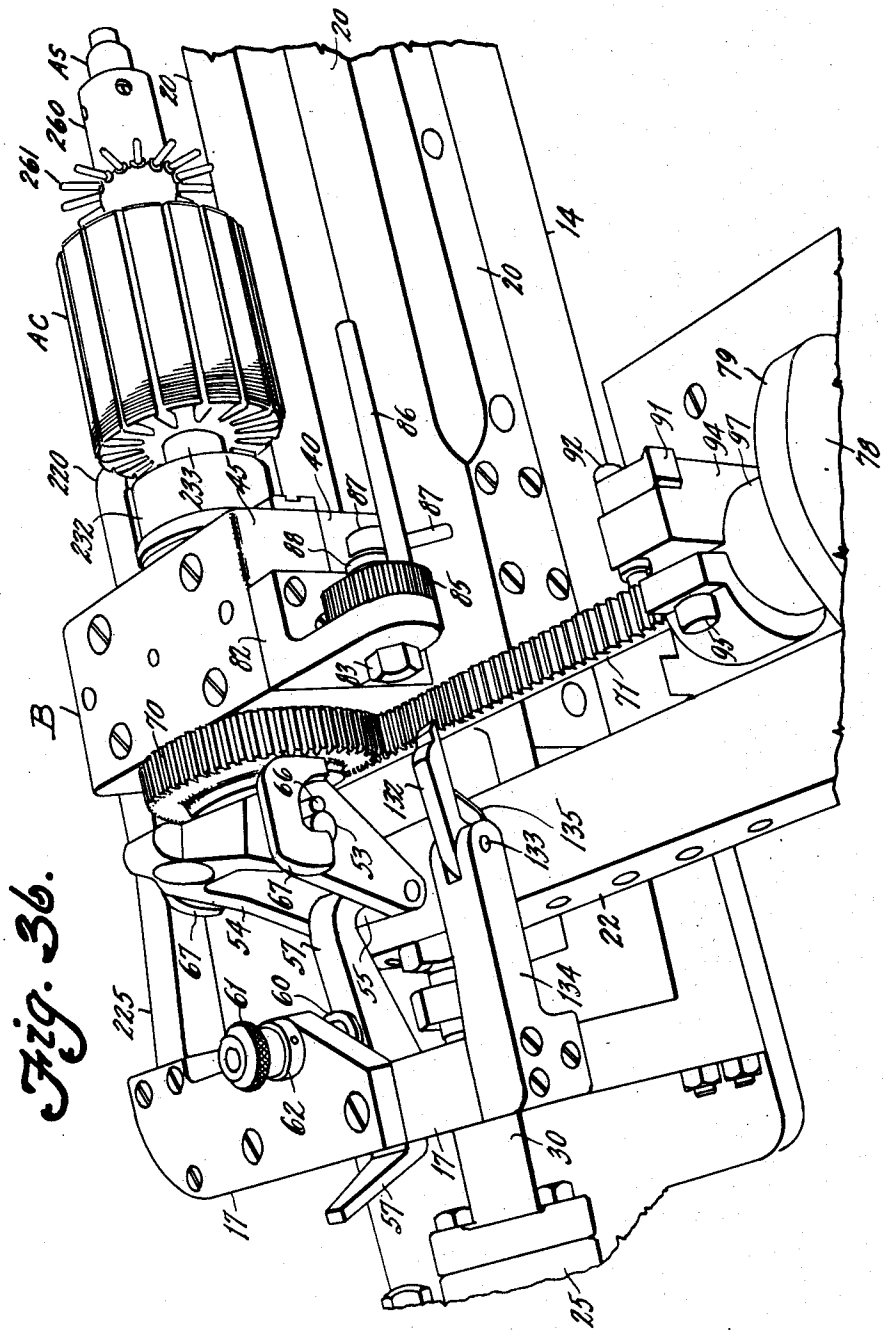

Fig. 36.

INVENTOR
Edward W. Collins
By Willitt Hardman and Fisher
his ATTORNEYS

Oct. 28, 1952 E. W. COLLINS 2,615,639

MACHINE FOR WINDING ARMATURES

Filed Dec. 23, 1949 18 Sheets-Sheet 15

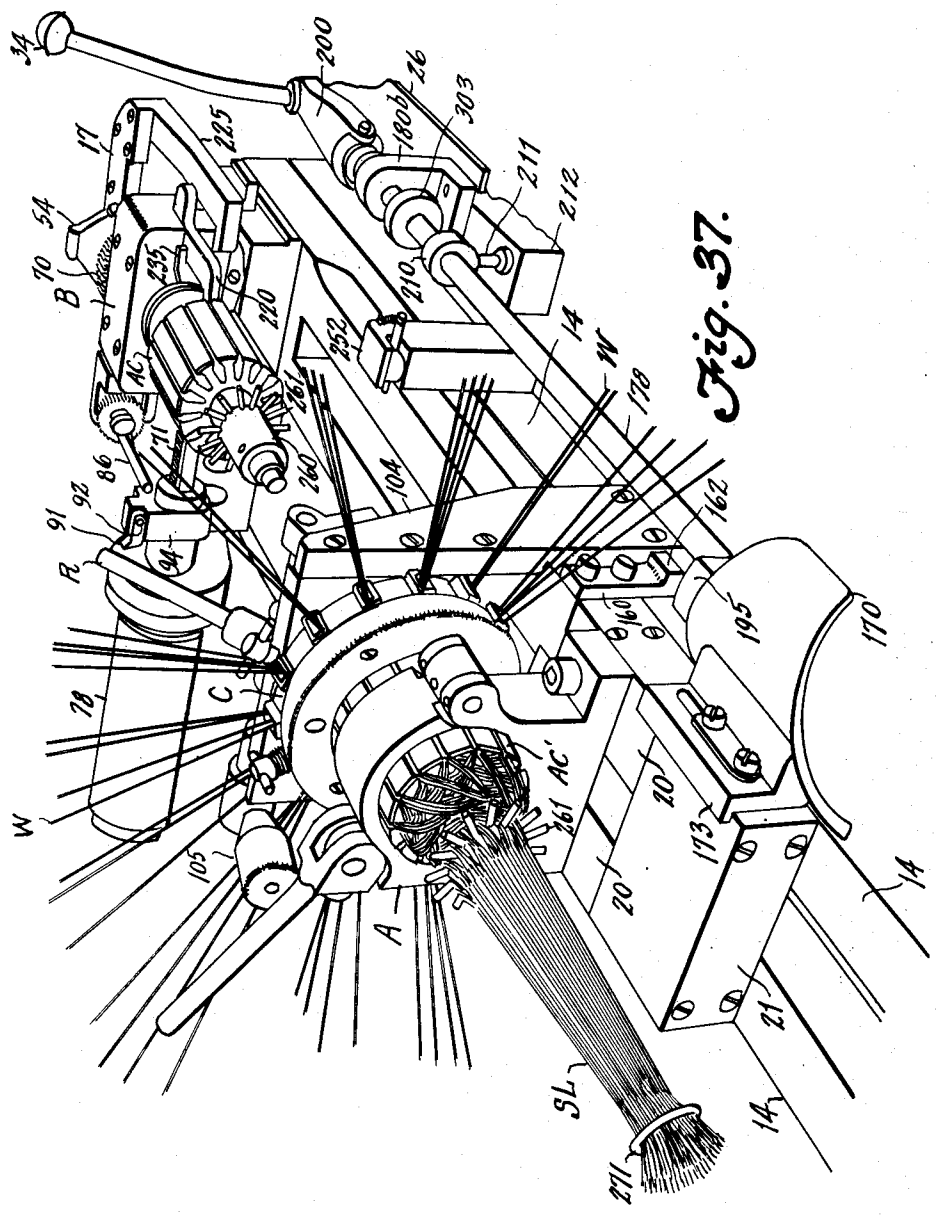

Fig. 37.

INVENTOR
Edward W. Collins
By Willitt Hardman & Fisher
his ATTORNEYS

Oct. 28, 1952 E. W. COLLINS 2,615,639

MACHINE FOR WINDING ARMATURES

Filed Dec. 23, 1949 18 Sheets-Sheet 16

Fig. 38.

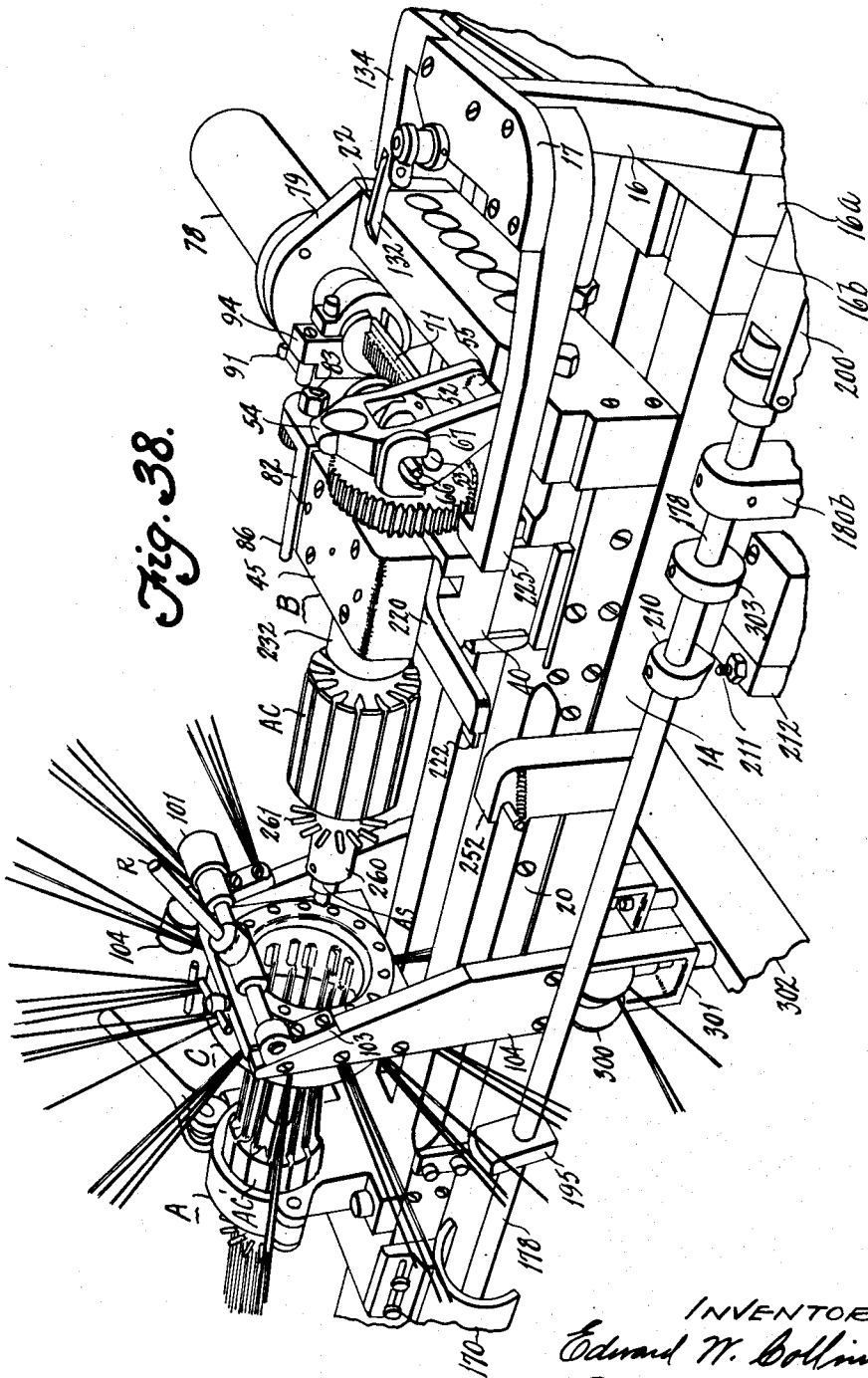

INVENTOR
Edward W. Collins
By Willett Hardman & Fisher
his ATTORNEYS

Oct. 28, 1952 E. W. COLLINS 2,615,639

MACHINE FOR WINDING ARMATURES

Filed Dec. 23, 1949 18 Sheets-Sheet 17

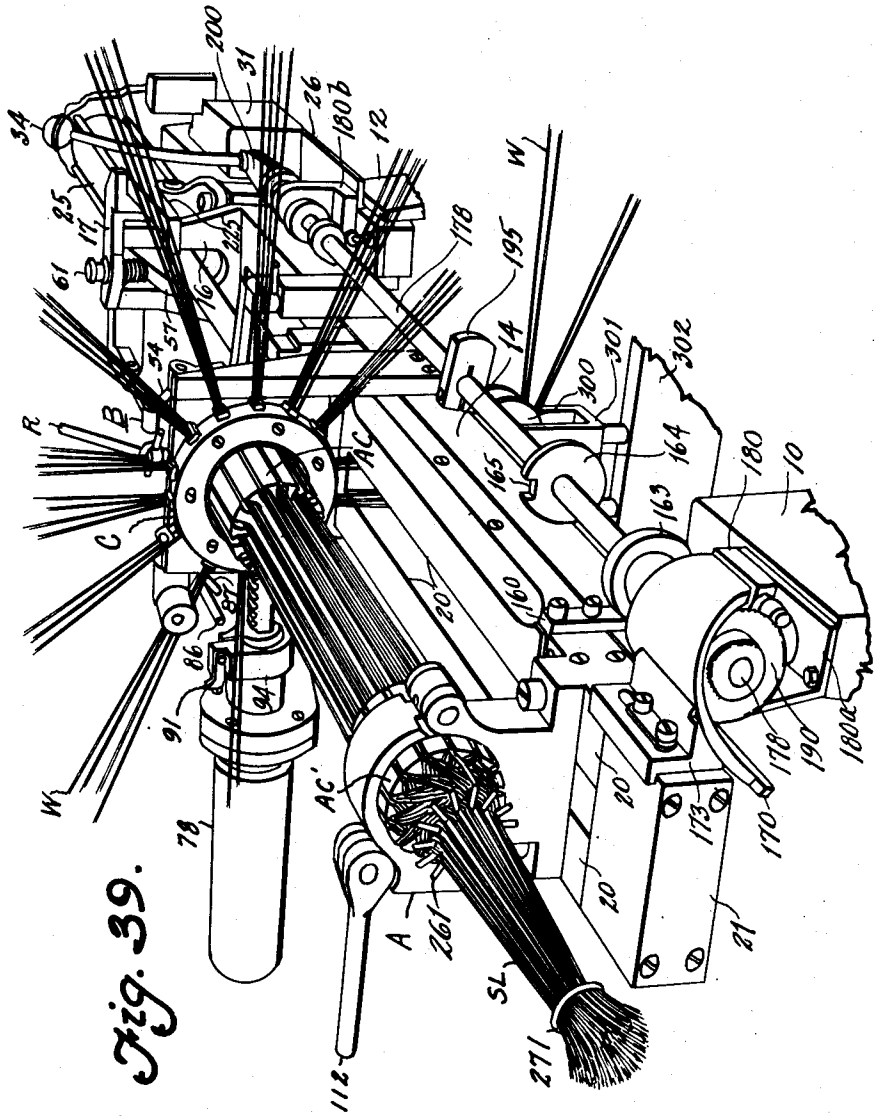

Fig. 39.

INVENTOR
Edward W. Collins
By Willitt Hardman & Fales
his ATTORNEYS

Oct. 28, 1952 E. W. COLLINS 2,615,639

MACHINE FOR WINDING ARMATURES

Filed Dec. 23, 1949 18 Sheets-Sheet 18

Fig. 40.

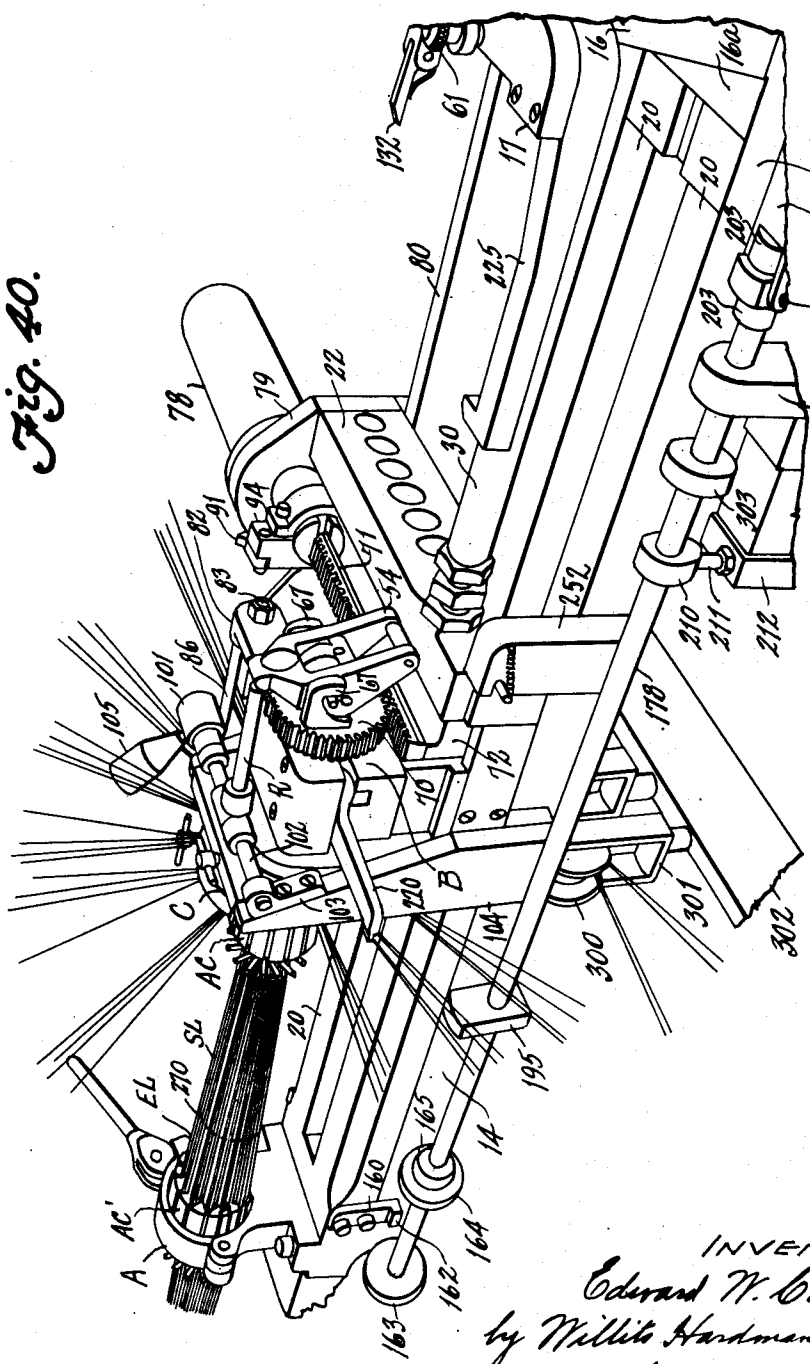

INVENTOR
Edward W. Collins
by Willits Hardman & Fish
his ATTORNEYS

Patented Oct. 28, 1952

2,615,639

UNITED STATES PATENT OFFICE

2,615,639

MACHINE FOR WINDING ARMATURES

Edward W. Collins, Anderson, Ind., assignor to General Motors Corporation, Detroit, Mich., a corporation of Delaware

Application December 23, 1949, Serial No. 134,781

17 Claims. (Cl. 242—13)

1

This invention relates to the winding of a slotted armature core with wires and its object is to provide a winding machine which will wind coils so that all of the end wires or leads of the coils extend from the outer portions of the core slots and at that end of the core adjacent to which the commutator is located. Since all of the coil leads extend from the core near the periphery thereof, it is easier to make the connections of these leads with the proper commutator bars and less space is required between the commutator and the core.

Further objects and advantages of the present invention will be apparent from the following description, reference being had to the accompanying drawings, wherein a preferred embodiment of the present invention is clearly shown.

In the drawings:

Figs. 1, 2 and 3 form a side view of the machine.

Fig. 1A is a fragmentary end view in the direction of arrow 1A of Fig. 1.

Fig. 4 is a fragmentary sectional view on line 4—4 of Fig. 1.

Figs. 5, 6 and 7 form a plan view of the machine.

Figs. 8, 9 and 10 on same sheet with Fig. 5 are sectional views, respectively, on lines 8—8, 9—9 and 10—10 of Fig. 5.

Figs. 11 and 12 are sectional views, respectively, on lines 11—11 and 12—12 of Fig. 2.

Fig. 13 is an enlarged sectional view on line 13—13 of Fig. 6.

Fig. 14 is a sectional view on line 14—14 of Fig. 2.

Figs. 15 and 16 are sectional views, respectively, on lines 15—15 and 16—16 of Fig. 14.

Fig. 17 is a sectional view on line 17—17 of Fig. 2.

Fig. 18 is a sectional view on line 18—18 of Fig. 2.

Fig. 19 is a sectional view on line 19—19 of Fig. 18.

Fig. 20 is an enlargement of a fragment of Fig. 18.

Fig. 21 is a sectional view on lines 21—21 of Figs. 2 and 18.

Fig. 22 is a sectional view on line 22—22 of Fig. 21.

Fig. 23 is a diagram illustrating chuck gripping.

Fig. 24 is a diagram illustrating chuck release.

Figs. 25 and 26 are on same sheet with Fig. 6 and are sectional views showing, respectively, pressure ring advancement and retraction.

Fig. 27 is a sectional view on line 27—27 of Fig. 2.

2

Fig. 28 is a view in the direction of arrow 28 of Fig. 27.

Fig. 29 is a sectional view on line 29—29 of Fig. 1.

Fig. 30 is an enlarged view of the threaded head in the direction of arrow 30 of Fig. 1.

Fig. 31 is a sectional view on line 31—31 of Fig. 30.

Fig. 32 is an enlarged sectional view on line 32—32 of Fig. 31 and shows one of the threader shoes.

Fig. 33 is a view in the direction of arrow 33 of Fig. 31.

Fig. 34 is a sectional view on line 34—34 of Fig. 31.

Fig. 34A is a fragmentary, sectional view on line 34A—34A of Fig. 34.

Fig. 35 is a sectional view on line 35—35 of Fig. 5.

Figs. 36—40 are perspective views showing steps in the use of the machine.

Leg frame 10 (Fig. 1) supports a plate 11 and leg frame 12 (Fig. 2) supports a plate 13. Plates 11 and 13 support bars 14 connected at their left end, as shown in Figs. 1A and 5, by plate 15 and connected at their right end, as shown in Figs. 2 and 11, by plates 16b and 16a (Fig. 22) which support a plate 16 which supports a plate 17 which appears at the right end of Fig. 6. The bars 14 (Fig. 18) provide rails engaged by rolls 18 journaled on rods 19 supported by bars 20. Bars 20 are connected at their left end by a plate 21 (Figs. 1A and 5) and at their right end by plate 22 (Fig. 12). The bars 20 and the connecting plates 21 and 22 provide a carriage which supports an armature clamp A (Fig. 1) near the left end of the carriage and an armature shaft chuck B (Fig. 2) near the right end of the carriage. The carriage is movable underneath a threading device C (Figs. 1 and 2).

The carriage is reciprocated by pressure fluid means providing a cylinder 25 (Fig. 3) supported at its left end by plate 16a. The cylinder 25 is supported at the right end by a brace 27 extending diagonally toward the leg frame 12 and attached thereto at its lower end. Cylinder 25 contains a piston 28, connected by rod 29 with a threaded coupling 30 connected with plate 22 (Fig. 12). The connection of a fluid pressure source with the ends of cylinder 25 is effected by valve 31 (Fig. 3) having an actuator 32 pivotally connected at 33 with a lever 34 pivoted at 35. Valve 31 has a base 31a attached to a plate 26 supported by leg frame 12 (Fig. 2).

The chuck unit B (Figs. 2 and 22) includes a block 40 attached to carriage bars 20 and having a recess 42 for receiving a block 41 (Fig. 14) re-

ceived by notches 43 in bars 20 and attached thereto and extending between bars 14 and attached to a plate 44 thereby retaining the carriage bars 20 upon the rails 14. Block 40 (Fig. 22) supports a cap portion 45 attached by screws 46 (Fig. 6). The block and cap provide a bearing for a shaft 47 having an internal conically tapered portion 48 for receiving the external conically tapered surfaces of the collet chuck members 49 integral with a hub 50 into which there is threaded the shank 51 of a screw having a head 52 which carries a pin 53 whose axis is intersected by the axis of the chuck shaft 47 and is at right angles thereto. The pin 53 pivotally supports a lever 54 providing at its lower end a pin 55 for engagement by the hook 56 of a lever 57 pivoted on a pin 58 supported by the plate 16 which, together with the plate 16*a*, is attached to bars 14. Lever 57 is urged downwardly by a spring 59 bearing against the head of a pin 60 guided by a bushing 61 threaded into plate 17 and secured in adjusted position by lock washer 62. The adjustment of bushing 61 adjusts the compression of spring 59. The lever 54 (Fig. 23) has cylindrical surfaces 63 engageable with a plane surface of an annular boss 64 at the right end of shaft 47. The surfaces 63 have a radius indicated by the arrow 63*r*, and the center of these surfaces is at 63*p*, which is above the center of pin 53. When the carriage bars 20 are moved left and carry the chuck unit B with them, the pin 55 engages the hook 56 of lever 57, as shown in Fig. 23. This causes the lever 54 to turn counterclockwise on pin 53. Likewise the center 63*p* of the curvature of surface 63 moves counterclockwise and the result is that the lever 54 fulcrums on the surface 64 of shaft 47 and pin 53 is moved to the right to cause the collet chuck members 49 to be pulled against the conical surface 48 of shaft 47 thereby causing the chuck members to grip an armature shaft AS (Fig. 2) which has been received by them before the chuck was drawn into gripping position. As left movement of the carriage continues, the lever 54 eventually separates from the lever 57 due to the fact that the direction of the pressure, indicated by arrow 56*a* (Fig. 23), is above the axis of pin 58. Therefore, when the pressure is great enough, the spring 59 is overcome and the pin 60 moves up to allow the lever 57 to release the pin 55 of lever 54.

To effect the opening of the chuck, the upper end of lever 54 is engaged at a certain time in the machine cycle by rod R, as shown in Fig. 24. This causes pins 66, carried by lever 54, to move into engagement with lugs 67 supported by shaft 47; and, after pins 66 have engaged lugs 67, lever 54 turns upon lugs 67 clockwise thereby causing the pin 53 to move to the left to move the collet members 49 away from the surface 48 of shaft 47.

To provide for rotation of the chuck and armature shaft supported thereby the shaft 47 provides a gear 70 meshing with a rack 71 (Figs. 21 and 22) supported by bearing plate 72. Rack 71 is connected as shown in Fig. 17 by pins 73 with a coupling 74 threadedly connected with a coupling 75 which is threadedly connected with a rod 76 which, as shown in Fig. 14, is connected by a piston 77 within a cylinder 78 supported by a plate 79, which, as shown in Fig. 12, is attached to plate 22 so that the cylinder 78 will move with the carriage bars 20. The weight, which overhangs from plate 22, is supported by a plate 80 (Figs. 12 and 14) attached to a plate 81 supported by leg frame 12.

The cap 45 of block 40 (Figs. 12 and 14) supports a bracket 82 which supports a screw stud 83 (Fig. 21) retained in the desired position of angular adjustment by a nut 84. Stud 83 pivotally supports a ratchet 85 which, as shown in Figs. 6 and 18, carries a rod 86 extending parallel to the axis of the ratchet. The stud 83, which is relatively fixed, supports a cross pin 87 and is surrounded by a torsion spring 88, one end 89 of which is hooked around the rod 86 and the other end of which is hooked around the pin 87. If the ratchet 85 is not prevented from rotating counterclockwise (Fig. 18) by a pawl to be described, the spring 88 operates to move the ratchet counterclockwise until the rod 86 engages the pin 87, as shown in Figs. 18 and 20. To effect movement of ratchet 85 clockwise (Fig. 18), there is a pawl 91 pivoted on a pin 92 supported by a bracket 94 and urged upwardly by a spring 93 received by a pocket in bracket 94. Bracket 94 is a split, clamp bracket (Figs. 15 and 16) which a screw 95 clamps around the coupling 74 of Fig. 17. The pin 73 has an extension of reduced diameter at its lower end (Fig. 17) received by a groove 96 in the bracket 94 whereby the clamp bracket 94 is non-rotatable with respect to the coupling 74 along which it may be axially adjusted.

Each time the piston 77 moves toward the right in Fig. 14 or to the left in Fig. 18, the pawl 91 engages the ratchet 85 to move it a certain distance clockwise (Fig. 18) depending on the adjustment of bracket 94 relative to the coupling 74. The travel of piston 77 is determined in one direction by the abutment of bracket 94 with the block 40 and in the other direction by the abutment of a U-block 97 (Figs. 14 and 15) with the tubular boss 98 extending from plate 79. The U-block 97 may be one of several blocks of different thicknesses to determine the extent of the right movement (Fig. 14) of piston 77.

After a certain number of movements of piston 77 the rod 86 will have been moved such a distance away from the pin 87 that at about the end of the movement of the carirage to the left the rod 86 will engage a pin 100 attached to a hub 101 (Fig. 28) connected to a shaft 102 journaled in brackets 103 supported by plates 104 attached to rails 14 (Fig. 27). Hub 101 carries a weight 105. Shaft 102 is attached to a hub 106 carrying the rod R. Movement of pin 100 by rod 86 causes rod R (normally located as shown in Fig. 2) to move into a horizontal position. Thereafter, as left movement of the carriage continues, rod R is in position to be engaged by lever 54 to effect the ungripping of the collet chuck as shown in Fig. 24. It is therefore apparent that at a certain time in the machine cycle the armature A is released from the chuck unit B in the carriage so that it may be supported by the clamp unit A shown in Fig. 29.

The clamp unit A comprises a split clamp bracket 110 receiving a split liner 111 adapted to engage the armature core. The clamping is effected by a lever 112 having a hub surface 113 coaxial with a center point 114 which is below the center of a pin 115 connecting the lever 112 with an eye 116 of a rod 117 passing through the bifurcations 118 and 119 of the bracket and receiving nuts 120. When the lever 112 is vertical, the armature core can be received loosely within the liner 111. When lever 112 is turned down into the position shown, the armature is clamped since the center of eye 116

is located above the center 114 of curvature of the surfaces 113 which bear on bifurcations 118 while the pull on the rod 117 causes a nut 120 to bear against the lower bifurcation 119.

Screws 121 attach the bracket 110 to the carriage bars 20 which are attached to a block 122 located between the bars 20 and received by a recess 123 in bracket 110 and extending down between the rail bars 14 and attached to the plate 124. This construction like that associated with the chuck unit B serves to retain the carriage upon the rails.

Referring to Fig. 18, when the ratchet 85 is moved clockwise by left movement of piston 77, the ratchet is retained against the action of spring 88 by a leaf spring pawl 130 attached to bracket 82 as shown on larger scale in Fig. 13. A notch 131 is provided in bracket 82 for receiving a pawl 132 (Fig. 16) pivoted on a pin 133 attached to an extension 134 of plate 17 (Fig. 6). A leaf spring 135 attached to part 134 maintains the pawl 132 in the position as shown in Fig. 15. When the carriage moves fully to the right as shown in Fig. 6, the bracket 82 moves to the left from the position shown in Fig. 15 to that shown in Fig. 16 so that notch 131 receives the pawl 132 which wedges in between the bracket 82 and the pawl 130 thereby pushing that pawl away from the ratchet 85 so that the spring 88 is released to move the ratchet 85 counterclockwise (Fig. 18) so that the rod 86 returns into engagement with the pin 87. Pin 86 is about in the dot-dash line position 86' when located so as to trip the mechanism which effects the ungripping of the collet chuck. As shown the pin 86 moves about 90° from initial position before the collet chuck ungrips. As will be more apparent hereafter this movement corresponds to a required number of turns to be placed on the armature core. As this number may vary, the extent of the movement of rod 86 from normal position is determined by the initial location of pin 87 which can be changed by loosening the nut 84 and turning the stud 83.

The wire threading unit will now be described with reference to Figs. 27 and 30–33. Plates 104 (Fig. 27) support a block 140 which, as shown in Figs. 31 and 34, is provided with radial grooves 141 each receiving a threader tube 142 of oblong cross section. As shown in Fig. 32, each threader tube has a flared outer end 143 and supports at its inner end a threader shoe 144 shaped so as to be received in the outer end portion of a core slot. These threader tubes 142 are all adjusted so that the shoes 144 are in a circular row concentric with the axis of the armature. The tubes 142 are secured in adjusted position by clamping washers 145 engaging flats 146 of the tubes and attached to the block 140 by screws 147. Screws 147 attach to block 140 a ring 148 which, together with the block 140, provides a bearing for rotatably supporting two similar ring plates 149 which are notched to receive the shanks 150 of shoes 151 which line up with the shoes 144 and serve to compress the windings into the armature core slots. The rings 149 are attached to the shoes 151. Similar shoes 152 at the right of Fig. 31 are attached to ring plates 153 which are journaled in bearings provided by block 140 and a ring 154 (Fig. 33) which screws 155 attach to block 140. As shown in Fig. 35, each pair of rings 149 or 153 is engaged by brake shoe 156 urged by a spring 157 to press against the ring, said spring being retained by an adjusting screw 158 threaded through the ring 148 or through the block 140. Therefore the shoes 151 and 152 do not accidentally rotate out of alignment with the threader shoes 144 when no core is present to maintain such alignment. The wires to be threaded in the armature core slots are passed through the threading tubes 142 and shoes 144, said wires being supplied by reels which as shown in my copending application Serial No. 20,325, filed April 10, 1948, now Patent No. 2,561,562, are located on a rack which surrounds the threading unit.

Referring to Figs. 1 and 5, during operation of the machine to thread wire into the core slots, motion of the carriage is limited by the engagement of the lug 162 of a bar 160 (attached by screws 161 to a carriage bar 20) with two rotatable stop discs 163 and 164. As shown in Figs. 1, 5 and 37, the bar 160 is not located between the stop discs 163 and 164 but is located considerably to the right of disc 164. At a certain time in the operation of the machine, this lug 162 is allowed to pass through a notch or gate 165 in disc 164 when said gate has been aligned with the lug. This permits movement of the carriage to its extreme right position as shown in Figs. 1 and 2 thus placing the clamping unit A near the therader unit C at the time when the collet chuck is released so that the armature can be transferred from the threader unit C to the clamping unit A. Following this, the movement of the carriage to the left permits the plate 160 to pass to the left of the disc 164 and into engagement with disc 163. The position of the plate is then 160' and that of the clamping unit is A' in Fig. 1. During this movement to the left of the carriage 20, there is left movement of a cam 170 adjustably attached to the carriage by screws 171 which pass through a slot 172 in a bracket 173 which supports the cam and which are threaded into the carriage end bar 21. This cam engages a roller 175 (Fig. 9) pivoted on a screw 176 threaded into a hub 177 which is journaled on a shaft 178. This cam movement causes the pin 176 to move clockwise in Fig 9, so that the part 177*a* of the hub 177 moves away from pin 179*a* which, as shown in Fig. 8, extends from a ring 179 journaled coaxially of the shaft 178 by bracket 180 which supports said shaft. Bracket 180 is supported by a plate 180*a* which together with the plate 11 is attached to leg frame 10. Ring 179 is secured in the desired position around the shaft 178 by the tightening of a screw 181 which extends through a round hole in bracket 180 and threadedly engages an arcuate washer 182 received by an arcuate, counterbored slot 183 into ring 179. This movement of hub 177 in a clockwise direction (Fig. 9) away from the rod 179*a* causes clockwise movement of the pivot screw 188 (Fig. 1A) carried by the hub and pivotally supporting a pawl 189 urged by a spring 189*a* into engagement with a ratchet 190 connected with shaft 178. The shaft 178 is thereby rotated clockwise and the discs 163 and 164 connected with the shaft are likewise rotated. This causes the gate 165 in disc 164 to be disaligned with the lug 162 of bar 160 then at 162'. Therefore, the next right movement of the carriage will stop when the lug 162 engages the disc 164. Therefore, the reciprocation of the carriage for a time will be limited by these stop discs which can be adjusted along the shaft 178 with which they are connected by keys such as 163*a* in Fig. 8, engaging a groove 178*a* of the shaft. The discs are

tightened on the shaft by screws 163s and 164s (Fig. 1).

During reciprocation of the carriage which is limited by movement of the bar 160 between the stop discs 163 and 164 the roller 175 is urged against the cam 170 located at 170' (Fig. 1) by a weight 191 (enclosed in a tube 192 attached to leg frame 10) connected by a metal ribbon 193 with the hub 177, as shown in Fig. 4. As the carriage reciprocates in this limited fashion ratchet 190 is caused to turn clockwise by a step-by-step motion until finally the gate 165 in disc 164 is aligned with the lug 162 of plate 160. Then the carriage may move right to its fullest extent to move the cam 170 from the position 170' to full line position (Fig. 1). The cam 170 having released the roller 175, the weight 191 descents and rotates the hub 177 counterclockwise until it is engaged by the stop pin 179a. The stop pin 179a being adjustable angularly, the number of reciprocations of the carriage required to register the gate 165 with the lug 162 can be adjusted to the required number before the carriage can move to the extreme right position.

During movement of the carrige to its extreme right position, the cam 170 engages a stop plate 195 which is clamped by screw 196 in adjusted position along the shaft 178. The shaft can move a slight amount to the right to effect a movement of the control lever 34 (Fig. 3). This movement is effected by a connection which includes a link 200 attached to pivot pin 33 (Fig. 3) and connected by pin 201 with a collar 202 loose on the shaft 178 and confined between two collars 203 pinned to the shaft. The right movement which shaft 178 receives causes lever 34 to move to a position causing valve 31 to be neutral, that is, both ends of the cylinder 25 are disconnected from the pressure source. Valve 34 is manually moved in either direction from neutral to effect reciprocations of the carriage. The application of pressure fluid to the ends of cylinder 78 (Fig. 14) is controlled by a manually operated valve, not shown.

When the shaft 178 has been turned into a position corresponding to the placing of the last turn of wire on the armature core, a cam 210 thereon (Figs. 2 and 18) engages an actuator 211 of a switch 212 which then connects a current source with a lamp to indicate that the turns of wire have been placed on the core. When the armature shaft is placed, as shown in Fig. 2, in the chuck prior to the gripping thereof, the core is located angularly by moving clockwise a lever 220 pivoted at 221 on block 40 so that its end 222 may be received between core teeth. In order to be sure that the lever does not remain in the core as the carriage moves to the threader, the lever 222 is moved counterclockwise by engagement of a pin 223 of the lever with the hook 224 of a bar 225 extending from plate 17.

The core, as shown in Fig. 25, on the same sheet, as Fig. 6, includes iron laminations between end laminations 230 of the same shape as the iron laminations. These end laminations are made of fiber for insulating purpose and are not so stiff as the iron laminations. As the armature moves through the threader from right to left the threader shoes tend to drag the right lamination 230 away from the core. In order to prevent this before winding of wires on the core, a spring 231 is permitted to expand and push a tubular member 232 against the right side of the insulating lamination 230. The tube 232 surrounds a member 233 which immediately surrounds the armature shaft AS, said spring 231 pushing member 233 against the end of the shaft 47. Normally the tube 232 is to the right of the projecting end of the member 233, member 233 engaging a flange 234 of the shaft 47. Member 232 is held in this relation by lugs 235 (Fig. 21) received by groove 236 of member 232 and integral with bars 237 which are guided by the block 40 for axial movement. The groove 236 receives a lug 238 of lever 239 which, as shown in Fig. 18, is pivoted on a screw 240 and is urged clockwise by a spring 241 so that the lug 238 is urged into the groove 236. During forward or left movement of the carriage from the position shown in Figs. 2 and 6, a tail 242 of lever 239 engages a pin 243 which then is fixed. The pin 243 engages the beveled surface 244 of the tail 242 and causes counterclockwise movement of lever 239 as viewed in Fig. 18 thereby releasing its hold on the member 232 so that the spring 231 will force it against the right non-conducting lamination 230. At the end of the winding when the armature core is located at the left of the threader unit C the flange 236a of the member 232 engages the shoes 152 thereby causing such movement of member 232 relative to the block 40 that the beveled surface of the flange 236b of member 232 engages a beveled surface (Fig. 22) of lug 238 and cams the lever 239 counterclockwise as viewed in Fig. 18 so that the groove 236 can be brought into alignment with the lug 238 whereupon the spring 241 presses the lever 239 clockwise to cause the lug 238 to be received by the groove 236 and thus retain the member 232 in position as shown in Fig. 26. During the next right movement of the carriage the tail 242 of the lever 239 will engage the stop pin 243 but this pin will merely swing out of the way and will not trip the lever 242. Pin 243 is therefore pivotally mounted. Pin 243 is attached to a disc 250 (Figs. 6 and 18) pivoted on a pin 251 attached to a plate 252 fastened to a rail 14. Disc 250 carries a pin 253 connected by spring 254 with a pin 255 attached to plate 252. The spring urges the pin 253 against the stop 256 provided by plate 252. When the carriage moves right to return the chuck unit B to initial position, the tail 242 of the lever 239 engages the pin 243 and causes it to move and cause the disc to rotate clockwise against the action of the spring 254 which is very light in comparison to the spring 241 shown in Fig. 18. Therefore the stop 243 is merely pushed out of the way until it clears the tail 242 of lever 239 and the spring 254 holds the pin 253 against the stop 256.

The armature shaft AS is mounted in the chuck unit B as shown in Figs. 36 and 37. The locating lever 220 is moved so as to be received between core teeth when the core AC is rotated. The wires W extend through the threader unit C and are anchored to the core AC' of a previously wound armature clamped by the unit A. If core AC is the first of a series to be wound, there would not be any wound core in the clamp A. In that case, an empty core may be placed in the clamp A and the wires W would be manually threaded through its slots and anchored. The lever 34 (Fig. 3) is moved by the attendant in the direction to cause pressure fluid to enter the right end of cylinder 25 to cause the carriage core to move left as shown in Fig. 38. As the core AC approaches the threader C, the clamp A moves away from it. This movement of the carriage stops when the lug 162 of plate 160

engages stop disc 163; and the unwound core AC and the wound core AC' are then located as shown in Fig. 39. Pressure fluid is then admitted to the left end (Fig. 39) of cylinder 78 to cause the core AC to rotate counterclockwise, pressure fluid is admitted to the left end of cylinder 25 to cause the carriage to move back in Fig. 39 a distance determined by the engagement of lug 162 of plate 160 with stop disc 164, pressure fluid is admitted to the right end of cylinder 78 to cause the core AC to rotate clockwise and pressure fluid is admitted to the right end of cylinder 25 to cause the carriage to move forward again to the position shown in Fig. 39. This cycle is repeated until the required number of coils have been wound upon the core. Winding ends with the chuck unit B and clamp unit A located as shown in Fig. 40. Rod 86 has caused rod R to be located horizontally and rod R has been engaged by lever 54 and the chuck has released the armature shaft. Core AC which has been wound is still connected by lead wires with the previously wound core AC'. These connecting wires are cut as indicated by dot-dash line 270 to divide the wires into start leads SL for the coils on core AC and end leads EL for the coils on core AC'. The start leads SL of the coils on core AC' appear in Fig. 39. After cutting the wires, the wound core AC' is released from clamp A and is removed. Gate 165 of stop disc 164 is then aligned with lug 162 of plate 160. Pressure fluid is admitted to the left end of cylinder 25 so that the carriage will move back to the position shown in Fig. 37. This locates the chuck unit B in position to receive an empty core still at threader C. This core is then clamped by the unit A and an empty core is mounted on the chuck unit; and, winding proceeds as before.

After the core AC' is removed, the start leads SL are bunched together by an elastic band 271 (Figs. 37 and 39). After removing the wound core from the clamp A, the start leads SL are bent upon the cross over wires at that end of the core from which these leads had emerged and are placed in the proper core slots and staking pegs are driven longitudinally through the tops of the slots to retain the coils in the core.

Each threader tube 143 receives a group of wires. In order to facilitate picking out the start leads of the respective wire groups, these start leads are divided into groups by pins 261 (Fig. 39) extending radially from a sleeve 260 which, as shown in Fig. 37, is placed upon the shaft AS of an empty core. This sleeve has a friction device not shown which engages the shaft to prevent accidental rotation of the sleeve after having been turned so that the pins 261 are aligned with core teeth. As the sleeve 260 (Fig. 38) moves through the threader C, the wires extending between cores AC and AC' are received between the pins 261.

As stated before, the start leads are placed within the outermost portion of the core slots. The commutator is pressed upon that portion of the armature shaft adjacent to the end of the core from which all the leads emerge. The start leads are bent away from the end leads which are the first to be connected with their proper commutator bars by staking them into notches which the bar risers provide. Then the start leads are connected with their proper commutator bars in the same manner. The insulation of these leads may have tracer threads or may have different colors to identify them. Since the start leads emerge from the outer instead of the inner portions of the core slots and can be bent outwardly from the end leads, the likelihood of confusion between end leads and start leads is very remote. The work of connecting leads with commutator bars proceeds more rapidly since there are no leads which extend from inner portions of core slots which are obviously considerably closer to the armature shaft than the commutator riser bars. It is easier to apply the insulation wrapping between the layers of start and end lead wires when all of these lead wires emerge from the outer portions of the core slots; and the commutator can be located closer to the core than would be practical if the start leads emerged from the inner portions of the core slots.

Referring to Fig. 38, wires which pass into lower portions of the threader C are guided by grooved wheels 300 mounted on brackets 301 attached to a bar 302 which is part of the wire spool supporting rack.

The disc 303 (to the right of bar 302) is attached to the shaft 178 and is manipulated for the purpose of turning the shaft 178 when making initial adjustment of the machine.

While the embodiment of the present invention as herein disclosed, constitutes a preferred form, it is to be understood that other forms might be adopted.

What is claimed is as follows:

1. A machine for simultaneously winding armature coils on a slotted core mounted on an armature shaft, said machine comprising; a fixed threader having radially disposed tubes, the inner ends of which provide shoes in an annular row and adapted to be received respectively by core slots, said tubes receiving wires from supply spools, a carriage track supporting the threader, a carriage supported and guided by the track and movable parallel to the threader axis, a chuck rotatably supported by the carriage and located on one side of the threader and adapted to grip the armature shaft and to support it in alignment with the threader, means for controlling the chuck for gripping or releasing the shaft, a clamp supported by the carriage on the other side of the threader and adapted to receive and grip the core when left in position on the clamp side of the threader tubes, after the chuck has been conditioned for release of the shaft, means for tightening or releasing the clamp, means for moving the carriage in either direction longitudinally with the chuck and means for rotating the chuck in either direction.

2. A machine according to claim 1 in which the carriage is movable through a range sufficient to move the chuck from loading position corresponding to which the clamp is in core recieving position to a position corresponding to which the core end facing the chuck is clear of the end of the threader shoes facing the clamp, in which means are provided for limiting movement of the carriage to a range such that the core can be moved from the second mentioned position to a position such that the core end facing the clamp clears the ends of the threader shoes which face toward the chuck, in which means are provided for rendering the range limiting means operative to response to the movement of the carriage from loading position to place the core on the clamp side of the threader shoes and for rendering the range limiting means non-operative after a predetermined number of movements of the carriage in the limited range.

3. A machine according to claim 1 in which the carriage is movable through a range sufficient to move the chuck from loading position corresponding to which the clamp is in core receiving position to a position corresponding to which the core end facing the chuck is clear of the end of the threader shoes facing the clamp, in which a stop lug is attached to the carriage, in which there are two stops between which the lug is movable to limit the movement of the carriage from the second mentioned position thereof to a third position corresponding to which the core end facing the clamp clears the ends of the threader shoes facing the chuck, the stop which arrests movement of the carriage in its third position being a rotatable disc having a notch which, in one position of the disc, provides a gate to admit the lug to the region between the stops as the carriage moves from first or loading position to the second position, in which the stop disc is rotated so as to disalign the notch with respect to the lug by means responsive to the latter portion of the first mentioned movement of the carriage which occurs after the lug has been admitted by the notch, and in which the disc is indexed into notch aligning position by means operated in response to movements of the carriage in a limited range.

4. A machine for winding wires upon a slotted armature core and comprising a fixed threader having radially disposed threader tubes terminating at their inner ends in shoes arranged in an annular row and adapted respectively to be received by core slots, said tubes receiving wires from supply spools, means for rotatably supporting the armature shaft which is assembled with the core so that the core is in alignment with the threader, a carriage supporting said means, means for moving the carriage longitudinally of the threader in both directions from a loading position to a position within a winding range, means for rotating the shaft in both directions, a lug attached to the carriage, stop discs engageable by said lug to limit the range of movement of the carriage to that required for winding, a rotatable shaft parallel to the direction of carriage movement and to which the discs are connected and along which the discs are adjustable to determine the limited range of carriage movement, one of the discs having a notch providing a gate to receive the lug when the carriage is moved into or away from the range of winding at the threader, means operated in response to movement of the carriage from a loading position into the winding range to cause such rotation of the shaft as to disalign the notch with respect to the lug and operated in response to movements of the carriage in the winding range to cause the shaft to rotate step-by-step until the notch is again aligned with the lug so that the carriage can be moved from the winding range to the loading position.

5. A machine according to claim 4 in which there is a ratchet attached to the shaft, a hub loosely journaled on the shaft, a ratchet pawl supported by the hub, a cam follower supported by the hub, a projection on the hub, a fixed stop pin engageable by the projection, means for urging the hub in the direction to cause the projection to engage the stop pin, and a one-way cam operated by the carriage and engaging the follower for moving the projection away from the stop pin, said pawl moving the ratchet during said movement.

6. A machine according to claim 4 in which there is a ratchet attached to the shaft, a hub loosely journaled on the shaft, a ratchet pawl supported by the hub, a cam follower supported by the hub, a projection on the hub, a fixed stop pin engageable by the projection, means for urging the hub in the direction to cause the projection to engage the stop pin, a one-way cam operated by the carriage and engaging the follower for moving the projection away from the stop pin, said pawl moving the ratchet during said movement, and means for angularly adjusting the stop pin to determine the position of the follower from which the cam moves it thereby determining the extent of angular movement imparted to the shaft due to movement of the carriage in one direction.

7. A machine according to claim 4 in which the shaft has axial movement in a limited range, said movement being effected by engagement of the lug with the discs, in which the carriage is moved by a fluid pressure operated means, in which there is a valve controlling the means, said valve having an actuator movable in either direction from a neutral position to cause operation of the means, and which includes means operated by axial movement of the shaft to cause the valve actuator to move to neutral position from either one of its positions causing operation of the means.

8. A machine for winding wires upon a slotted armature core and comprising a fixed threader having radially disposed threader tubes terminating at their inner ends in shoes arranged in an annular row and adapted respectively to be received by core slots, said tubes receiving wires from supply spools, said threader having two rotatable rings supported coaxially with the row of threader shoes, said rings being located one on each side of the threader tubes, winding compacting shoes supported in an annular row by said rings and arranged for alignment with the threader shoes so that the core slots may respectively receive them, friction devices engaging the rings to prevent accidental misalignment of the compacting shoes with the threader shoes when said compacting shoes are not received by core slots, means for passing the core longitudinally through the threader shoes until a core end clears the threader shoes, and means for rotating the core in one direction of rotation following a pass of the core through the threader shoes in one longitudinal direction and for rotating the core in the opposite direction of rotation following a pass of the core through the threader shoes in the opposite longitudinal direction.

9. A machine for winding wires upon a slotted armature core and comprising a fixed threader having radially disposed threader tubes terminating at their inner ends in shoes arranged in an annular row and adapted respectively to be received by core slots, said tubes receiving wires from supply spools, a carriage movable parallel to the axis of the row of threader shoes from a core loading station to a plurality of operating positions with respect to said threader shoes, a clamp mounted on the carriage and having a core receiving recess in alignment with the threader shoes, a collet chuck mounted on the carriage in alignment with the axis of the threader shoes, the clamp and chuck being located on opposite sides of the threader and so spaced that when the chuck is located at the armature core loading station, the clamp is located close to the threader, said chuck comprising an outer member provided by a rotatable tubular shaft and an

inner member provided by a rod within the shaft and having resilient fingers between which an armature shaft is received, said fingers and chuck shaft having engageable conical surfaces whereby the fingers are caused to grip the shaft in response to axial movement of the rod relative to the chuck shaft, means for moving the carriage to carry the supported core through the threader shoes and back and forth through the threader shoes and means for rotating the collet shaft and core between passes of the core through the threader shoes in order to wind coils into core slots, the winding process continuing until the required number of turns have been wound and ending with the core located beyond the ends of the threader shoes and on the clamp side thereof, means provided by the threader for supporting the core in the last position independently of the chuck, means for moving the chuck rod in a direction to cause the chuck to grip the armature shaft prior to the first movement of the supported core through the threader shoes, means for moving the chuck rod in a direction to cause the chuck to release the armature shaft by the time the winding operations by the machine are completed and the core has been located in said last position on the clamp side of the threader shoes whereby operation of the carriage moving means to return the chuck to loading position permits the core to remain in said location and effects movement of the clamp into the position in which it receives the core and means for causing the clamp to grip the core whereby the core retained by the clamp serves to anchor the start leads of the coils to be wound upon the next succeeding core.

10. A machine for winding wires upon a slotted armature core and comprising a fixed threader having radially disposed threader tubes terminating at their inner ends in shoes arranged in an annular row and adapted respectively to be received by core slots, said tubes receiving wires from supply spools, means for rotatably supporting the armature shaft which is assembled with the core so that the core is in alignment with the threader, a carriage supporting said means, means for moving the carriage longitudinally of the threader in both directions, means for rotating the shaft in both directions, a collet chuck mounted on the carriage in alignment with the axis of the threader shoes and comprising a rotatable, tubular shaft and a rod within the shaft and having resilient fingers between which an armature shaft is received, said fingers and shaft having engageable conical surfaces whereby the fingers are caused to grip the shaft in response to axial movement of the rod relative to the shaft, means for moving the carriage to carry the supported core through the threader shoes and back and forth through the threader shoes and means for rotating the collet shaft and core between passes of the core through the threader shoes in order to wind coils into core slots, the winding process continuing until the required number of turns have been wound and ending with the core located beyond the ends of the threader shoes and on the side thereof remote from the chuck, means provided by the threader for supporting the core in the last position independently of the chuck, means operating in response to movement of the carriage to carry the core from the loading station to the threader to cause the chuck to grip the armature shaft and means rendered operative in consequence of a certain number of rotations of the core for causing movement of the chuck rod in the direction to cause the chuck to release the armature shaft by the time the core is moved into said last position at the end of the winding operation by the machine.

11. A machine for winding wires upon a slotted armature core and comprising a fixed threader having radially disposed threader tubes terminating at their inner ends in shoes arranged in an annular row and adapted respectively to be received by core slots, said tubes receiving wires from supply spools, means for rotatably supporting the armature shaft which is assembled with the core so that the core is in alignment with the threader, a carriage supporting said means, means for moving the carriage longitudinally of the threader in both directions from a core loading station to a plurality of operating positions with respect to said threader shoes, means for rotating the shaft in both directions, a collet chuck mounted on the carriage in alignment with the axis of the threader shoes and comprising a rotatable, tubular shaft and a rod within the shaft and having resilient fingers between which an armature shaft is received, said fingers and shaft having engageable conical surfaces whereby the fingers are caused to grip the shaft in response to axial movement of the rod relative to the shaft, means for moving the carriage to carry the supported core through the threader shoes and back and forth through the threader shoes, means for rotating the collet shaft and core between passes of the core through the threader shoes in order to wind coils into core slots, the winding process continuing until the required number of turns have been wound and ending with the core located beyond the ends of the threader shoes and on the side thereof remote from the chuck, means provided by the threader for supporting the core in the last position independently of the chuck, a pivot pin supported by the chuck rod transversely of the chuck axis, a lever supported by the pin and having first and second arms extending oppositely from the pin, means provided by the lever and chuck shaft to cause, when the first lever arm is moved away from the chuck shaft, the lever to fulcrum about a point spaced from the pin axis on the side opposite to that from which said arm extends whereby the chuck rod moves in a direction to cause the chuck to grip the armature shaft, means provided by the lever and chuck shaft to cause, when the second lever arm is moved away from the chuck shaft, the lever to fulcrum about a point spaced from the pin axis on the side thereof which is the same as that from which the second arm extends, means for moving the first lever arm away from the chuck shaft during movement of the carriage to carry the core from the loading station to the threader, and means rendered operative in consequence of a certain number of rotations of the core for causing movement of the second lever arm away from the chuck shaft to cause the chuck to release the armature shaft by the time the core is moved into said last position at the end of the winding operation.

12. A machine according to claim 11 in which the means for moving the first lever arm away from the chuck shaft comprises a rod provided at the free end of the first lever arm, a latch lever having a fixed pivot and a hook adapted to engage the rod, spring means for urging the latch lever into engagement with the first lever rod whereby, upon movement of the chuck away from

the latch lever, the hook engages the first lever arm rod to cause rotation of the first lever arm away from the chuck shaft, the contacting surface of the hook with the first lever rod being so obliquely disposed that the line of action of the pressure of said rod upon the hook tends to effect rotation of the latch lever to release the pin, the releasing occurring after the chuck grips the armature shaft and when the force-moment couple tending to retract the latch lever from said rod exceeds the force-moment couple of the spring means tending to maintain engagement of the latch lever with said rod.

13. A machine according to claim 11 in which the means for moving the second lever arm away from the chuck shaft includes an abutment, a fixed member supporting the abutment for movement into or away from the path of movement of the free end portion of said second lever arm, means normally maintaining the abutment out of the path of movement of said end portion of the second lever arm and means movable with the carriage and conditioned for operation in consequence of a certain number of rotations of the chuck to cause the abutment member to move into the path of movement of said end portion of the second lever arm whereby, during the last pass of the core through the threader shoes to complete the winding operations by the machine, the chuck rod is moved in the direction to cause the chuck to release the armature shaft.

14. A machine according to claim 11 in which the means for moving the second lever arm away from the chuck shaft comprises an abutment rod attached to and extending at right angles to a shaft journaled on a fixed support for rotation on an axis transverse to the chuck axis, means urging the shaft in a direction to move the abutment rod away from the path of movement of said second lever arm, a lug extending from the shaft, a second abutment rod extending parallel to the chuck axis, a disc supporting the second abutment rod and movable with the carriage and journaled for rotation on an axis parallel to the chuck axis, and means for indexing the disc operated by the chuck rotating means to cause the second abutment rod to become located for engagement with said lug after a predetermined number of rotations of the chuck.

15. A machine according to claim 11 in which the means for moving the second lever arm away from the chuck shaft comprises an abutment rod attached to and extending at right angles to a shaft journaled on a fixed support for rotation on an axis transverse to the chuck axis, means urging the shaft in a direction to move the abutment rod away from the path of movement of said second lever arm, a lug extending from the shaft, a second abutment rod extending parallel to the chuck axis, a ratchet supporting the second abutment rod and movable with the carriage, a ratchet rod movable with the carriage and supporting the ratchet for rotation on an axis parallel to the chuck axis, abutment members provided respectively by the ratchet and ratchet rod, a spring urging the member of the ratchet into engagement with the member of the ratchet rod whereby the starting angular position of the ratchet is established, a ratchet operating pawl operated by the chuck rotating means for causing the ratchet to rotate a certain angular distance in opposition to said spring last mentioned, a ratchet retainer pawl, said ratchet being turned after a certain number of rotations of the chuck to cause the second abutment rod to be brought into alignment with said lug whereby, during the last pass of the core through the threader shoes just before the winding operations of the machine are completed, the second abutment rod strikes the lug, the first abutment rod is turned by the shaft carrying the lug into alignment with said second lever arm of the chuck rod supported lever, and said second lever arm is moved away from the chuck shaft, and means for retracting the ratchet retaining pawl in response to return movement of the chuck to the loading station whereby the abutment member of the ratchet is spring returned into engagement with the ratchet rod abutment member.

16. A machine for winding wires upon a slotted armature core and comprising a fixed threader having radially disposed threader tubes terminating at their inner ends in shoes arranged in an annular row and adapted respectively to be received by core slots, said tubes receiving wires from supply spools, means for rotatably supporting the armature shaft which is assembled with the core so that the core is in alignment with the threader, a carriage supporting said means, means for moving the carriage longitudinally of the threader in both directions from a core loading station to a plurality of operating positions with respect to said threader shoes, means for rotating the shaft in both directions, said core having a non-conducting lamination on the end thereof facing the armature shaft supporting means, a pressure device carried by said shaft supporting means and located adjacent to said non-conducting lamination, a spring urging the device into contact with said lamination, a latch pivoted on said supporting means and engaging a recess of the device to hold it in non-functioning position, a second spring urging the latch into said recess, means for retracting the latch when the carriage moves the core from loading position to the threader whereby the spring presses the device against the said lamination, and means provided by the device for engagement by the threader to retract the device from said lamination after the core has pressed the threader shoes and to cause the latch to be received by the recess of the device, said device and latch having engaging surfaces so arranged as to cause the latch to be cammed into position to snap into said recess when the device is fully retracted.

17. A machine for simultaneously winding armature coils on a slotted armature core and comprising a fixed threader having radially disposed tubes, the inner ends of which provide shoes in an annular row and adapted to be received respectively by core slots, said tubes receiving wires from supply spools, a carriage movable longitudinally of the threader from a core loading station to a plurality of operating positions with respect to said threader shoes, means rotatably supported by the carriage for supporting the core in alignment with the threader and located for movement on one side of the threader, means for moving the carriage to cause the core to move from a loading station to the threader and to make passes through the threader shoes, means for rotating the core supporting means between passes of the core through the threader shoes, means for connecting the core with said core supporting means so that said means may impart rotation to the core, means provided by the threader for supporting the core when disconnected from its rotatable core supporting means in order that, after completion of the

winding operations by the machine, said rotatable core supporting means can be returned by the carriage to loading position, and a core holder supported by the carriage for movement to the threader to receive the wound core supported thereby as the rotatable core support returns to loading position, said core holder having means for securing the wound core thereto, in consequence of which the wound core on the holder serves to anchor the wires which pass through the threader tubes, and the coils of a previously wound core on the core holder are connected by wires with the coils on the next wound core, said rotatable core support and core holder being so spaced upon the carriage that the length of these wires is sufficient for coil end leads of the previously wound core and the coil start leads of the next wound core.

EDWARD W. COLLINS.

REFERENCES CITED

The following references are of record in the file of this patent:

UNITED STATES PATENTS

Number	Name	Date
2,381,750	Hunsdorf	Aug. 7, 1945

OTHER REFERENCES

"Automatic Armature Winding in Less Than One Minute"—Electrical Manufacturing June, 1947, vol. 39, number 6 Pages 111–114, 196—Gage Publishing Co.