TUBE-FIRING GAS BURNER ASSEMBLY

Filed Nov. 29, 1963 4 Sheets-Sheet 1

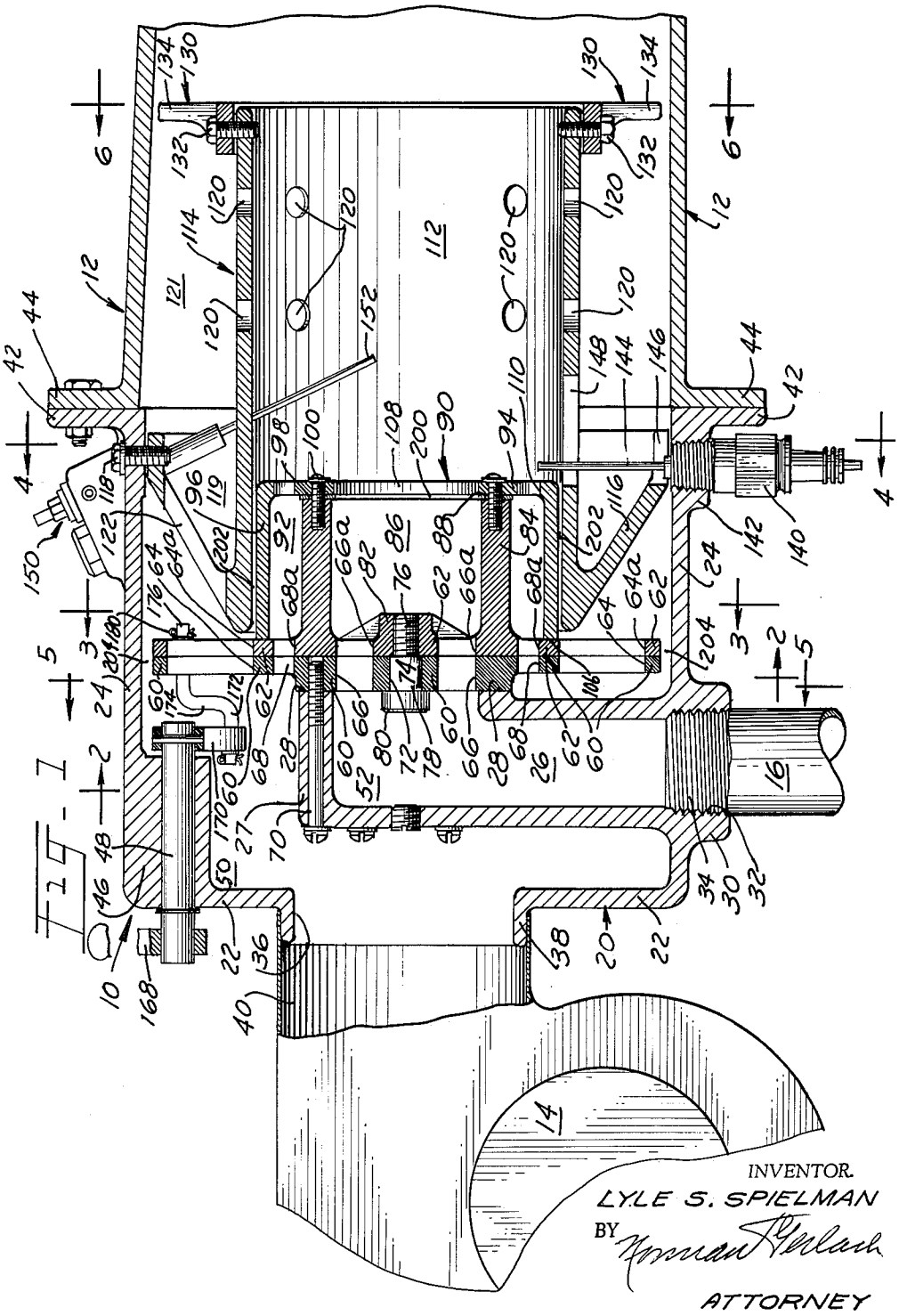

FIG. 1

INVENTOR.
LYLE S. SPIELMAN
BY Norman Perlach
ATTORNEY

TUBE-FIRING GAS BURNER ASSEMBLY

Filed Nov. 29, 1963 4 Sheets-Sheet 2

Fig. 2

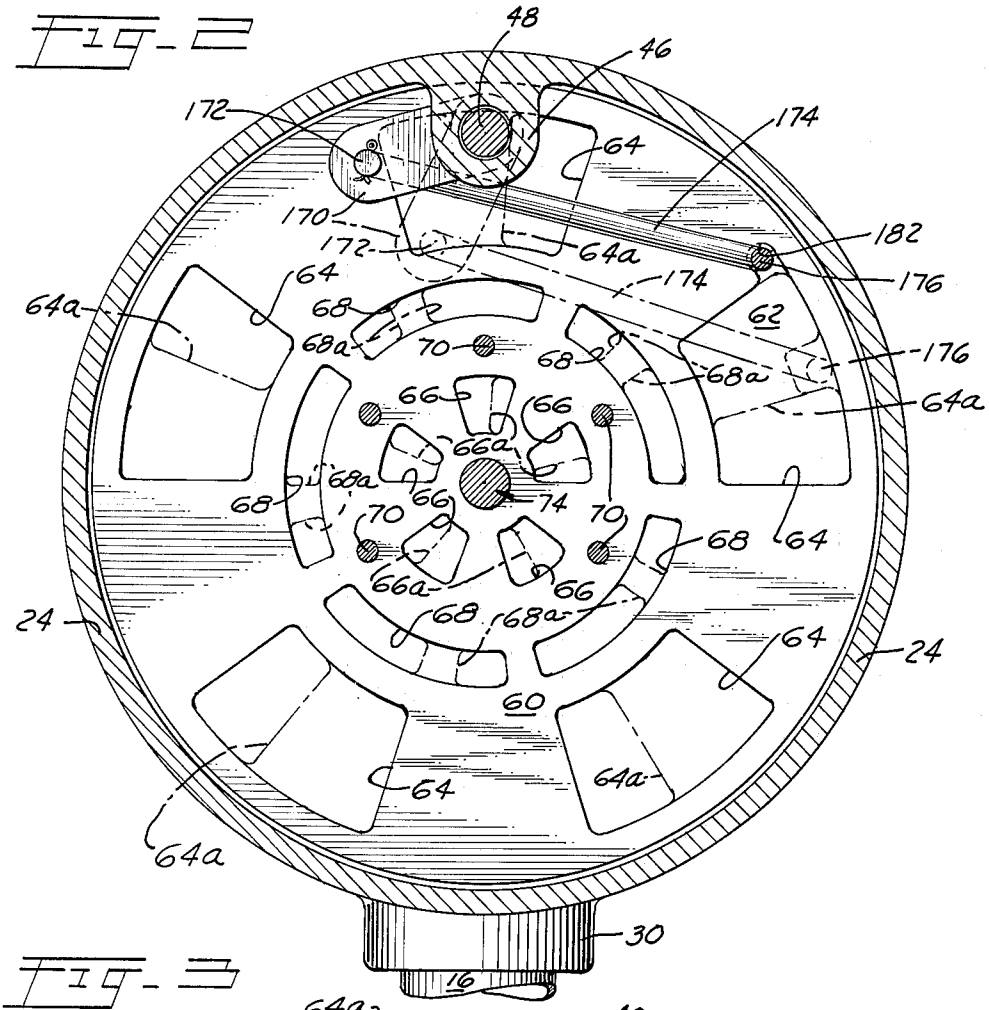

Fig. 3

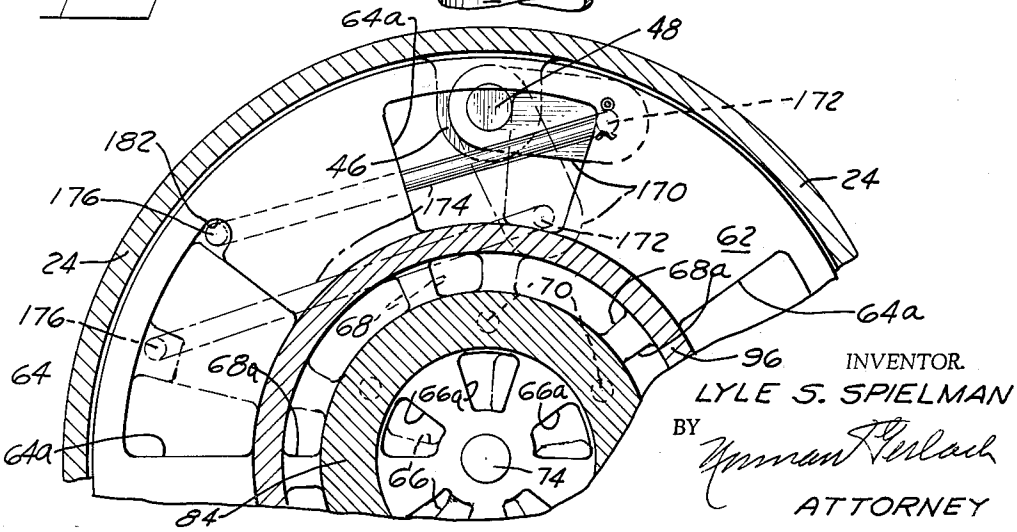

INVENTOR.
LYLE S. SPIELMAN
BY
ATTORNEY

TUBE-FIRING GAS BURNER ASSEMBLY

Filed Nov. 29, 1963 4 Sheets-Sheet 3

Fig. 4

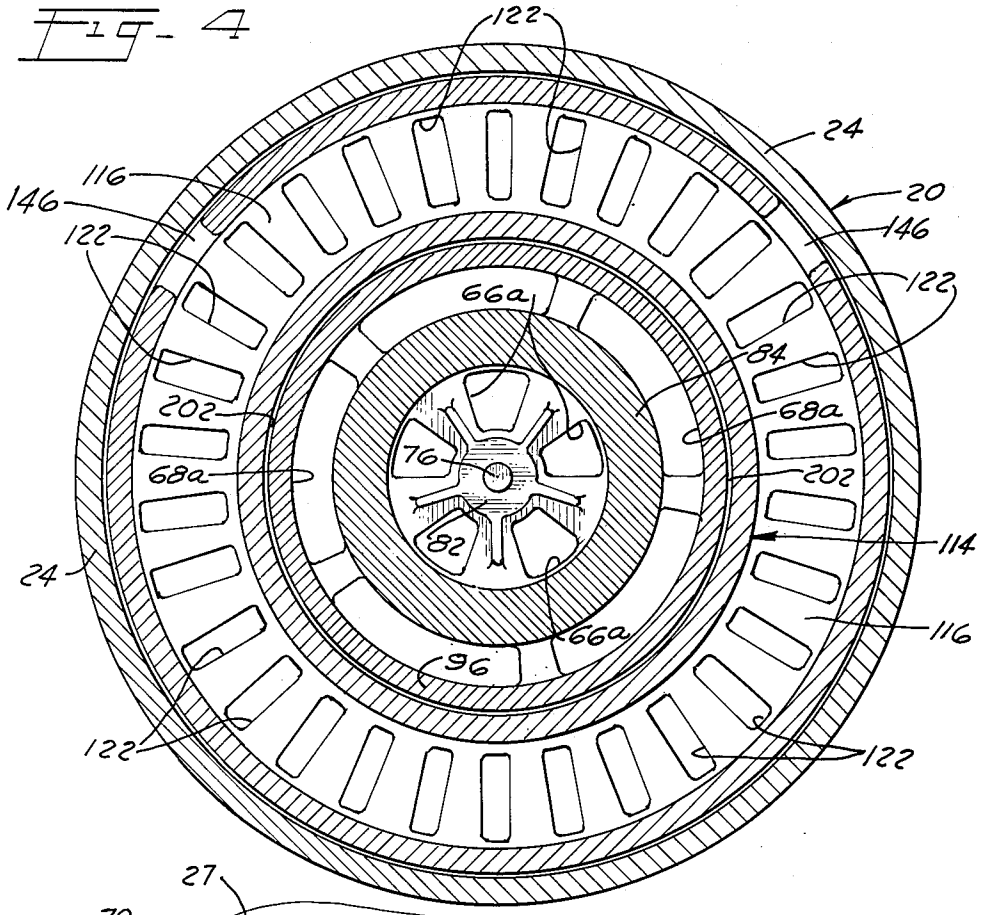

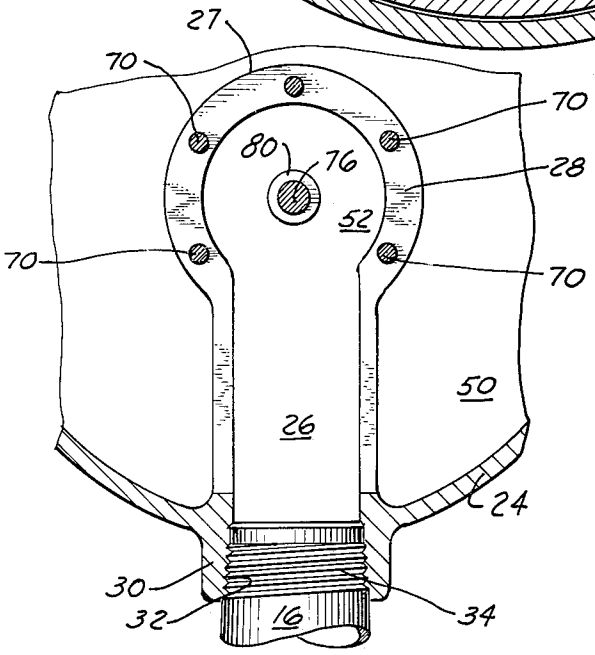

Fig. 5

INVENTOR.
LYLE S. SPIELMAN
BY Norman F. Oblon
ATTORNEY

TUBE-FIRING GAS BURNER ASSEMBLY

Filed Nov. 29, 1963 4 Sheets-Sheet 4

Fig. 6

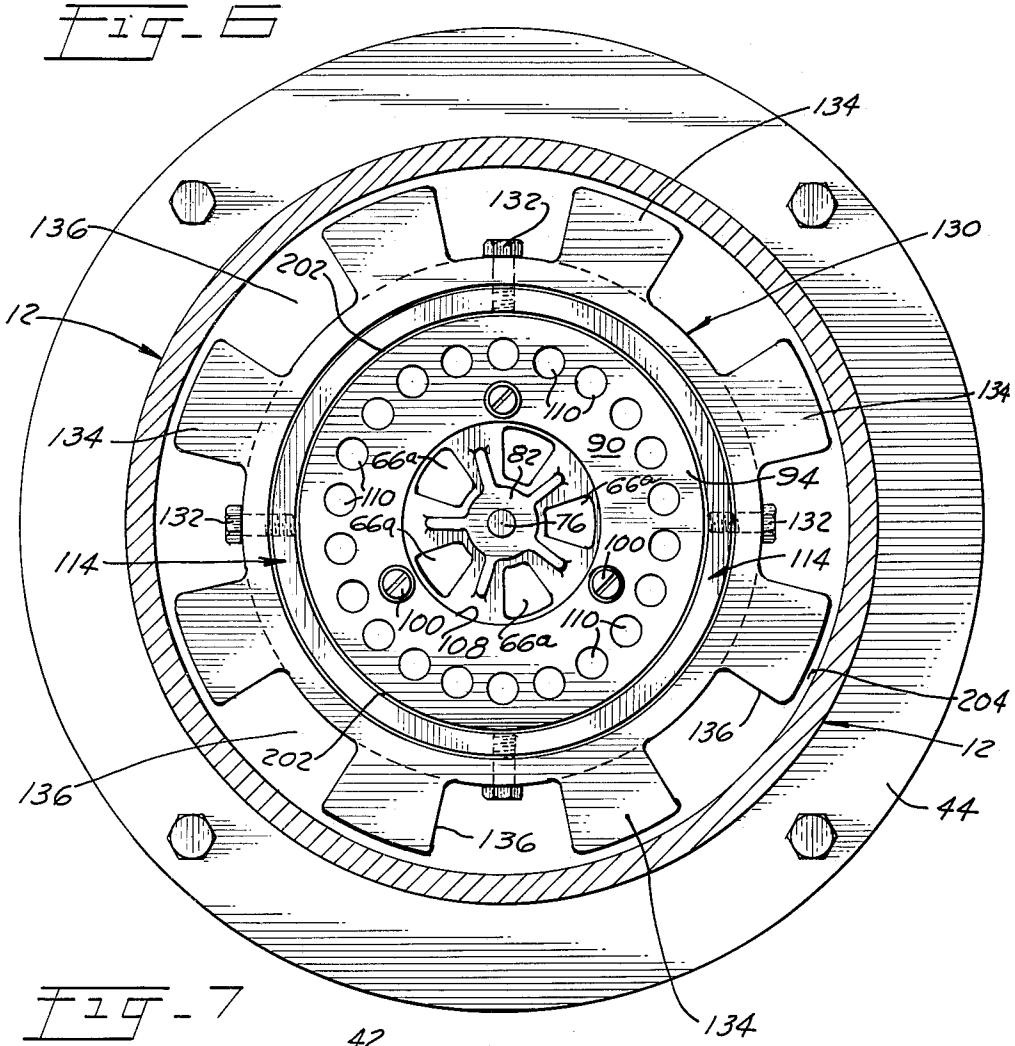

Fig. 7

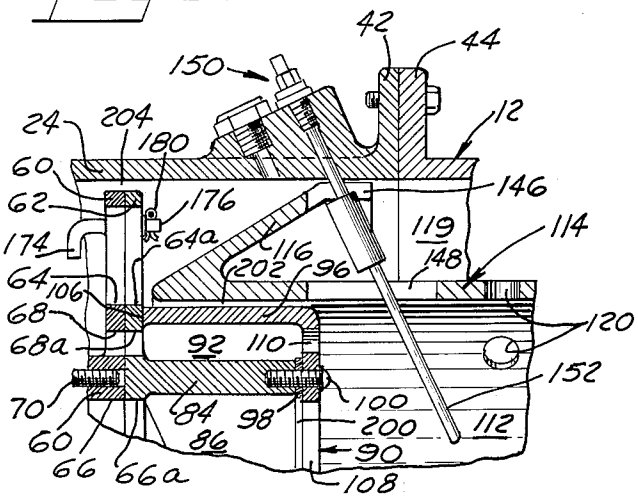

INVENTOR.
LYLE S. SPIELMAN
BY Norman Hecklach
ATTORNEY

United States Patent Office

3,229,748

Patented Jan. 18, 1966

1

3,229,748
TUBE-FIRING GAS BURNER ASSEMBLY

Lyle S. Spielman, Rockford, Ill., assignor to Eclipse Fuel Engineering Co., Rockford, Ill., a corporation of Illinois

Filed Nov. 29, 1963, Ser. No. 327,149
22 Claims. (Cl. 158—109)

The improved burner assembly comprising the present invention has been designed for use primarily as a submersion burner in connection with the internal firing of long single-pass or multiple-pass immersion tubes which are submerged in or enveloped by a body of liquid to be heated. Typical applications of the present burner assembly include such installations as cleaning and degreasing tanks, quenching and tempering tanks, asphalt tanks, spray washing equipment, salt baths and a large variety of other industrial immersion heating apparatuses too numerous to mention. The invention is, however, capable of other uses and the improved burner assembly of the present invention may, if desired and with or without modification as required, be employed in connection with heating installations other than immersion-type installations. For example, a burner assembly embodying the novel features of the present invention may be employed for firing into a combustion block that is associated with a boiler or furnace capable of use in connection with space heating or a steam generating plant. Irrespective, however, of the particular use to which the present invention may be put, the essential features of the invention are at all times preserved.

It is among the principal objects of the present invention to provide a nozzle mixing burner assembly having associated therewith novel proportioning control means whereby the air-gas ratio remains substantially constant during the entire turn-down range of the assembly, this despite fluctuations in back pressure which may be encountered in a tube undergoing firing. In most burner assemblies that are designed for the same purpose as the burner assembly of the present invention, fluctuations in back pressure which may be encountered in the tube undergoing firing affect the flow of gas and air through the burner passages unequally, thus changing the air-gas ratio, causing erratic burner operation, and preventing stoichiometric conditions from being obtained in either the combuston chamber that is associated with the burner assembly or in the tube undergoing firing. Changes in pressure of either the air supply or the gas supply have a similar affect upon burner operation. In connection with conventional burner assemblies, turn-down operations frequently result in a marked change in the air-gas ratio, this change often leading to soot accumulation, noisy operation and other undesirable phenomena. The present invention is designed to overcome the aforementioned limitations that are attendant upon the construction and use of conventional tube-firing burner assemblies and, toward this end, the invention contemplates the provision of a proportioning burner assembly having associated therewith a pair of cooperating air and gas proportioning plates which function in the manner of shutter plates and are provided with cooperating shutter openings, certain of which control the flow of air therethrough and others of which control the flow of gas therethrough, the various openings being so designed that, during turn-down operations, the ratio of flow of air to the flow of gas through such openings remains constant between maximum high fire and minimum low fire conditions of burner operation.

The provision of a burner assembly having cooperating proportioning plates of the character briefly outlined above being among the principal objects of the invention, it is a similar and related object to provide, additionally, cooperating excess air openings in the two plates, these latter

2

openings serving to supply air at all times to a secondary air chamber from which the excess air is discharged into a peripheral region of the associated combustion chamber with the burner for maintenance of a pilot flame in such region, this pilot flame being effective at all turn-down ratios.

Another and important object of the invention is to provide in a burner assembly of the character under consideration, a novel means for effecting turbulence of the gaseous constituents of combustion at the entrance to the combustion chamber, such turbulence existing under both high and low fire conditions and serving, among other things, to carry the fuel gas constituent into the peripheral regions of the combustion chamber where it may become thoroughly admixed with the air entering the combustion chamber instead of short circuiting axially through the central region of the combustion chamber. The danger of such short circuiting of fuel gas centrally through a combustion chamber is prevalent in many types of burner assemblies for the same purpose as the present burner assembly, particularly under conditions of low fire and the present invention is effective to prevent such short circuiting even under minimum fire conditions when only a trickle or small amount of fuel gas is being supplied to the combustion chamber through the various burner ports and passages. In carrying out this last mentioned object of the invention, means are provided whereby all of the fuel gas which is supplied to the burner assembly and is conducted to the combustion chamber by way of a secondary gas chamber in associated relation with the burner nozzle, is caused to penetrate a thin curtain of air which is projected into its path from a secondary air chamber. Before the fuel gas may enter the combustion chamber, it is caused to penetrate this curtain of air and, in so doing, it is broken up, combined with air, and forcibly projected into the combustion chamber intimately mixed with the air so that it is carried into the peripheral regions of the combustion chamber, as well as into the central regions thereof, thus establishing a wide area of thoroughly admixed fuel gas and air for initial combustion purposes.

Still another object of the invention is to provide a burner assembly in which the initially admixed and distributed fuel gas and air resulting from such a curtain of air is subsequently supplied with additional air at a point downstream in the combustion chamber, thus establishing a combustion chamber region where further and more complete combustion takes place resulting in stoichiometric conditions at this point or region of the combustion chamber.

The provision of a burner assembly which is designed especially for tube-firing purposes and may be manufactured as a completely packaged unit that need be only bolted to a tube which is to be fired and connected to a gas line before the burner is ready for operation; one which lends itself to full automatic operation; one which is comprised of a minimum number of parts, particularly moving parts, so that the same is unlikely to get out of order; one which is rugged and durable and, therefore, will withstand rough usage; one which is capable of high fuel inputs; one which affords intimate flame contact with the wall of the tube undergoing firing so that high heat transfer is attained; one which affords even heat distribution along the tube undergoing firing; one which has a relatively low noise level at all turn-down ratios; one which is capable of ease of dismantlement for purposes of inspection of parts and replacement or repair thereof; and one which, otherwise, is well adapted to perform the services required of it, are further desirable features which have been borne in mind in the production and development of the present invention.

Numerous other objects and advantages of the inven-

tion, not at this time enumerated, will become more readily apparent as the following description ensues.

In the accompanying four sheets of drawings forming a part of this specification, one illustrative embodiment of the invention has been shown.

In these drawings:

FIG. 1 is a sectional view taken substantially vertically and centrally through a horizontally disposed burner assembly embodying the principles of the present invention, and showing the same operatively applied in a tube heating installation;

FIG. 2 is a sectional view taken on the line 2—2 of FIG. 1 and in the direction indicated by the arrows;

FIG. 3 is a sectional view taken on the line 3—3 of FIG. 1;

FIG. 4 is a sectional view taken on the line 4—4 of FIG. 1;

FIG. 5 is an enlarged fragmentary sectional view taken on the line 5—5 of FIG. 1;

FIG. 6 is a sectional view taken on the line 6—6 of FIG. 1; and

FIG. 7 is an enlarged detail sectional view of a limited portion of the structure shown in FIG. 1.

Referring now to the drawings in detail and in particular to FIG. 1, a burner assembly embodying the present invention has been designated in its entirety by the reference numeral **10** and is shown as being operatively connected to a submersion tube **12**, the interior of which is required to be fired, and to a blower **14** which supplies combustion air, as well as to a source of fuel gas through a suitable conduit or gas line **16**. The burner assembly is designed primarily, but not necessarily, for the purpose of firing a long single immersion tube such as the tube **12**, the latter being associated with and forming a part of such typical applications as a cleaning tank, a quenching and tempering tank, a spray washer, a salt bath or other industrial immersion heating installation where a large body of liquid to be heated is involved. The blower **14** furnishes low pressure combustion air to the burner assembly **10**, while the line **16** furnishes raw fuel gas or a mixture of fuel gas and air, as required, the particular gaseous constituent that is furnished by this line being referred to herein simply as fuel gas.

Briefly, the burner assembly **10** includes a main body casting **20** which provides a mounting for certain internal and external components, the internal components consisting mainly of gas and air mixing and proportioning instrumentalities, together with linkage mechanism for actuating these instrumentalities. The body casting **20** is provided with means whereby the burner assembly as a whole may be mounted in a given installation with the blower **14** directly supported or mounted on the body casting, the burner assembly being operatively applied or attached to the particular tube **12** which is to be fired. Said body casting **20** also functions as a manifold for combustion air as will become more readily apparent when the nature of the invention is better understood.

Considering the main body casting **20** in greater detail, this casting is preferably formed of cast iron and is generally of cylindrical cup-shaped design. The casting includes a circular, vertically extending rear wall **22**, a substantially cylindrical, horizontally extending outer wall **24**, and an internal, radially extending throat **26**, the upper or inner end of which is turned forwardly to provide a semi-cylindrical wall **27** having a forwardly facing circular rim **28**. The lower end of the throat **26** communicates with a boss **30** which is internally threaded as at **32** for reception of the threaded end **34** of the gas supply line **16**. The rear wall **22** of the body casting is formed with a central opening **36** having a marginal attachment flange **38** by means of which the body casting may be operatively connected to the outlet side **40** of the blower **14** in blower-supporting relationship. The forward rim of the cylindrical outer wall **24** terminates in an annular attachment or bolting flange **42** which is designed for attachment to a similar mating flange **44** on the adjacent end of the tube **12** undergoing firing. A thickened region **46** at the juncture between the cylindrical wall **24** and the rear wall **22** at the top of the body casting **20** affords a reinforced support for a horizontally extending operating shaft **48**, the nature and function of which will be made clear presently. The internal throat **26** divides the interior of the body casting **20** into a main air chamber **50** and a gas chamber **52** (see FIG. 5). Both chambers opening in a forward direction, the former chamber presenting an annular opening and the latter chamber presenting a circular opening within the annular opening.

Still referring to FIG. 1, the burner assembly **10** further includes a fixed rear proportioning plate **60** and a movable front proportioning plate **62**. The rear proportioning plate **60** is substantially flat and is of circular design. As shown in FIG. 2, this plate **60** is provided with a series of five equally and circumferentially spaced shutter openings **64**, these openings being in the form of arcuate slots of appreciable arcuate extent and radial height and being disposed adjacent to the periphery of the plate **60**. In the central regions of the plate **60** there is provided a series of five shutter openings **66**, similarly of arcuate design and circumferentially spaced and of considerably less arcuate extent and radial height. In the intermediate or central region of the plate **60**, there is provided a series of five additional shutter openings **68** of large arcuate extent and of small radial height. Corresponding openings **64**, **66** and **68** of the three series of openings are arranged in groups of three radially aligned openings. The leading edges of the openings of each group, considered in a clockwise direction as viewed in FIG. 2, are disposed in true radial alignment. The trailing edges of the openings **64** and **66** of each group are likewise in true radial alignment. The trailing edges of the openings **68** of each group are circumferentially displaced in a counterclockwise direction from the trailing edges of the corresponding openings **64** and **66**. Stated otherwise, the arcuate spans of the openings **64** and **66**, when measured in degrees, are equal, the openings spanning the same circle sector. The arcuate spans of the openings **68** are greater than the arcuate spans of the openings **64** and **66**, when these spans are measured in degrees.

The fixed rear proportioning plate **60** is secured to the forwardly facing semi-circular rim **28** of the throat **26** by means of elongated, horizontally extending clamping bolts **70** which project completely through the semi-cylindrical wall **27** of the gas chamber **52** (see FIG. 5) and have their forward ends threadedly received in the rear proportioning plate **60**. Said fixed rear proportioning plate **60** is provided with a central bore **72** therethrough. The wall of the bore **72** constitutes a bearing surface for a pivot bolt **74**, such bolt having a reduced threaded shank **76**, a cylindrical section **78**, and an enlarged head **80**. The reduced shank **76** of the bolt **74** is threadedly received in a hub **82** on the movable front proportioning plate **62**. The cylindrical section **78** of the bolt **74** is rotatable in the bore **72**. The enlarged head **80** of said bolt **74** overlies the rim of the bore **72** and maintains the front proportioning plate **62** in sliding contact with the fixed rear plate **60**.

The movable front proportioning plate **62** is capable of limited oscillating movements with respect to the fixed rear proportioning plate **60** and about the horizontal axis of the pivot bolt **74**. Said plate **62** is formed with three series of five openings each and such openings correspond in size, shape and positioning to the size, shape and positioning of the three series of openings **64**, **66** and **68** in the fixed rear plate **60**. For convenience of description, the corresponding openings in the two plates have been similarly designated, the openings in the plate **62** bearing the suffix "*a*." Corresponding openings in the two plates

60 and 62 are designed for register with each other, the fixed rear proportioning plate 60 constituting a fixed shutter plate and the movable front proportioning plate 62 constituting a cooperating movable shutter plate. Means, subsequently to be described, are provided for regulably adjusting the angular position of the movable front proportioning plate 62 with respect to the fixed rear proportioning plate 60 in order to vary the effective size of the cooperating openings in the two plates.

The openings 64 and 64*a* lie outside the peripheral confines of the cylindrical wall 27 and thus are in register with the air chamber 50 so that they constitute air openings. The openings 68 and 68*a* also are in register with the air chamber 50 and constitute air openings. The openings 66 and 66*a* lie within the cylindrical confines of the wall 27 and thus are in register with the gas chamber 52 so that they constitute gas openings.

Projecting forwardly from the front movable proportioning plate 62 at a circular region substantially midway between the central axis of the plate and the latter's periphery is an imperforate cylindrical wall 84 which, in combination with the innermost slotted region of the plate 62, provides a relatively deep cup-shaped secondary gas chamber 86. The latter communicates with the primary or main gas chamber 52 through the medium of the registering openings 66 and 66*a*.

Secured to the forward rim 88 of the cylindrical wall 84 is a cup-shaped nozzle member 90 which is telescopically received over the cylindrical wall 84 and, in combination therewith, establishes an annular inner secondary air chamber 92 around the secondary gas chamber 86. The nozzle member 90 is provided with a flat radial wall 94 and, in addition, a cylindrical wall 96 which is concentric with but slightly spaced from the rim 88 of the cylindrical wall 84. The spacing of the flat radial wall from the rim 88 is effected by the difference in axial extent between the two walls 84 and 96, the former wall being slightly shorter in an axial direction than the latter wall. Additionally, spacer washers 98 are disposed between the wall 94 and the rim 88 and surround the clamping bolts 100 which extend through the wall 94 and are threadedly received in the forward circular rim 88 of the cylindrical wall 84. The rear open circular rim 106 of the nozzle member 90 seats on the movable front proportioning plate 62. The nozzle member and the front proportioning plate are thus rotatably bodily as a unit about the axis of the pivot bolt 74.

The circular wall 94 of the nozzle member 90 is formed with an enlarged central opening 108 which is in registry with the secondary gas chamber 86, and also with a circular row of relatively small spaced openings 110, such openings being in registry with the secondary air chamber 92. The enlarged opening 108 constitutes a gas port which opens into a cylindrical combustion chamber 112 in a tubular combustion shell 114, the rear end region of which surrounds the cylindrical wall 96 of the nozzle member 90 and is slightly spaced therefrom. The rear end of the combustion shell 114 is formed with a slotted, forwardly extending, frusto-conical flange 116 (hereinafter referred to as the diffuser cone) therein. The peripheral region of the diffuser cone is fixedly secured to the inside face of the cylindrical wall 24 of the main body casting 20 by means of fastening screws 118. The circular row of openings 110 open into the combustion chamber 112 in the peripheral region of the latter. The diffuser cone 116, in combination with the peripheral region of the movable proportioning plate 62 and the wall 24 of the casting 20 establishes an annular outer secondary air chamber 119 around a portion of the annular inner secondary air chamber 92.

The tubular combustion shell 114 is provided with a series of radial orifices 120 while the diffuser cone 116 is provided with a multiplicity of closely spaced slots 122 (see FIG. 4), such slots extending in the direction of slant of the diffuser cone and being of slightly less length than the slant length of the cone.

A retention nozzle 130 in the form of a ring is secured by fastening screws 132 to the forward rim region of the cylindrical wall of the combustion shell 114 and is provided with a series of radial fingers 134 (see FIG. 6), adjacent fingers establishing therebetween a series of slots 136 through which air from the annular space 121 that exists between the retention shell 114 and the wall of tube 12 may pass forwardly for admixture with the products of combustion leaving the combustion chamber 112. This annular space 121 constitutes, in effect, a forward extension of the outer secondary air chamber 119 and extends around, but is spaced from, the combustion chamber 112.

For ignition purposes, a spark plug 140 is threadedly received in a thickened wall portion 142 which is a part of the main body casting 20 and is located adjacent to the bolting flange 42. The electrode 144 of the spark plug pass radially inwardly through slots 146 and 148 in the peripheral region of the diffuser cone 116 and in the combustion shell 114, respectively, the spark gap of the electrode 144 being disposed immediately forwardly of one of the openings 110 in the wall 94 of the nozzle member 90. A conventional flame rod assembly 150 is similarly mounted on the main body casting 20 in diametrically opposed relationship to the spark plug 140 and has its flame rod proper 152 similarly disposed with respect to one of the openings 110.

The previously mentioned means for effecting angular turning movements of the movable front proportioning plate 62 comprises the previously mentioned operating shaft 48 which is rotatably mounted in the thickened wall portion 46 in the upper region of the main body casting 20 and at the juncture between the walls 22 and 24 thereof. The outer end of the shaft 48 carries an actuating handle 168 while the inner end of the shaft carries a crank arm 170. The outer end of the crank arm 170 is connected to one laterally turned end 172 of an elongated link 174, and the other end of the link has a laterally turned end 176 which is connected to the movable front proportioning plate 62 at a point adjacent to the periphery thereof. Cotter pin and washer assemblies 180 pass through the laterally turned ends 172 and 176 of the link 174 and serve to maintain the pivotal relationship between said laterally turned ends 172 and 176 and the elements to which they are pivotally connected. As best seen in FIGS. 2 and 3, the full angular throw of the movable front proportioning plate 62 is such that it may move between a positioin of full throttle opening wherein the various openings 64 and 66 of the fixed rear proportioning plate 60 are completely uncovered by reason of their registry with the openings 64*a* and 66*a*, respectively, and a position wherein these former openings are completely covered by imperforate portions of the movable front proportional plate 62. Such movement of the front proportioning plate involves an angular displacement of the plate of approximately 35° and, in order that the laterally turned end 172 of the link 170 may have freedom of movement throughout the full angle necessary for such displacement, this end operates in one of the slots 64*a*, such one slot being formed with a clearance notch 182 into which the laterally turned end 176 moves when the openings 64 and 64*a* are fully in register. This position of full registry between the two proportioning plates 60 and 62 is illustrated in full lines in FIGS. 2 and 3 and a position of partial registry between the plates is shown in dotted lines in these views. In one extreme position of the movable front proportioning plate 62, all of the openings 64, 66 and 68 are fully uncovered. However, due to the greater arcuate extent of the slots 68 and 68*a*, in the other extreme position of the movable front proportioning plate 62, when the slots 64 and 66 are completely covered, the slots remain only partially covered as shown in FIG. 2. Thus, at no time is the supply of air

to the secondary air chamber **92** and from this chamber to the combustion chamber **112** through the openings **110** completely shut off.

In the operation of the herein described burner assembly, the blower **14** maintains a substantially constant air pressure at the air inlet opening **36** and in the main air chamber **50**. Similarly, gas that is supplied to the throat **26** maintains a substantially constant gas pressure in the gas chamber **52**. Assuming now that the movable front proportioning plate **62** is in its fully opened position wherein all of the openings **64**, **66** and **68** are in register with their counterpart openings **64***a*, **66***a*, and **68***a*, respectively, and that the burner is in full operation at its maximum firing rate, maximum gas flow through the registering openings **66** and **66***a* and from the gas chamber **52** within the throat **26** to the secondary gas chamber **86** takes place while, at the same time, maximum air flow through the registering openings **68** and **68***a* and from the main air chamber **50** to the secondary air chamber **92** also takes place. The gas, before it passes through the central openings **108** in the vertical wall **94** of the cup-shaped nozzle member **90**, encounters a thin radial curtain or sheet of inwardly flowing air which passes radially inwardly through the annular gap existing between the forward rim **88** and the vertical wall **94**, this gap being designated at **200** in FIG. 1. The function of this thin curtain of air is to create turbulence of the gas which issues through the large central opening **108** and enters the combustion chamber **112** and also to distribute this gas throughout the combustion chamber. The provision of such a thin curtain of air constitutes one of the important features of the present invention inasmuch as without it there would be a tendency for the gas to flow axially from the large central opening **108** and pass through the central axial regions of the combustion chamber without becoming intimately mixed with the air issuing from either the openings **110** or the openings **120**. The existence of this thin curtain of air is, of course, predicated upon the fact that the pressure of air within the air chamber **50** is appreciably higher than the pressure of gas within the gas chamber **52**.

The gas, after it has thus broken through the thin curtain of air issuing radially inwardly from the gap **200**, is then in such a degree of turbulence and is so intermixed with sufficient air from the curtain that small eddy currents thereof are constrained to move into the vicinity of the air openings **110** and, by reason of the spark plug electrode **144**, ignition is initially established in the zone just forwardly of the openings **110**. This initial combustion establishes a ring of flame which also serves as a pilot during low fire conditions as will be described presently.

A small amount of air passes from the main air chamber **50** through the narrow annulus **202** that exists between the combustion shell **114** and the cylindrical wall **96**, and such small amount of air serves substantially the same purpose as the air issuing from the opening **110**.

Further along the combustion chamber **112** remote from the wall **94** of the nozzle member **90**, the partially burned products of combustion mix with air flowing radially inwardly through the openings **120** in the cylindrical wall of the combustion shell **114** and combustion is continued in the exit region of the combustion shell **114** but stoichiometric conditions are not attained in the combustion chamber and a rich mixture leaves the chamber and enters the tube **12**.

Air passing through the registering openings **64** and **64***a* in the peripheral regions of the fixed and movable plates **60** and **62**, respectively, enters the secondary air chamber **119**, passes through the slots **122** in the diffuser cone **116** and, finally, encounters the retention ring **130** so that a back pressure is built up in the annular space between the wall of the tube **12** and the combustion shell **114**, this back pressure being sufficient to force the air inwardly through the openings **120** as previously described.

The remainder of the air within the chamber **119** passes forwardly through the slots **136** existing between the radial fingers **134** on the retention nozzle **130** and mixes with the rich mixture issuing from the combustion chamber **112**. This air establishes further turbulence of the gas and air and spreads the flame in all directions and expands it into intimate heat exchange relationship with the tube walls, while at the same time supplying the additional air necessary to establish stoichiometric conditions within the tube **12** forwardly of the burner assembly.

The firing rate of the burner assembly may be reduced by manipulation of the handle **168** whereupon, by turning the shaft **48** in a clockwise direction as viewed in FIG. 3, the movable front proportioning plate **62** is caused to rotate in such a direction as progressively to close off the three series of registering openings in the two proportioning plates **60** and **62**. Due to the shape of the openings **64** and **66** and, due to the fact that adjacent radially disposed openings span the same circle sector, the simultaneous reduction in size of the openings maintains a constant gas-air ratio. It is to be noted at this point that this constant gas-air ratio prevails regardless of any back pressure which may be created within the tube **12** undergoing firing because such back pressure operates to throttle the gas and air equally.

In order that only moderate changes in gas-air ratio will take place as a result of fluctuations in the gas supply line as, for example, such pressure increases as may arise due to pressure regulator fluctuations, during turn-down operations, an annular space **204** between the peripheries of the proportioning plates **60** and **62** and the wall **24** of the main body casting **20** allows a quantity of air to be bypassed around these plates at all times. This bypassed air is sufficient in volume to compensate for any excess gas which may be forced from the gas chamber **52** when an increase of gas pressure in the chamber takes place for any reason whatsoever.

It will be understood that the relative size of the openings **64** and **66** in the rear fixed proportioning plate **60** may be varied according to engineering expediences to satisfy the requirements of different desired gas-air ratios. For example, if it is desired to maintain a nearly constant air-gas ratio of ten to one which is ideal when natural fuel gas is employed, the area of the openings **64** will be approximately ten times the area of the openings **66** and the air-gas proportion will be maintained fairly constant regardless of the extent of the shutter opening involved at any given setting of the movable front proportioning plate **62**.

As previously stated, the arcuate extent of the openings **68** is greater than the arcuate extent of the openings **64** and **66**. Thus, even when almost complete turn-down conditions obtain so that a minimum amount of gas and air issues from the registering openings **64** and **64***a* and **66** and **66***a*, sufficient air will issue from the registering openings **68** and **68***a* to maintain the desired thin curtain of air through the gap **200**, such curtain of air being penetrated by the gas issuing from the registering openings **66** and **66***a*. This curtain of air is instrumental in maintaining a low noise level at all conditions of burner operation.

It is to be further noted that excess air is available from three locations to preclude the common limitation that is attendant upon conventional proportioning burners when low air pressure is supplied to the burner under high fire conditions, namely, poor mixing of the combustible constitutents and consequent soot formation. The three locations are through the annulus **202** and the annular space **204** and through the registering excess air openings **68** and **68***a* which are at no times completely or even nearly closed off.

The invention is not to be limited to the exact arrangement of parts shown in the accompanying drawings or described in this specification as various changes in the details of construction may be resorted to without depart-

ing from the spirit or scope of the invention. Therefore, only insofar as the invention has been particularly pointed out in the accompanying claims is the same to be limited.

Having thus described the invention what I claim as new and desire to secure by Letters Patent is:

1. In a gas burner assembly, in combination, a main burner casting in the form of a generally cylindrical cup-shaped body having a rear wall, a cylindrical side wall defining a forward open circular rim designed for attachment to the mating circular rim of a tube to be internally fired, and means forming an internal radially extending throat in said casting and terminating in a centrally disposed cylindrical wall forming a main gas chamber, said last named cylindrical wall being spaced from said side wall and defining a forward open circular rim coaxial with and spaced rearwardly from the circular rim of the side wall of the main burner casting, the annular space within said cup-shaped body between said cylindrical walls defining a main annular air chamber surrounding the main gas chamber, a transversely extending fixed rear circular proportioning plate fixedly secured to said main burner casting and extending across the open ends of the main gas and air chambers, a cooperating movable front circular proportioning plate coaxially disposed in face-to-face sliding contact with said fixed proportioning plate and capable of angular turning movement about the common axis of said plates, the forward side of said front proportioning plate being provided with a forwardly extending cylindrical wall defining a circular forward rim, said latter wall in combination with the central region of said front proportioning plate defining a secondary gas chamber forwardly of and coaxial with said main gas chamber, a cup-shaped nozzle member having a front wall disposed adjacent to said latter circular forward rim and a cylindrical side wall defining a rear open rim in seating contact with the forward side of the front proportioning plate and spaced from and surrounding the cylindrical wall which in part defines the secondary gas chamber, said cylindrical wall of the nozzle member and said cylindrical wall which in part defines the secondary gas chamber defining in combination with an annular region of the front proportional plate an annular secondary air chamber forwardly of the main air chamber and surrounding the secondary gas chamber, said proportioning plates being provided with cooperating shutter openings establishing communication between said main and secondary air chambers and with cooperating shutter openings establishing communication between the main and secondary gas chambers, said front wall being provided with openings in communication with the secondary air and gas chambers, respectively, means for moving said movable proportioning plate to vary the effective size of the cooperating shutter openings, means for supplying air under pressure to the interior of said main air chamber, and means for supplying gas under pressure to the interior of said main gas chamber.

2. A gas burner assembly as set forth in claim 1, wherein the opening which is in the front wall of the nozzle member and is in communication with the secondary gas chamber is circular, centrally disposed, and of a diameter substantially equal to the diameter of the cylindrical side wall of the nozzle member, and wherein the openings in the front wall and which are in communication with the secondary air chamber are circular, of appreciably less diameter than the radial distance between the side wall of the nozzle member and the cylindrical wall on the front proportioning plate, and are arranged in a circular row around the peripheral region of the front wall.

3. A gas burner assembly as set forth in claim 2 and wherein the front wall of the nozzle member is slightly spaced from the circular forward rim of the forwardly extending cylindrical wall so as to establish, in combination therewith, a narrow gap through which air may flow radially inwardly across the relatively large opening in said front wall.

4. A gas burner assembly as set forth in claim 2 wherein the front wall of the nozzle member is slightly spaced from the circular forward rim of the forwardly extending cylindrical wall so as to establish, in combination therewith, a narrow gap through which air may flow radially inwardly across the relatively large opening in said front wall and including, additionally, a series of fastening screws projecting through said front wall and threadedly received in said forward rim of the forwardly extending cylindrical wall, said fastening screws serving to draw the nozzle member rearwardly and maintain the rear open rim of the side wall of the nozzle member in seating engagement with the forward side of the front proportioning plate.

5. A gas burner assembly as set forth in claim 4 and including, additionally, a series of spacer washers interposed between said front wall and the adjacent circular rim and surrounding said fastening screws.

6. In a gas burner assembly, in combination, a main burner casting in the form of a generally cylindrical cup-shaped body having a rear wall, a cylindrical side wall defining a forward open cylindrical rim designed for attachment to the mating circular rim of a tube to be internally fired, and means forming an internal radially extending throat in said casting and terminating in a centrally disposed cylindrical wall forming a main gas chamber, said last named cylindrical wall being spaced from said side wall and defining a forward open circular rim coaxial with and spaced rearwardly from the circular rim of the side wall of the main burner casting, the annular space within said cup-shaped body between said cylindrical walls defining a main annular air chamber surrounding the main gas chamber, a transversely extending fixed circular proportioning plate fixedly secured to said main burner casting and extending across the open ends of the main gas and air chambers, a cooperating movable circular proportioning plate coaxially disposed in face-to-face sliding contact with said fixed proportioning plate nad capable of angular turning movement about the common axis of said plates, the forward side of said front proportioning plate being provided with a forwardly extending cylindrical wall defining a circular forward rim and also in combination with the central region of said latter plate defining a secondary gas chamber forwardly of and coaxial with said main gas chamber, a cup-shaped nozzle member having a front wall disposed adjacent to said latter circular forward rim and a cylindrical side wall defining a rear open rim in seating contact with the forward side of the front proportioning plate and spaced from and surrounding the cylindrical wall which in part defines the secondary gas chamber, said cylindrical side wall of the nozzle member and said cylindrical wall which in part defines the secondary gas chamber defining in combination with an annular region of the front proportioning plate an annular inner secondary air chamber forwardly of the main air chamber and surrounding the secondary gas chamber, said front wall being provided with a relatively large central opening in communication with the secondary gas chamber and with a series of relatively small openings in the peripheral regions thereof, arranged in a circular row and in communication with the inner secondary tubular air chamber, a cylindrical combustion shell coaxial with and having its rear open end region surrounding the cylindrical side wall of the nozzle member, said combustion shell projecting forwardly of the nozzle member and, in combination with the front wall of the latter, defining a forwardly opening internal combustion chamber adapted to be projected coaxially into the tube to be internally fired, said combustion shell being of less diameter than the diameter of said proportioning plates and, in combination with the cylindrical side wall of the cup-shaped body which comprises the main burner casting, defining an outer secondary air chamber forwardly of the main air chamber, said combustion shell being provided with a plurality of radial open-

ings therein forwardly of said front wall of the nozzle member for conducting air from said outer secondary air chamber to the combustion chamber within said combustion shell, said proportioning plates being provided with a first series of cooperating air shutter openings establishing communication between said main and inner secondary air chambers, with a second series of cooperating gas shutter openings establishing communication between the main and secondary gas chambers, and with a third series of cooperating air shutter openings establishing communication between the main and outer secondary air chambers, means for moving said movable proportioning plate to vary the effective size of the cooperating shutter openings, means for supplying air under pressure to the interior of said main air chamber, and means for supplying gas under pressure to the interior of said main gas chamber.

7. A gas burner assembly as set forth in claim **6** and wherein the front wall of the nozzle member is slightly spaced from the circular forward rim of the forwardly extending cylindrical wall so as to establish, in combination therewith, a narrow gap through which air may flow radially inwardly across the relatively large opening in said front wall.

8. A gas burner assembly as set forth in claim **6** and wherein the rear open end region of said combustion shell is slightly spaced from the cylindrical side wall which it surrounds and establishes, in combination therewith, a narrow annulus through which air may pass from the outer secondary air chamber to the combustion chamber.

9. In a gas burner assembly, the combination set forth in claim **6** and wherein the individual openings of said first and third series of cooperating shutter openings are in the form of arcuate slots concentric with the respective circular proportioning plates in which they are formed, the radial height and the arcuate extent of said slots being such that upon angular movement of the front movable proportioning plate a substantially constant flow ratio of air and gas through the respective shutter openings obtains.

10. A gas burner assembly as set forth in claim **9** and wherein the individual openings of said second series of cooperating air shutter openings are in the form of arcuate slots concentric with the respective circular proportioning plates in which they are formed, the arcuate extent of said latter shutter openings being such that they remain in partial register in any angular position of the front proportioning plate.

11. In a gas burner assembly, in combination, a main burner casting in the form of a generally cylindrical cup-shaped body having a rear wall, a cylindrical side wall defining a forward open circular rim designed for attachment to the mating circular rim of a tube to be internally fired, and means defining an internal radially extending throat in said casting and terminating in a central disposed cylindrical wall forming a main gas chamber, said last named cylindrical wall being spaced from said side wall and defining a forward open circular rim coaxial with and spaced rearwardly from the circular rim of the side wall of the main burner casting, the annular space within said cup-shaped body between said cylindrical walls defining a main annular air chamber surrounding the main gas chamber, a transversely extending fixed circular proportioning plate fixedly secured to said main burner casting and extending across the open ends of the main gas and air chambers, a cooperating movable circular proportioning plate coaxially disposed in face-to-face sliding contact with said fixed proportioning plate and capable of angular turning movement about the common axis of said plates, the forward side of said front proportioning plate being provided with a forwardly extending cylindrical wall defining a circular forward rim and also in combination with the central region of said latter plate defining a secondary gas chamber forwardly of and coaxial with said main gas chamber, a cup-shaped nozzle member having a front wall disposed adjacent to said latter circular forward rim and a cylindrical side wall defining a rear open rim in seating contact with the forward side of the front proportioning plate and spaced from and surrounding the cylindrical wall which in part defines the secondary gas chamber, said cylindrical side wall of the nozzle member and said cylindrical wall which in part defines the secondary gas chamber, defining in combination with an annular region of the front proportioning plate, an annular inner secondary air chamber forwardly of the main air chamber and surrounding the secondary gas chamber, said front wall being provided with a relatively large central opening in communication with the secondary gas chamber and with a series of relatively small openings in the peripheral regions thereof, arranged in a circular row and in communication with the inner secondary air chamber, a fixed tubular cylindrical combustion shell coaxial with and having its rear open end region surrounding the cylindrical side wall of the nozzle member, said combustion shell projecting forwardly of the nozzle member and in combination with the front wall of the latter defining a forwardly opening internal combustion chamber adapted to be projected coaxially into the tube to be internally fired, said combustion shell having its rear open rim region projecting rearwardly into the cylindrical side wall of the cup-shaped body and, in combination therewith, defining an annular outer secondary air chamber forwardly of the main air chamber and surrounding the inner secondary air chamber, a forwardly extending frusto-conical flange formed on the rear rim of said combustion shell and projecting across said outer secondary air chamber within the axial confines of the cylindrical side wall of the cup-shaped body, said frusto-conical flange having openings therein for restricting the flow of air forwardly through the outer secondary air chamber, said combustion shell being provided with a plurality of radial openings therein forwardly of said front wall of the nozzle member for conducting air from said outer secondary air chamber to the combustion chamber within said combustion shell, said proportioning plates being provided with a first series of cooperating air shutter openings establishing communication between said main and inner secondary air chambers, with a second series of cooperating gas shutter openings establishing communication between the main and secondary gas chambers, and with a third series of air shutter openings establishing communication between the main and outer secondary air chambers, means for moving said movable proportioning plate to vary the effective size of the cooperating shutter openings, means for supplying air under pressure to the interior of said main air chamber, and means for supplying gas under pressure to the interior of said main gas chamber.

12. A gas burner assembly as set forth in claim **11** and wherein the front wall of the nozzle member is slightly spaced from the circular forward rim of the forwardly extending cylindrical wall so as to establish, in combination therewith, a narrow gap through which air may flow radially inwardly across the relatively large opening in said front wall.

13. A gas burner assembly as set forth in claim **11** and wherein the rear open end region of said combustion shell is slightly spaced from the cylindrical side wall which it surrounds and establishes, in combination therewith, a narrow annulus through which air may pass from the outer secondary air chamber to the combustion chamber.

14. A gas burner assembly as set forth in claim **11**, wherein the front wall of the nozzle member is slightly spaced from the circular forward rim of the forwardly extending cylindrical wall so as to establish, in combination therewith, a narrow gap through which air may flow radially inwardly across the relatively large opening in said front wall, and wherein the rear open end region of said combustion shell is slightly spaced from the cylindrical side wall which it surrounds and establishes, in

combination therewith, a narrow annulus through which air may pass from the outer secondary air chamber to the combustion chamber.

15. A gas burner assembly as set forth in claim **14** and wherein the individual openings of said first and third series of cooperating shutter openings are of such size and shape that upon angular movements of the front proportioning plate a substantially constant flow ratio of air and gas through the respective shutter openings obtains.

16. A gas burner assembly as set forth in claim **15** and wherein the individual openings of said second series of cooperating air shutter openings are so disposed with respect to each other and with respect to the individual openings of the first and third series of shutter openings that they remain in partial register in any angular position of the front proportioning plate.

17. In a gas burner assembly, in combination, a main burner casting in the form of a generally cylindrical cup-shaped body having a rear wall, a cylindrical side wall defining a forward open circular rim designed for attachment to the mating circular rim of a tube to be internally fired, and means forming an internal radially extending throat in said casting and terminating in a centrally disposed cylindrical wall defining a main gas chamber, said last named cylindrical wall being spaced from said side wall and defining a forward open circular rim coaxial with and spaced rearwardly from the circular rim of the side wall of the main burner casting, the annular space within said cup-shaped body between said cylindrical walls defining a main annular air chamber surrounding the main gas chamber, a transversely extending fixed circular proportioning plate fixedly secured to said main burner casting and extending across the open ends of the main gas and air chambers, a cooperating movable circular proportioning plate coaxially disposed in face-to-face sliding contact with said fixed proportioning plate and capable of limited angular turning movement about the common axis of said plates, the forward side of said front proportioning plate being provided with a forwardly extending cylindrical wall defining a circular forward rim and also in combination with the central region of said latter plate defining a secondary gas chamber forwardly of and coaxial with said main gas chamber, a cup-shaped nozzle member having a front wall disposed adjacent to said latter circular forward rim and a cylindrical side wall defining a rear open rim in seating contact with the forward side of the front proportioning plate and spaced from and surrounding the cylindrical wall which in part defines the secondary gas chamber, said cylindrical side wall of the nozzle member and said cylindrical wall which in part defines the secondary gas chamber in combination with an annular region of the front proportioning plate defining an annular inner secondary air chamber forwardly of the main air chamber and surrounding the secondary gas chamber, said front wall being provided with a relatively large central opening in communication with the secondary gas chamber and with a series of relatively small openings in the peripheral regions thereof, arranged in a circular row and in communication with the inner secondary air chamber, a fixed tubular cylindrical combustion shell coaxial with and having its rear open end region surrounding the cylindrical side wall of the nozzle member, said combustion shell projecting forwardly of the nozzle member and, in combinaton with the front wall of the latter, defining a forwardly opening internal combustion chamber adapted to be projected coaxially into the tube to be internally fired, said combustion shell having its rear open rim region projecting rearwardly into the cylindrical side wall of the cup-shaped body and, in combination therewith, defining an annular outer secondary air chamber forwardly of the main air chamber and surrounding the inner secondary air chamber, said combustion shell being provided with a plurality of radial openings therein forwardly of said front wall of the nozzle member for conducting air from said outer secondary air chamber to the combustion chamber within said combustion shell, means on the outer rim of said combustion shell and operative when said combustion chamber is projected into the tube to be fired to retard the flow of air forwardly through said outer secondary air chamber, said proportioning plates being provided with a first series of cooperating air shutter openings establishing communication between said main and inner secondary air chambers, with a second series of cooperating gas shutter openings establishing communication between the main and secondary gas chambers, and with a third series of air shutter openings establishing communication between the main and outer secondary air chambers, means for moving said movable proportioning plate to vary the effective size of the cooperating shutter openings, means for supplying air under pressure to the interior of said main air chamber, and means for supplying gas under pressure to the interior of said main gas chamber.

18. A gas burner assembly as set forth in claim **17** and wherein said means for retarding the flow of air forwardly through the outer secondary air chamber comprises a retention ring presenting a series of radially disposed circumferentially spaced baffles which are adapted to extend between the combustion shell and wall of the tube undergoing firing when the combustion chamber is projected into said tube.

19. A gas burner assembly as set forth in claim **18** and including, additionally, a forwardly extending frusto-conical flange formed on the rear rim of the combustion shell and projecting across said outer secondary air chamber within the axial confines of the cylindrical side wall of the cup-shaped body, said frusto-conical flange being formed with a circular row of spaced openings therethrough for restricting the flow of air forwardly through said latter air chamber.

20. In a gas burner assembly, in combination, a main burner casting having inner and outer concentric walls defining a generally cylindrical inner main gas chamber and an outer annular main air chamber coaxial with the inner gas chamber, the forward ends of said chambers being open, a flat circular rear proportioning plate fixedly secured to said casting and extending across the open ends of said chambers, a cooperating flat circular front proportioning plate coaxial with said rear proportioning plate and disposed in face-to-face sliding contact therewith for limited angular rotational movements about the common axis of the plates, a tubular wall projecting forwardly from the front face of said front proportioning plate in concentric relation with respect to said common axis and defining a forwardly opening secondary gas chamber forwardly of the main gas chamber, a cup-shaped nozzle member having a cylindrical side wall surrounding said tubular wall, concentric with said common axis and in combination with said tubular wall defining an annular inner secondary air chamber forwardly of the main annular air chamber, and an annular radial end wall extending across the forward end of said annular inner secondary air chamber, said end wall being provided with a series of spaced air openings therein, a cylindrical combustion shell coaxial with said common axis, projecting forwardly of the nozzle member and in combination with the latter defining a combustion chamber forwardly of the secondary gas and air chambers, said combustion chamber being in communication with said secondary gas chamber through the forward open end of the latter and in communication with the secondary air chamber through said spaced air openings, said combustion shell being adapted to be projected into one end of a tube to be internally fired and to define, in combination with the wall of said tube, an outer secondary air chamber, said proportioning plates being provided with a first series of cooperating shutter openings therein establishing communication between the main and secondary gas chambers, a second series of cooperating shutter openings therein establishing communication between the main and

inner secondary air chambers, and with a third series of cooperating shutter openings therein establishing communication between the main and outer secondary air chambers when the combustion sleeve is disposed within the tube undergoing firing, means for moving said front proportioning plate, means for supply air under pressure to the main air chamber, and means for supplying gas under pressure to the main gas chamber.

21. A gas burner assembly as set forth in claim **20** and wherein the outer rims of said proportioning plates are slightly spaced from the outer wall of the main burner casting so as to define an annular by-pass space for flow of air from the main air chamber into the outer secondary air chamber.

22. A gas burner assembly as set forth in claim **20** and wherein the annular radial end wall of the nozzle member is slightly spaced forwardly from the forward end of said tubular wall so as to define a narrow circular gap for inward flow of a thin curtain of air from the inner secondary air chamber across the open end of said secondary air chamber.

References Cited by the Examiner

UNITED STATES PATENTS

1,994,547	3/1935	Urquhart	158—1.5

FOREIGN PATENTS

752,333	7/1956	Great Britain.

FREDERICK MATTESON, Jr., *Primary Examiner.*

CHARLES SUKALO, *Examiner.*