B. VERGARA.

CUTTER FOR PERFORATING MUSIC SHEETS.

APPLICATION FILED MAR. 15, 1918.

1,305,323. Patented June 3, 1919.

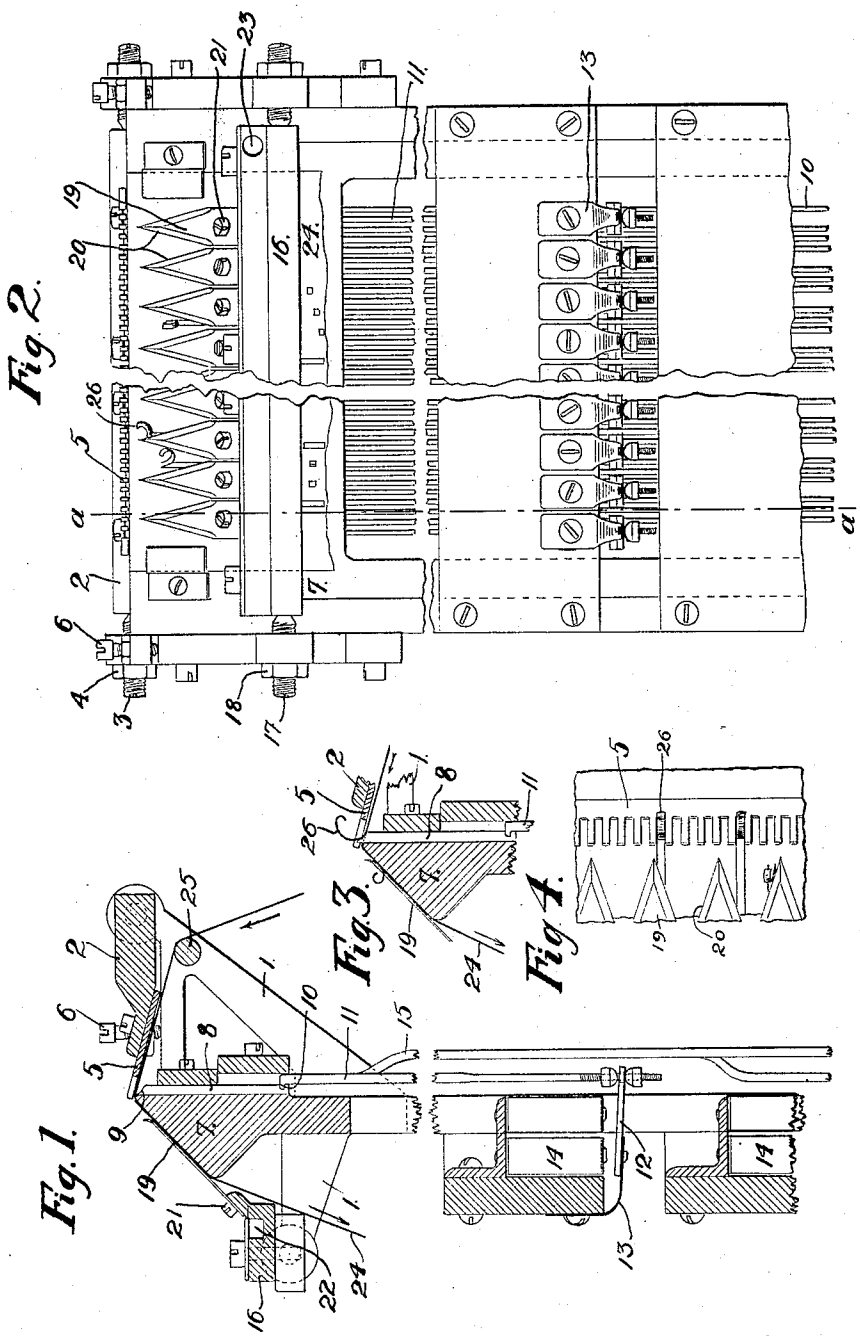

Inventor:
Bartolomé Vergara
By Louis Rimelzhe
Attorney.

THE NORRIS PETERS CO., PHOTO-LITHO., WASHINGTON, D. C.

UNITED STATES PATENT OFFICE.

BARTOLOMÉ VERGARA, OF MEXICO, MEXICO.

CUTTER FOR PERFORATING MUSIC-SHEETS.

1,305,323. Specification of Letters Patent. Patented June 3, 1919.

Application filed March 15, 1918. Serial No. 222,570.

To all whom it may concern:

Be it known that I, BARTOLOMÉ VERGARA, citizen of the United Mexican States, residing at Mexico City, Federal District, Mexico, have invented certain new and useful Improvements in Cutters for Perforating Music-Sheets, of which the following is a specification.

The present invention has reference to perforating mechanism for music sheets; and it resides in the provision of certain improvements, relating primarily to the cutters and hereinafter fully described.

In mechanisms of the character specified, it has been customary, heretofore, to utilize a set of punches, arranged in a row and designed to cut out the perforations complete at a single movement thereof, and to operate them by means of a reciprocating impact element of some kind, between which element and the punches a wedge-shaped member is interposed in position to transmit the blows of the latter to the former, the length of the perforations being dependent upon the extent of the period during which the aforesaid member is maintained in such position. This arrangement, however, has proven objectionable, because of the fact that it entails the simultaneous punching of all of the perforations, which, in turn, necessitates the sheet being fed forward in leaps, and then only when all of the punches are clear of the sheet. Usually, the sheet advances a distance equal to half the length of the perforation, in order to obtain perforations of a length proportionate to that of the corresponding notes; but for that very reason the perforations cannot be conveniently distributed over the sheet when recording a trill or tremolo, or a rapid succession of notes the intervals of which are not exactly a multiple of the movement of the punches. If the punches could act at independent times, then the drawback would be overcome; but on the other hand, the sheet could not advance, since some one or more of the punches would always be in action. The punches must, therefore, operate independently as to time, and in an absolutely continuous manner in order to avoid stopping the movement of the sheet.

The object of my invention is to provide an improved cutting mechanism which includes a set of cutting knives as distinguished from punches, and in which the various knives or cutters are capable of operating in the manner just stated, the preferred arrangement being such that the said knives are utilized to pierce the sheet and cut narrow tongues therein which are thereafter severed by means of a second set of knives as the sheet continues to advance, the length of the tongues depending upon the length of the corresponding notes. The cutting knives move into and out of position to pierce and cut the sheet, and remain stationary or motionless during the entire time they occupy that position.

An embodiment of the invention is illustrated in the accompanying drawing, wherein:

Figure 1 is a vertical cross-section of the improved mechanism, taken on line *a*—*a* of Fig. 2, the latter being a fragmental front elevation of said mechanism;

Fig. 3 is a fragmental vertical section, generally similar to Fig. 1, but showing one of the cutters in projected or operative position; and

Fig. 4 is a fragmental plan view of a comb associated with the cutters.

Referring more particularly to said drawing, 1 indicates the frame of the mechanism, and 2 a bridge which is pivotally mounted at its ends in said frame, by means of adjustable screw pivots 3 that fit in openings in the frame walls and are equipped with fastening nuts 4. The under side of the said bridge has fastened to it a comb 5, the latter being designed for co-action with the cutters 8 in the manner subsequently explained.

Directly in front of the bridge there is arranged within the frame a combined sheet support and cutter guide 7, the upper portion of which is enlarged or thickened, as shown, and has a substantially triangular shape in cross-section, with the apex of the triangle directed forward. The guide part of this element 7 is in the nature of a series of open-ended vertical channels or passages, one for each cutter 8, the cutters having a sliding movement in said channels in opposite directions. The cutters, which are formed with tapered and pointed upper ends 9, are operated from the keys of the piano, as will be understood, through the agency of suitable connections; such connections, as disclosed in the present construction, being operated electro-magnetically,

though they may be actuated by means of operating devices of other characters if desired. In the arrangement illustrated, the magnets are indicated at 14, and each has associated with it an armature 12, which is located beneath the respective magnet and is normally held in lowered position by a spring 13. The free rear ends of the armatures 12 are adjustably coupled to vertically-arranged connecting bars 11, provided at their upper ends with hooks 10 for engagement with the lower ends of the cutters 8; the arrangement being such that when any magnet is energized, consequent upon the depression of the corresponding key, its armature will be attracted and will push upward the bar 11 with which it is connected, said bar, in turn, forcing its corresponding cutter in the same direction and causing its pointed end 9 to pierce the sheet. The cutters are located directly beneath the spaces between the teeth of the comb 5, across the under face of which latter the sheet, indicated at 24, is caused to travel, so that the sharpened edges of the end 9 of the cutter coöperate with the edges of the comb teeth in producing a shearing action which results in a narrow strip or tongue 26 being cut from the sheet and curled upwardly, as represented in Fig. 3, the cutters being maintained stationary in their elevated or cutting position as long as the corresponding keys are depressed. As soon as the pressure upon the key is relieved, the magnet becomes deënergized, and the spring 13 then lowers the armature 12 and, with it, the connecting bar and its cutter, the parts assuming the positions disclosed in Fig. 1. The magnets are preferably arranged in several rows, located one above another, on account of the limited space between adjacent connecting bars 11, some of which are curved, as at 15, to clear the armatures.

In front of the sheet support 7, there is arranged a second bridge 16, which is supported, similarly to the bridge 2, by pivot screws 17 carrying fastening nuts 18. This bridge 16 has secured to it, by means of screws 21, a series of knives 19, which are substantially triangular, as shown, and which have their inclined side edges 20 sharpened for the purpose of effecting a shearing action, as hereinafter explained. The bridge 16 is also provided with a longitudinal channel or duct 22, into which air under pressure is introduced through the inlet 23 at one end thereof, the air being distributed through suitable perforations, not shown, between the knives 19 and the sheet, so as to remove the tongues 26, after the latter have been severed by said knives from the sheet. The sheet is fed through the apparatus in the usual way, or in any other desired manner, and passes over a horizontal guide rail 25 before reaching the comb 5, the bridges 2 and 16 having first been raised to permit the insertion of the sheet, after which they are lowered to active position.

In operation, the depression of any one of the piano keys causes the corresponding magnet 14 to be energized, and the cutter 8 associated therewith to be raised, the pointed end 9 of the cutter cutting a narrow strip 26 from the sheet, as previously explained, due to its coaction with the comb 5. The cutter remains stationary or motionless at this time, and the length of the cut depends, of course, upon the duration of the interval during which the key remains depressed and the cutter elevated, or, in other words, upon the length of the note to be recorded, as will be understood, the cutter dropping into ineffective position immediately the magnet becomes deënergized consequent upon the removal of pressure from the key. The sheet, however, is caused to advance continuously during the operation of the apparatus, and is perfectly free to do so by reason of the fact that the cutters 8 exert a slitting action upon the sheet which offers no interference whatever to the latter's movement. As the sheet advances, the tongues, which have been cut out and curled upward by the action of the cutters, pass over the top of the support 7 and across the upper face thereof, and ultimately reach the zone of action of the knives 19. The edges 20 of the said knives 19 are not only sharpened, but are disposed at an angle to each other, as stated, so that as the sheet continues its progress beneath them, they will come into engagement with the curled-up tongues at the bases of the latter, and, hence, will sever said tongues cleanly from the sheet at such point, this holding true irrespective of the length of the tongues, and of their position upon the sheet, since the aforesaid cutting edges 20 form, in effect, an uninterrupted zig-zag line which extends entirely across the sheet, due to the fact that the knives 19 are set so close together upon the bridge 16 that the rear ends of the cutting edges of adjacent knives meet, or virtually meet. The severed tongues are blown off the sheet by the jets of air issuing from the air duct 22.

I claim as my invention:—

1. A music sheet perforating apparatus, comprising a set of independently-operable cutters movable into and out of position to pierce the sheet and held stationary while occupying such position so as to cut out narrow tongues in the sheet and curl them outward; and means operative to shear off said tongues at their bases as the sheet passes beyond the punches.

2. A music sheet perforating apparatus, comprising a set of independently-operable cutters adapted to cut out narrow tongues in the sheet and curl them outward; and shearing means extending in an uninter-

rupted, zig-zag line entirely across the sheet to sever said tongues from said sheet at their bases as the sheet passes beyond the cutters.

3. A music sheet perforating apparatus, comprising a set of independently-operable cutters adapted to cut out narrow tongues in the sheet and curl them outward; and a series of knives arranged in advance of the cutters and having inclined, sharpened edges located in the path of the tongues and disposed at an angle thereto, so as to shear off said tongues at their bases.

4. A music sheet perforating apparatus, comprising a set of reciprocatory cutters, each having a sharpened end, said cutters being movable into position to cause their said ends to pierce the sheet and being held stationary while occupying such position, and a comb associated with said cutters and having the spaces between its teeth alining with the cutters to permit their sharpened ends to pass therethrough, the edges of said teeth coöperating with the said cutter ends to permit the latter to cut out narrow tongues in the sheet, and curl them outward.

5. A music sheet perforating apparatus, comprising a set of reciprocatory cutters, each having a sharpened end, said cutters being movable into position to cause their said ends to pierce the sheet and being held stationary while occupying such position; a comb associated with said cutters and having the spaces between its teeth alining with the cutters to permit their sharpened ends to pass therethrough, the edges of said teeth coöperating with the said cutter ends to permit the latter to cut out narrow tongues in the sheet, and curl them outward; and means operative to shear off said tongues at their bases as the sheet passes beyond the cutters.

6. A music sheet perforating apparatus, comprising a set of reciprocatory cutters, each having a sharpened end adapted to pierce the sheet; a comb associated with said cutters and having the spaces between its teeth alining with the cutters to permit the latter to pass therethrough, the edges of said teeth coöperating with the said cutter ends to permit the latter to cut out narrow tongues in the sheet and curl them outward; and a series of knives arranged in advance of the cutters and having inclined, sharpened edges located in the path of the tongues and disposed at an angle thereto, so as to shear off said tongues at their bases.

7. A music sheet perforating apparatus, comprising means for cutting out narrow tongues in the sheet and curling them outward; and shearing means extending in a zig-zag line across the sheet to sever said tongues at their bases from the sheet as the latter passes beyond the cutting means.

8. A music sheet perforating apparatus, comprising a frame; a bridge mounted therein; a comb attached to the bridge and across which the sheet is arranged to pass; a sheet support located in advance of said bridge; means mounted in said support for co-action with said comb to cut out narrow tongues in the sheet and curl them outward; a bridge arranged in front of said support; and means carried by the last-named bridge and extending over said support for shearing off said tongues at their bases during the passage of the sheet over said support.

9. A music sheet perforating apparatus, comprising a frame; a bridge mounted therein; a comb attached to the bridge and across which the sheet is arranged to pass; a sheet support located in advance of said bridge and having a series of open-ended channels therein which register with the spaces between the teeth of said comb; a set of reciprocatory cutters slidably fitting in said channels and having sharpened cutting ends adapted to pierce the sheet and to co-act with the edges of said teeth in cutting out narrow tongues in the sheet and curling them outward; and means arranged in front of said support and extending over the same for shearing off said tongues at their bases during the passage of the sheet over said support.

10. A music sheet perforating apparatus, comprising a frame; a bridge pivotally mounted therein; a comb attached to the under face of the bridge and across the lower face of which the sheet is arranged to pass; a sheet support located in front of said bridge; a set of reciprocatory cutters connected with said support for co-action with said comb to cut out narrow tongues in the sheet and curl them outward; and means arranged in front of said support and extending over the same for shearing off said tongues at their bases during the passage of the sheet over said support.

In testimony whereof I have affixed my signature.

BARTOLOMÉ VERGARA.

Copies of this patent may be obtained for five cents each, by addressing the "Commissioner of Patents, Washington, D. C."