April 25, 1961 A. R. SCHOLIN 2,981,116

MOTION TRANSMITTING APPARATUS FOR PUMP PLUNGERS AND THE LIKE

Filed May 20, 1957 3 Sheets-Sheet 1

FIG. 1

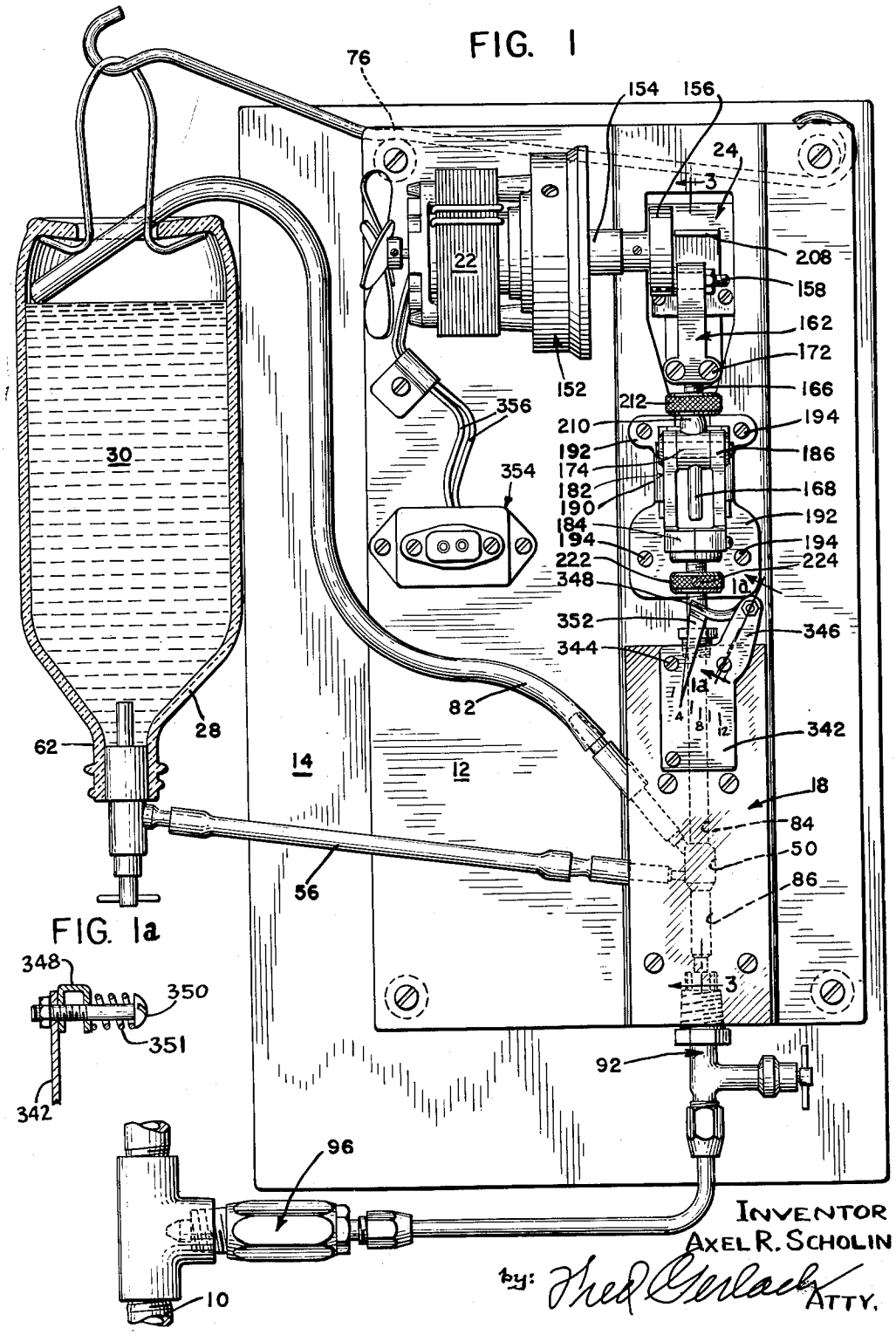

FIG. 1a

INVENTOR
AXEL R. SCHOLIN
by: Fred Gerlach ATTY.

FIG. 2

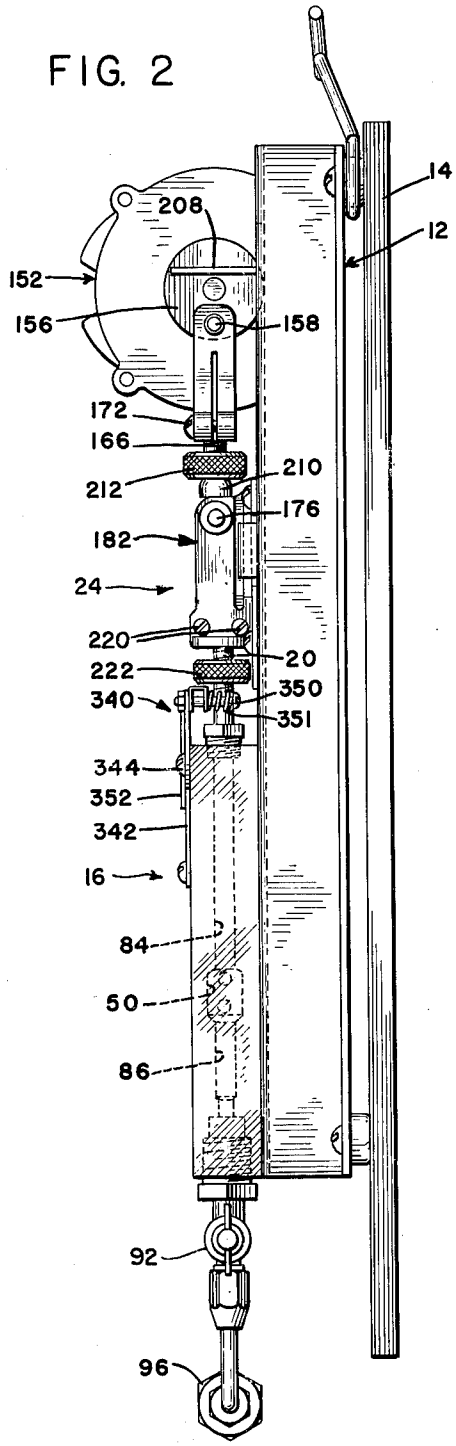

INVENTOR
AXEL R. SCHOLIN
by: Fred Gerlach ATTY.

April 25, 1961 A. R. SCHOLIN 2,981,116

MOTION TRANSMITTING APPARATUS FOR PUMP PLUNGERS AND THE LIKE

Filed May 20, 1957 3 Sheets-Sheet 3

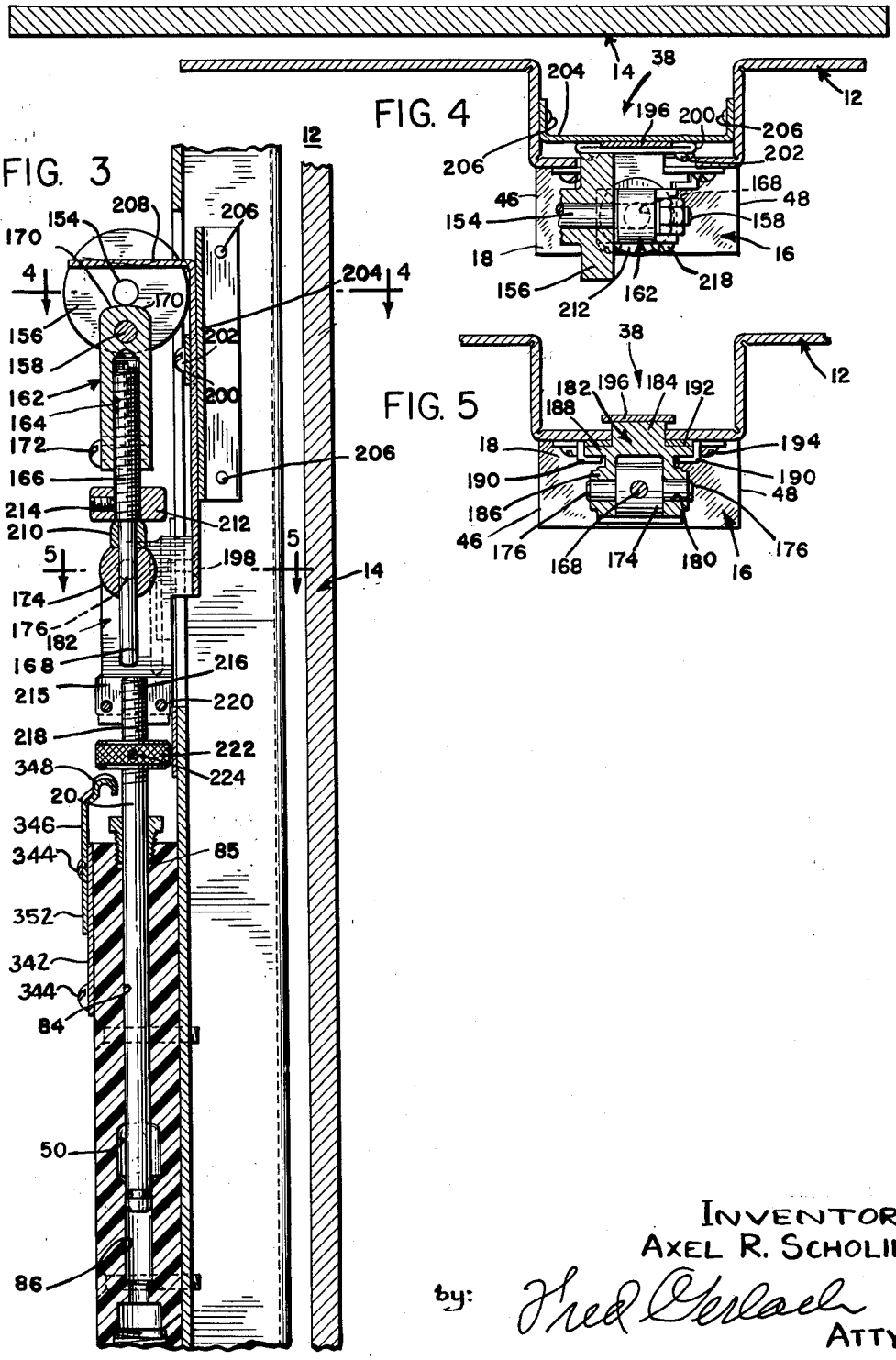

INVENTOR
AXEL R. SCHOLIN

by: Fred Gerlach
ATTY.

United States Patent Office

2,981,116

Patented Apr. 25, 1961

1

2,981,116

MOTION TRANSMITTING APPARATUS FOR PUMP PLUNGERS AND THE LIKE

Axel R. Scholin, 4820 N. Paulina St., Chicago 40, Ill.

Filed May 20, 1957, Ser. No. 660,120

2 Claims. (Cl. 74—44)

The present invention relates to apparatus for transmitting reciprocal motion to pump plunger or the like, and the invention has been illustrated as being applied to an injection pump associated with metering apparatus which is designed for use in connection with the chemical treatment of water for purification, softening, therapeutic or other purposes, as, for example, in commercial water treatment systems wherein chlorine, a softening solution, fluorine or other substance in liquid form or in solution is introduced in measured quantities into water which is flowing through a conduit leading to a storage tank or reservoir. The invention is, however, capable of other uses and the motion-transmitting apparatus of the present invention may, if desired, with or without modification, be employed for imparting reciprocal motion to variable stroke plungers associated with pumping mechanism designed for a wide variety of other purposes. Irrespective, however, of the particular use to which the invention may be put, the essential features thereof are at all times preserved.

It is among the principal objects of the present invention to provide a novel means for varying the amplitude of the stroke of a pump plunger so that the quantity of fluid delivered by the pump may be regulated within very fine limits, the adjustment by means of which such regulation may be obtained being accomplished by the simple expedient of turning a thumb screw in one direction or the other. Toward this end, the invention contemplates the provision of an adjusting means which may be manipulated during operation of pumping apparatus.

Other objects and advantages of the invention, not at this time enumerated, will become more readily apparent as the nature of the invention is better understood.

In the accompanying three sheets of drawings forming a part of this specification a preferred embodiment of the invention has been illustrated in connection with a water treatment system.

In these drawings:

Fig 1 is a front elevational view of a metering apparatus constructed in accordance with the principles of the present invention and showing the same operatively connected in a water treatment system;

Fig. 1*a* is an enlarged sectional view taken substantially along the line 1*a*—1*a* of Fig. 1;

Fig. 2 is a side elevational view of the structure shown in Fig. 1;

Fig. 3 is a sectional view taken substantially along the line 3—3 of Fig. 1;

Fig. 4 is a sectional view taken substantially along the line 4—4 of Fig. 3; and

2

Fig. 5 is a sectional view taken substantially along the line 5—5 of Fig. 3.

Referring now to the drawings in detail and in particular to Figs. 1 to 3, inclusive, the metering apparatus of the present invention has been shown and described herein as being operatively associated with a water purification or treatment system wherein a suitable additive is forced into the water which is in transit through a pipe **10**. Briefly, the system involves in its general organization a base plate or panel member **12** adapted to be placed in a vertical position and secured to a wall surface or the like **14** and on which there is operatively mounted an injection pump assembly **16** including a pump body **18** in which there reciprocates a pumping plunger **20**, a driving motor **22**, and a train of driving mechanism designated in its entirety at **24** and by means of which the plunger **20** and motor **22** are operatively connected in driving relationship. Upon reciprocation of the plunger **20**, quantities of the treatment liquid **30** are withdrawn from a receptacle **24** and delivered to the conduit **10**.

The system with which the pump assembly is associated includes various functional instrumentalities such as an outflow check valve **92**, an injection valve **96**, and other devices not pertinent to the present invention.

The pump plunger **20** is reciprocable in a vertical bore **84** between an elevated position wherein the lower end thereof is disposed above a pump chamber **50**, and a lowered position wherein this end of the plunger projects through the chamber **50** and forces entrapped fluid in the chamber through a bore **86** toward the outflow check valve **92**. Fluid is conducted to the chamber **50** through a line **56** and a bleeder line **82** extends from the chamber **50** to the atmosphere.

The driving train of mechanism **24** for reciprocating the plunger **20** is adapted to be driven from the electric motor **22** which is mounted adjacent the upper left hand corner of the panel member **12** and which is operatively connected to a gear reduction device **152** having an output shaft **154**. The output shaft **154** of the gear reduction device **152** has secured thereto a driving disk **156** carrying an eccentric crank pin **158**.

A split follower yoke **162** has its upper end pivoted on the crank pin **158** and is formed with a split bore **164** in which there is threadedly received the upper end of a follower rod **166** having a lower cylindrical stem **168**. The upper end of the yoke **162** is rounded as at **170** for a purpose that will be made clear presently. A pair of clamping screws **172** serve to draw the opposed yoke arms together in clamping relation with respect to the follower rod so that the latter may be clamped in any desired adjusted position within the split bore **164**. The stem **168** projects diametrically and completely through a guide sleeve **174** having trunnions **176** formed thereon which project into a pair of aligned holes **180** formed in a vertically reciprocable cage-like slide member **182** having a body portion **184** and a pair of forwardly extending parallel side arms **186** in which the holes **180** are formed. The body portion **184** is formed with a pair of oppositely extending flanges **188** which project into channel guideways **190** provided in a bracket **192** secured by screws **194** to the panel **12**.

The slide member **182** constitutes one element of a vertically reciprocable two-piece plunger-supporting carriage assembly, the other element of which is in the form

of a sheet metal plate **196** which has its lower end region secured by screws **198** to the rear face of the slide member **182**. The plate **196** is guided in its vertical movements by means of a strap **200** secured by screws **202** to a bracket **204** secured to the panel **12** by screws **206**. The plate **196** is formed with a forwardly extending abutment plate **208** which overlies the upper rounded end **170** of the follower yoke **162** and which is designed for engagement therewith during the upstroke of the carriage assembly.

Mounted on the stem **168** of the follower rod **166** and seated on the guide sleeve **174** is a thrust collar **210** designed for engagement with an adjustable thrust nut **212** having a knurled periphery for manipulation thereof and which is threadedly received on the threaded portion of the follower rod **166**. A set screw **214** serves to secure the thrust nut **212** in any desired vertical position of adjustment on the rod **166**.

As shown in Fig. 3, the lower end of the slide member **182** is formed with an integral split collar **215** providing a split bore **216** which threadedly receives therein the upper threaded end **218** of the plunger **20**. A pair of clamping screws **220** serve to draw the split sides of the bore **216** together on the threaded end **218** of the plunger whereby the latter may be secured in any desired position of vertical adjustment relative to the plunger-supporting carriage. To effect such adjustment of the plunger **20**, as well as to perform certain calibration and initial setting adjustments as will be described subsequently, a knurled nut **222** is threadedly received on the plunger **20** in the upper regions thereof. A set screw **224** serves to lock the nut **222** in any desired adjusted position along the threaded portion **218** of the plunger **20**.

From the above description it will be seen that the stroke of the plunger **20** is dependent upon the amplitude of reciprocation of the plunger-supporting carriage **182**, **196**. When the upper end of the plunger **20** is secured in the split bore **216**, and the upper end of the follower rod **166** is secured in the split bore **164**, both in selected positions of initial adjustment, the uppermost position of the plunger at the top of each stroke thereof is fixed by virtue of the fact that the upper rounded surface **170** of the follower yoke **162** engages the underneath surface of the forwardly extending horizontal abutment plate **208** and forces the entire carriage assembly upwardly to the uppermost position of which it is capable of assuming as shown in dotted lines in Fig. 5.

The downward stroke of the plunger **20** is effected by means of the adjustable thrust nut **212** which is threadedly received on the plunger. Upon initial downward movement of the follower yoke **162** under the driving influence of the crank pin as the latter moves through the first 180° of its circular path of movement, the yoke will describe a compound movement having increments of both oscillation and reciprocation and the cylindrical yoke stem **162** will slide in the guide sleeve **174** until such time as the thrust nut **212** strikes the thrust collar **210**, at which time the collar will engage the guide sleeve **174** and, through the medium of the trunnions **176**, it will cause the cage-like slide member **182** and plate **196** to which it is attached to be moved downwardly until the thrust nut **212** reaches the bottom of its path of travel. During such downward motion of the follower yoke **162** and carriage assembly, the rounded upper end of the yoke moves out of contact with the underneath surface of the abutment plate **208** and a period of lost motion exists until such time as the thrust nut **212** engages the thrust collar **210**. The amplitude of the downward stroke of the carriage and plunger may thus be varied by the simple expedient of rotating the thrust nut **212** on the threaded portion of the plunger in one direction or the other. For a shorter plunger stroke, the thrust nut **212** will be rotated in a direction to elevate the same on the plunger and, conversely, for a longer plunger stroke, the nut will be rotated in a direction to decrease its elevation on the plunger.

The quantity of treatment fluid displaced from the bore **84** in the pump body **18** during each downward stroke of the plunger **20** may be measured in fluid drops, in cubic millimeters or in any other desired unit of volumetric measurement. In order to indicate the volumetric displacement of fluid from the bore **84** during each plunger stroke, a cooperating scale and pointer arrangement designated in its entirety at **340** (Fig. 2) is provided on the pump body **18** and is designed for cooperation with the knurled nut **222** on the plunger **20**. The scale, which in the present instance is calibrated in fluid drops, is scored, etched, printed or otherwise applied to the outer face of a flat scale plate **342** fixedly secured by screws **344** to the outer face of the pump body **18**. The plate **342** is formed with an upstanding arm **346** having an abutment finger **348** mounted for swinging movement at the upper end thereof. A nut and bolt assembly **350** (see also Fig. 1*a*) effects the pivotal connection between the abutment finger **348** and arm **346** and a compression spring **351** serves to normally urge the arm and abutment finger into frictional sliding contact with each other so that the finger will remain in any position to which it is moved. The finger **348** carries a depending pointer **352** designed for registry with the scale provided on the scale plate **342**. It will be observed from an inspection of Fig. 1 that increased depression of the abutment finger **348**, i.e., movement thereof in a counterclockwise direction, will increase the scale reading. The abutment finger **348** is positioned beneath the knurled nut **222** so that during the downstroke of the latter, in unison with the movement of the plunger **20**, the finger will be engaged by the nut and the pointer thus caused to register with an indicia on the scale which is commensurate with the displacement of fluid according to the selected unit of measurement from the bore **86**. After an initial displacement of the pointer **352** by the nut **222**, the pointer will remain in the position to which it has been moved until such time as an increase in displacement is reflected by further adjustment of the nut **222** downwardly on the plunger **20**. If an adjustment is made upwardly on the plunger **20** to effect a decrease in volumetric displacement of fluid from the bore **86**, it is merely necessary to manually move the pointer **352** to a position where it will be engaged by the nut **222** and thus brought to a new position of registry with the indicia on the scale plate.

Referring now to Fig. 1, the electric motor **22** which operates the driving mechanism **24** is suitably mounted on the panel member **12** and it supports the gear reduction device **152** at a distance from the plane of the panel proper wherein the output shaft **154** thereof is spaced from the panel. The motor **22** may be supplied with current from a pronged receptacle **354** fixedly secured to the panel at any suitable location and to which the motor is connected by lead wires **356**. The receptacle **354** is adapted for connection to a suitable cord (not shown) leading from an electrical wall outlet or the like.

From the above description it is believed that the construction, operation and many advantages of the herein described plunger control apparatus will be apparent. The invention is not to be limited to the exact arrangement of parts shown in the accompanying drawings or described in this specification as various changes in the details of construction may be resorted to without departing from the spirit of the invention. Only insofar as the invention has particularly been pointed out in the accompanying claims is the same to be limited.

Having thus described the invention what I claim as new and desire to secure by Letters Patent is:

1. Apparatus for transmitting reciprocal motion to a pump plunger or the like, said apparatus comprising a reciprocable carriage adapted to be connected to the outer end of said plunger for movement in unison there-

with between corresponding retracted and advanced positions and presenting first and second opposed abutments respectively arranged in spaced relationship, an electric motor having an output shaft, an eccentric crank arm extending between said abutments and mounted on said shaft for revolution about the axis of the shaft upon rotation of the latter, a follower pivoted to the crank arm at one end and having a portion thereof slidably guided in said first abutment, said follower having a contact surface thereon designed for camming engagement with said second carriage abutment for moving the carriage to its retracted position and a second contact surface thereon designed for engagement with said first abutment for moving the carriage to its advanced position, and means for adjustably moving one of said contact surfaces relative to the other contact surface to vary the distance between the contact surfaces whereby varying degrees of lost motion may be attained between said contact surfaces and the abutments with which they are respectively engageable.

2. The combination set forth in claim 1 wherein the adjustably movable contact surface is the surface which is engageable with said first abutment.

References Cited in the file of this patent

UNITED STATES PATENTS

214,203	Simpson	Apr. 8, 1879
369,289	Hyatt	Aug. 30, 1887
793,499	Bain	June 27, 1905
2,030,296	Horstmann	Feb. 11, 1936
2,257,387	Kinkade	Sept. 30, 1941
2,291,889	Evans et al.	Aug. 4, 1942
2,564,793	Seter	Aug. 21, 1951
2,770,972	Gratzmuller	Nov. 20, 1956
2,783,652	Smith	Mar. 5, 1957
2,841,991	Saalfrank	July 8, 1958

FOREIGN PATENTS

37,339	Sweden	1913