Nov. 21, 1939. M. J. BEALE 2,181,006

PORTABLE DISPENSING TANK

Filed June 21, 1939 2 Sheets-Sheet 1

Fig. 1.

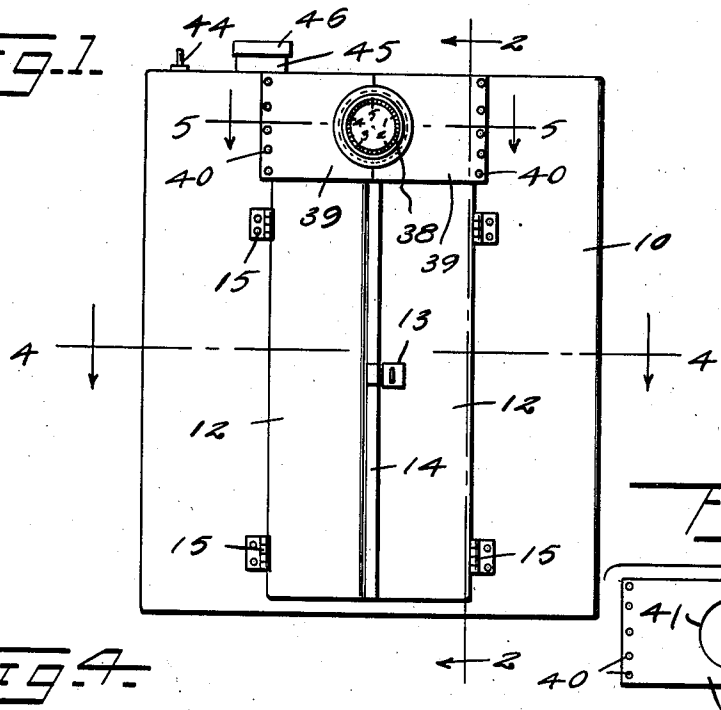

Fig. 6.

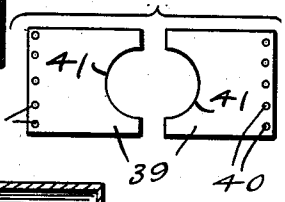

Fig. 4.

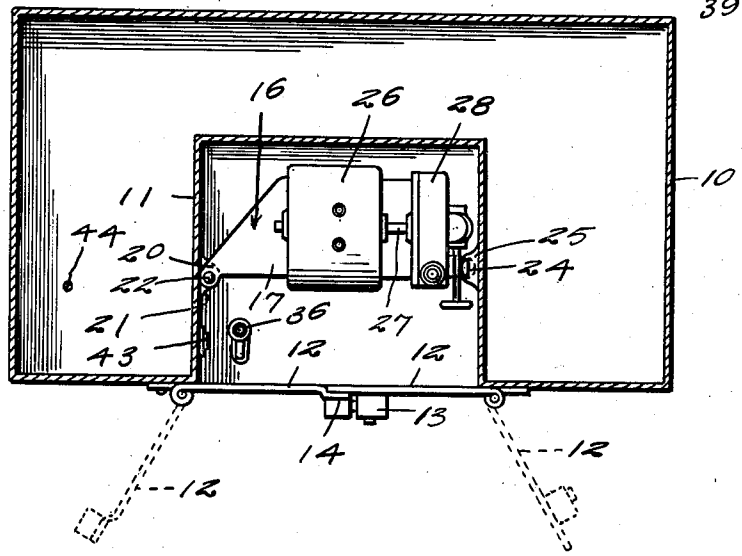

Fig. 5.

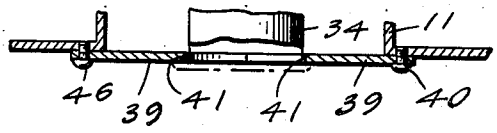

Martin J. Beale

INVENTOR

BY Victor J. Evans & Co.

ATTORNEYS

Nov. 21, 1939. M. J. BEALE 2,181,006

PORTABLE DISPENSING TANK

Filed June 21, 1939 2 Sheets-Sheet 2

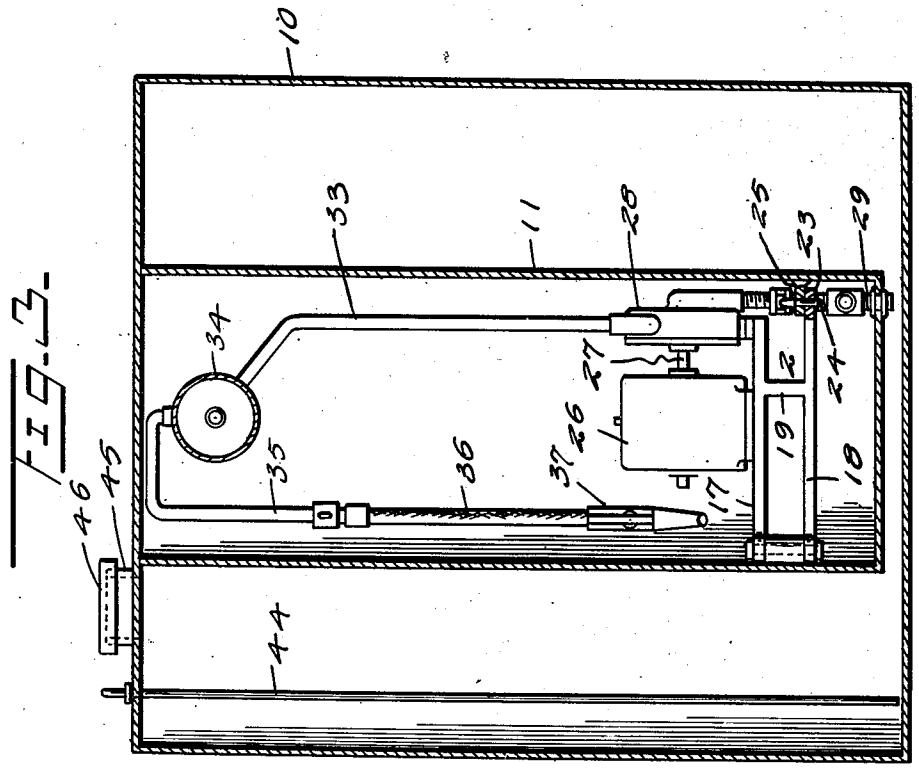

FIG. 2.

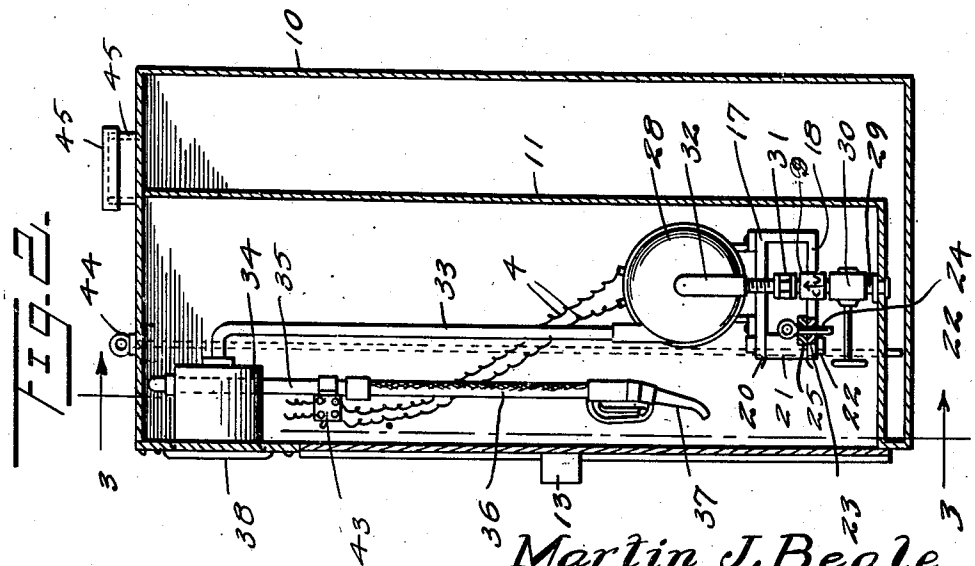

Martin J. Beale
INVENTOR

BY Victor J. Evans & Co.
ATTORNEYS

Patented Nov. 21, 1939

2,181,006

UNITED STATES PATENT OFFICE

2,181,006

PORTABLE DISPENSING TANK

Martin J. Beale, Brooklyn, N. Y.

Application June 21, 1939, Serial No. 280,389

3 Claims. (Cl. 221—95)

This invention relates to a portable dispensing tank and has for an object to provide a tank having a pump compartment built into a tank and extending from the top to nearly the bottom of the tank, the pump compartment also housing a gauge which is enclosed wholly within the top of the compartment and is provided with an illuminating dial exposed upon the front of the tank, all of the machinery being thus concealed within the tank itself.

A further object of the invention is to provide a bracket hinged to one side of the compartment and removably secured to the other side of the compartment, for supporting the pump, the motor, the gauge and dispensing hose as a unit to be swung out of the pump compartment to the exterior of the tank for inspection and repairs.

A further object is to provide apparatus of this character which will be formed of a few strong, simple and durable parts which will be inexpensive to manufacture and which will not easily get out of order.

With the above and other objects in view the invention consists of certain novel details of construction and combinations of parts hereinafter fully described and claimed, it being understood that various modifications may be resorted to within the scope of the appended claims without departing from the spirit or sacrificing any of the advantages of the invention.

In the accompanying drawings forming part of this specification,

Figure 1 is a front elevation of a portable dispensing tank constructed in accordance with the invention.

Figure 2 is a vertical sectional view of the tank taken on the line 2—2 of Figure 1.

Figure 3 is a vertical sectional view of the tank taken on the line 3—3 of Figure 2.

Figure 4 is a cross sectional view of the tank taken on the line 4—4 of Figure 1.

Figure 5 is a cross sectional view taken on the line 5—5 of Figure 1 showing the supporting plate for the gauge.

Figure 6 is a front elevation of the sectional plate for supporting the gauge with the sections separated.

Referring now to the drawings in which like characters of reference designate similar parts in the various views, 10 designates a portable tank of substantially rectangular cross section. A compartment 11 is disposed in the tank and opens out through the front of the tank, the horizontal and vertical dimensions of the compartment being less than the similar dimensions of the tank, as best shown in Figures 2 and 4. The open side of the compartment is closed by two hinged doors 12 equipped with a suitable lock 13, one of the doors having a flange 14 which overlaps the edge of the other door, as best shown in Figure 4. The doors are hinged at the outer edges to the front side of the tank, as shown at 15, so that the doors swing outwardly.

A bracket 16, including a top plate 17 and a bottom plate 18 connected by a web 19 intermediate the ends of the plates, is provided with hinge eyes 20 through which, and hinge lug 21 projecting from one side wall of the compartment, a hinge pintle 22 is passed. As best shown in Figure 3, the bottom plate 18 extends beyond the top plate and is provided with an opening 23 to receive a locking pin 24 which is passed downwardly through an apertured lug 25 projecting from the other side wall of the compartment. Thus when the locking pin is removed the bracket may be swung out of the compartment on the hinge pintle 22 as a pivot.

An electric motor 26 is supported upon the top plate 17 of the bracket and a shaft 27 of the motor drives a pump 28 which is mounted on the top plate 17. An inlet pipe 29 projects through the bottom of the compartment and is equipped with a control valve 30 and a check valve 9. The inlet pipe is connected through the medium of a union 31 with the pump inlet pipe 32 as best shown in Figure 2. This union may be of the usual type having a right and left hand thread connection with the inlet pipe 29 and inlet pipe 32 so that it may be backed off to disconnect both inlet pipes and permit the machinery being rocked out of the compartment.

An outlet pipe 33 for the pump extends upwardly in the compartment and is connected to a conventional gauge 34 which is equipped with an inverted J-shaped outlet pipe 35. A hose 36 and nozzle 37 extend downwardly from the outlet pipe 35 and are disposed toward the front of the compartment so as to be within convenient reach when the doors 12 are opened as shown in Figure 4.

The gauge is provided with a dial 38 which is exposed exteriorly of the compartment.

By referring to Figures 1, 5 and 6, it will be seen that a pair of plates 39 are removably secured at the outer edges of the tank 10 through the medium of screws 40. These plates are provided with half round recesses 41, the walls of which embrace the gauge in rear of the dial, as best shown in Figure 2. When the machinery

is to be swung out of the compartment these plates are removed so that the front of the compartment above the doors will also be opened to permit the gauge being swung out of the compartment with the motor and pump as a unit.

The conductor wires 42 for the electric motor are conducted to a conventional switch 43 on one side wall of the compartment and service wires to the switch may be conducted through the tank or through the compartment walls in any preferred manner.

A gauge rod 44 extends downwardly from the top of the tank to permit of the depth of gasoline or the like to be gauged from time to time. A filling tube 45 is connected to the top of the tank and enclosed by a cap 46.

Since the operation of the device has been described, as the description of the various parts progressed, it is thought that the construction of the invention will be fully understood without further explanation.

What is claimed is:

1. In liquid dispensing apparatus, a tank, a compartment in the tank opening out through the front side of the tank, the horizontal and vertical dimensions of the compartment being smaller than the corresponding dimensions of the tank, door means closing the open side of the compartment, a bracket secured to a wall of the compartment, an electric pump mounted upon the bracket, a pipe extending from the bottom of the tank through the bottom of the compartment to the inlet of the pump, a pipe extending from the outlet of the pump through the top of the compartment, a gauge located in the compartment at the top thereof, a pipe connecting the gauge with the outlet of the pump, a dial for the gauge exposed exteriorly of the compartment, and a hose extending from the gauge and concealed within the compartment.

2. In liquid dispensing apparatus, a tank, a compartment in the tank opening out through the front side of the tank, the horizontal and vertical dimensions of the compartment being smaller than the corresponding dimensions of the tank, door means closing the open side of the compartment, a bracket hinged at one end to a wall of the compartment, means removably securing the free end of the bracket to the opposite wall of the compartment whereby the bracket may be swung out of the compartment to the exterior of the tank when said door means is opened, an electric pump mounted upon the bracket, a pipe extending from the bottom of the tank through the bottom of the compartment to the inlet of the pump, a pipe extending from the outlet of the pump through the top of the compartment, a gauge located in the compartment at the top thereof, a pipe connecting the gauge with the outlet of the pump, a dial for the gauge exposed exteriorly of the compartment, and a hose extending from the gauge and concealed within the compartment.

3. In liquid dispensing apparatus, a tank, a compartment in the tank opening out through the front side of the tank, the horizontal and vertical dimensions of the compartment being smaller than the corresponding dimensions of the tank, door means closing the open side of the compartment, a bracket secured to a wall of the compartment, an electric pump mounted upon the bracket, a pipe extending from the bottom of the tank through the bottom of the compartment to the inlet of the pump, a pipe extending from the outlet of the pump through the top of the compartment, a gauge located in the compartment at the top thereof, a pipe connecting the gauge with the outlet of the pump, a dial for the gauge exposed exteriorly of the compartment, a pair of plates removably secured to the tank having coacting half rounded openings receiving said dial, hinge means securing one end of said bracket to a wall of the compartment, removal of said plates permitting the bracket to be swung outwardly to the exterior of the compartment and carry the electric pump and the gauge therewith as a unit into position for inspection and repairs, and a removable union mounted on the intake pipe of the pump adapted to permit the intake pipe being disconnected to permit the bracket being rocked outwardly of the compartment.

MARTIN J. BEALE.