March 19, 1957 G. MEYER-JAGENBERG ET AL 2,785,610

APPARATUS FOR ASSEMBLING, IMPREGNATING AND DELIVERING CONTAINERS OF PAPER, CARDBOARD OR THE LIKE CARTON FORMING MATERIAL

Filed May 27, 1955 4 Sheets-Sheet 1

Fig. 1

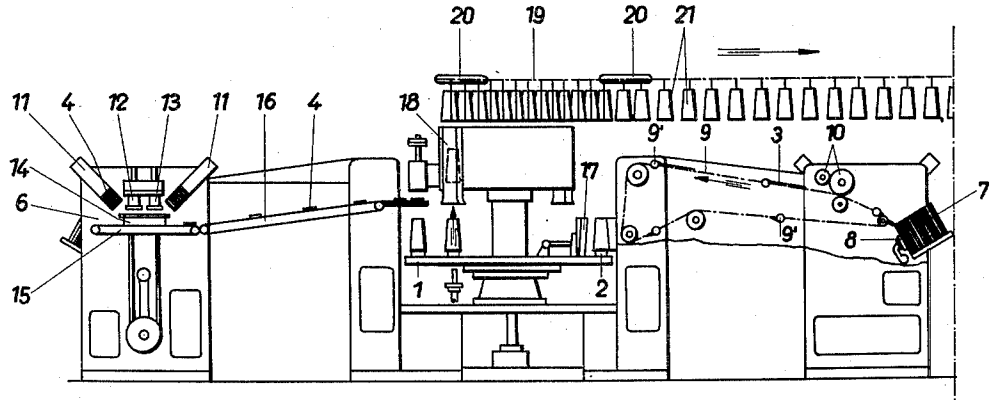

Fig. 1a

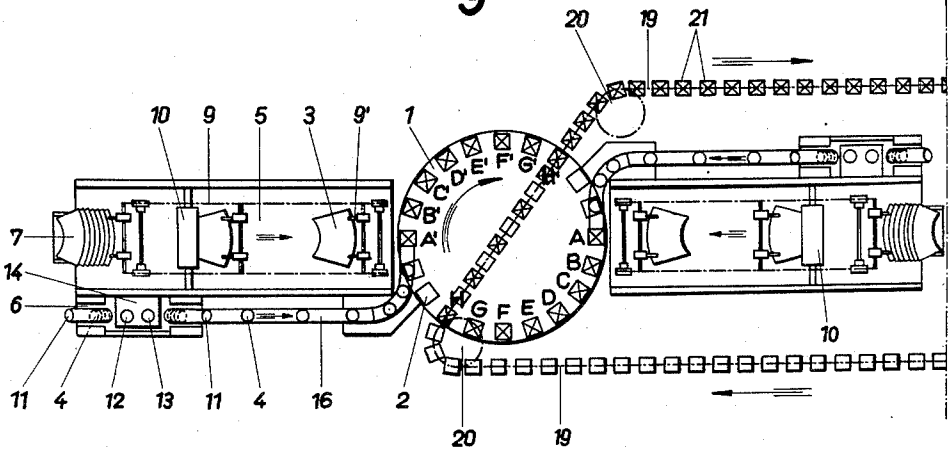

Inventors

G. Meyer-Jagenberg

W. Drese

H. Zerlin

By Glascock Downing & Seibold

Attys.

March 19, 1957 G. MEYER-JAGENBERG ET AL 2,785,610

APPARATUS FOR ASSEMBLING, IMPREGNATING AND DELIVERING CONTAINERS OF PAPER, CARDBOARD OR THE LIKE CARTON FORMING MATERIAL

Filed May 27, 1955 4 Sheets-Sheet 2

Fig. 2

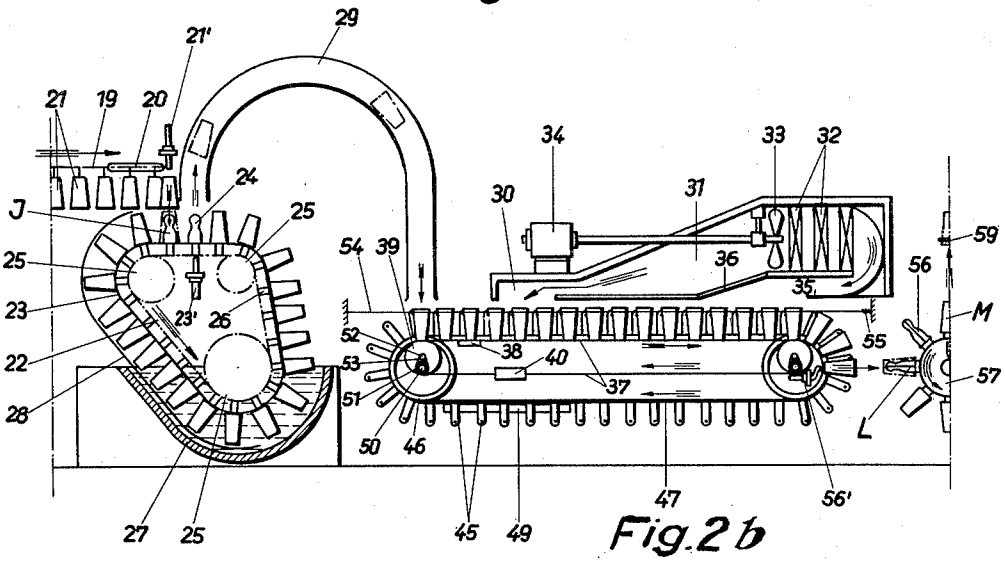

Fig. 2b

Fig. 2a

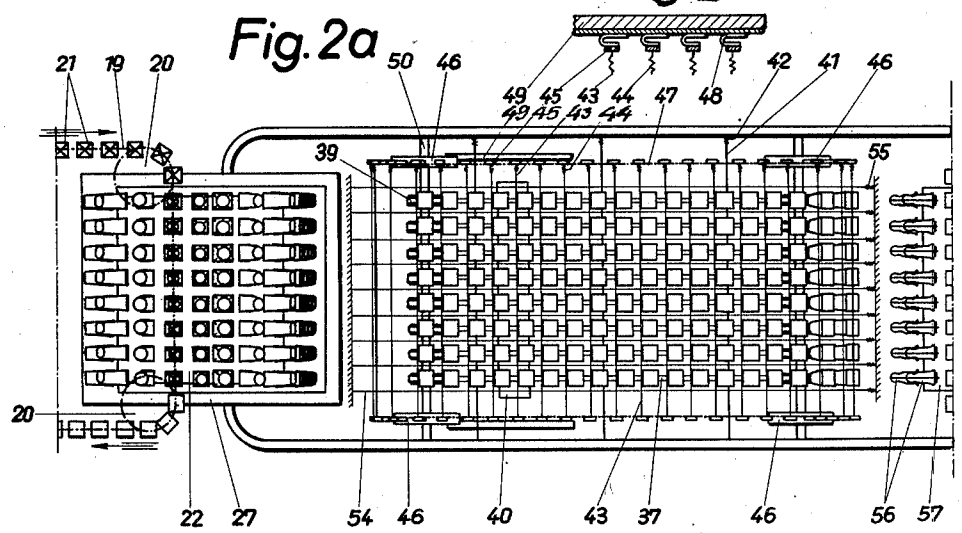

Inventors
G. Meyer-Jagenberg
W. Drese
H. J. Zerlin
By Glascock Downing & Seebold
Attys.

March 19, 1957 G. MEYER-JAGENBERG ET AL 2,785,610

APPARATUS FOR ASSEMBLING, IMPREGNATING AND DELIVERING CONTAINERS OF PAPER, CARDBOARD OR THE LIKE CARTON FORMING MATERIAL

Filed May 27, 1955 4 Sheets-Sheet 3

Fig. 3

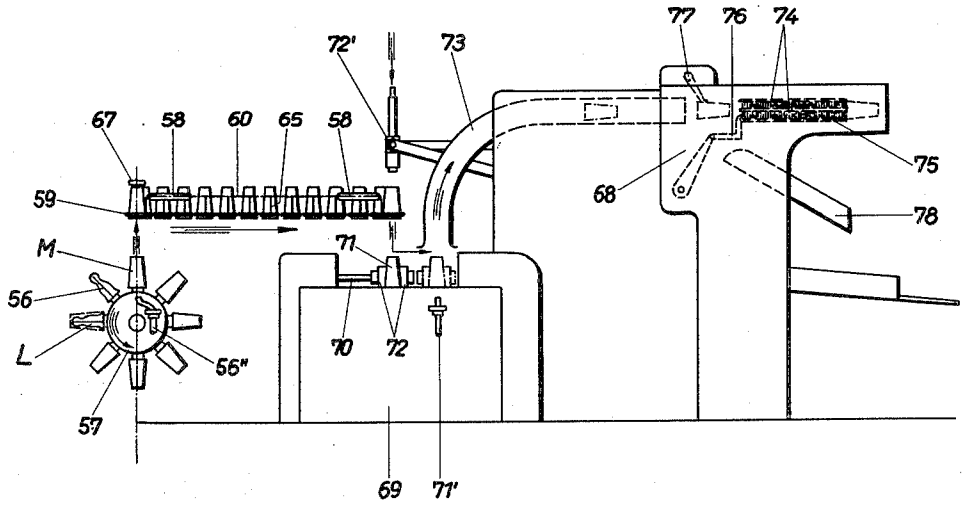

Fig. 3a

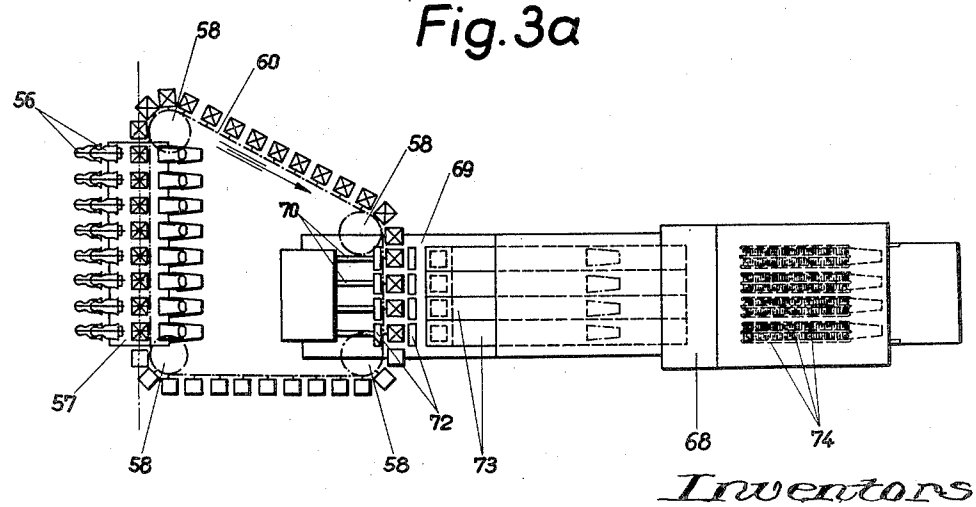

Inventors

G. Meyer-Jagenberg

W. Drese

H. Zerlin

By Glascock Downing Seebold

Attys

March 19, 1957 G. MEYER-JAGENBERG ET AL 2,785,610

APPARATUS FOR ASSEMBLING, IMPREGNATING AND DELIVERING CONTAINERS OF PAPER, CARDBOARD OR THE LIKE CARTON FORMING MATERIAL

Filed May 27, 1955 4 Sheets-Sheet 4

Fig. 4

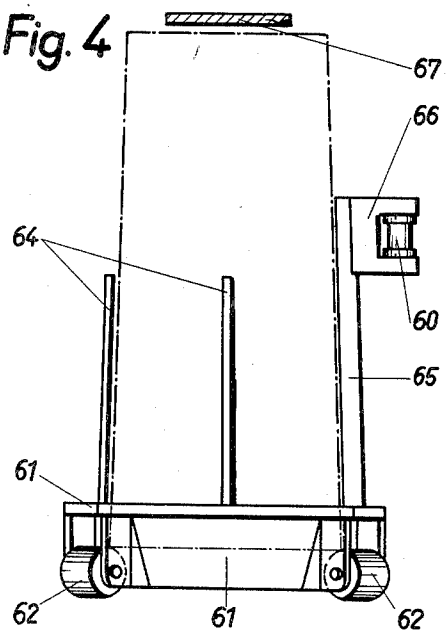

Fig. 5

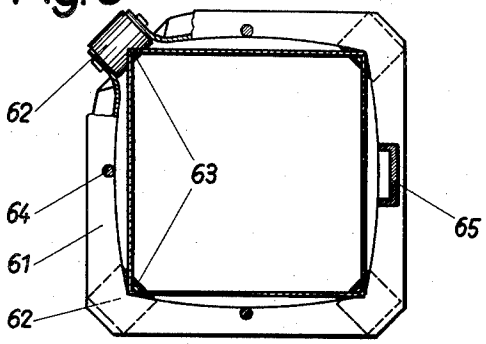

Fig. 7

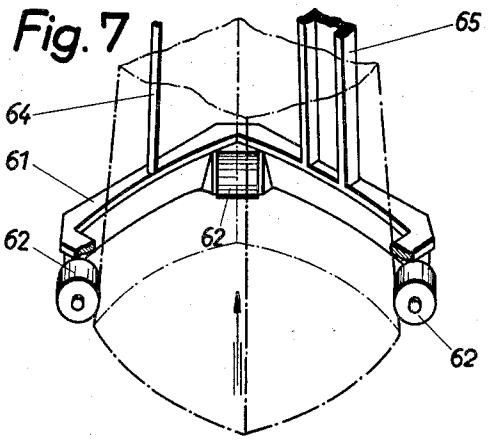

Fig. 6

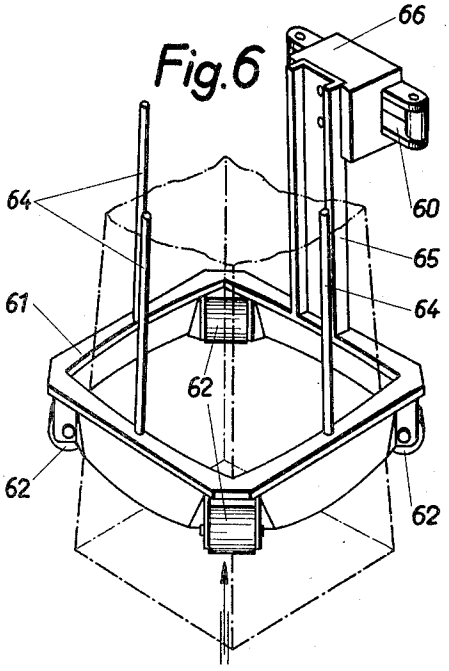

Fig. 8

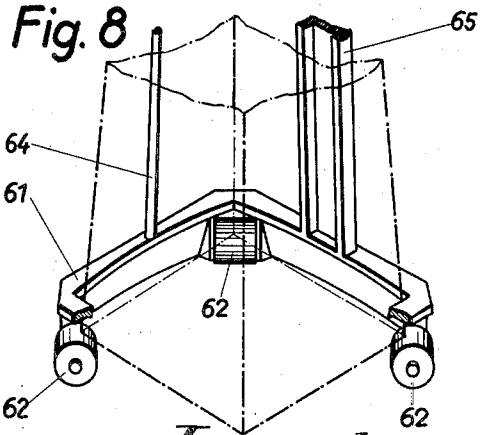

Inventors
G. Meyer-Jagenberg
W. Drese
H. Zerlin
By Glascock Downing & Seibold, Attys.

United States Patent Office 2,785,610 Patented Mar. 19, 1957

2,785,610

APPARATUS FOR ASSEMBLING, IMPREGNATING AND DELIVERING CONTAINERS OF PAPER, CARDBOARD OR THE LIKE CARTON FORMING MATERIAL

Gunther Meyer-Jagenberg, Wilhelm Drese, and Hans Zerlin, Dusseldorf, Germany, assignors to Jagenberg-Werke Akt.-Ges., Dusseldorf, Germany

Application May 27, 1955, Serial No. 511,686

22 Claims. (Cl. 93—36)

The present invention relates to the art of container manufacture.

More particularly, it is concerned with apparatus for assembling, impregnating and delivering containers of paper, cardboard or the like carton forming material.

Still more particularly, this invention is related to an apparatus that is capable of producing and paraffining containers of paper, cardboard or the like carton forming material, which containers are preferably conical, including a tubular body portion and what can be termed a dished bottom.

Apparatus for producing and processing containers are, from a broad standpoint, known developments in the art. Such apparatus are generally composed of a plurality of individual mechanisms which, together, constitute what can be termed a plant. For economic utilization of the various apparatus components of a carton forming and processing plant the construction and operation of any conveying or transfer elements acting upon the cartons is of paramount importance. In this connection it would have to be considered that the efficiency of the various apparatus components, that is, the output per unit of time of one mechanism in the plant is substantially different from the output of another, due to the difference in the manner of operation, such as the erecting of a carton from blank to tubular form as compared with, for example, the time required to impress a fold or score line in the erected container. Thus, to provide economy in operation, the efficiency of the various apparatus components, that is, the respective outputs thereof, requires equalization, it being clear that in a plant in which tubular cartons are assembled from a flat blank and when assembled are immersed in paraffin or other impregnant the latter step requires more time than the assembling steps proper. Therefore, a greater number of containers must be simultaneously immersed and then steps must be taken to ensure of proper coordination of subsequent steps effected by the various apparatus components.

Efforts have been made to solve the problems of equalizing the outputs of various apparatus components. In a known installation containers, after being ejected from the assembling machine, are delivered to an intermediate piling mechanism or installation from which they are delivered by additional conveying means to an immersing roller that conveys plural rows of containers through the bath of paraffin. Disregarding its task of making a transition from a single row conveying path to a plural row conveying arrangement, this intermediate piling installation also is utilized to give the containers coming from the forming machine where they are erected sufficient time, prior to being further processed, for the removal of glue lines. These requirements of the piling installation thus require very expensive mechanism and are of such construction as to be a source of trouble in the operation of the plant. Furthermore, since this prior known installation incorporates an air pressure conduit through which all of the containers are delivered from the

forming machine to the piling mechanism, an additional source of trouble is present in that conveying the containers through a closed air conduit provides an opportunity for containers to bind therein with the resultant problem of curtailing output for the time required to clear any blockages in this channel or conduit. Furthermore, in an arrangement as just described there is no possibility of eliminating any containers which are defective prior to their being subjected to further treatment.

Accordingly, the present invention has for an object to provide a plant for producing and processing containers in which the movement of the containers, starting with the initial blanks through the various stages of erection, delivery, impregnation, and other treatments, is effected in such fashion as to obtain maximum output as regards the economy and efficiency of operation.

Thus the invention has for a further object to provide an apparatus for continuously converting containers from blank form to erected condition and transferring the erected containers through successive treatment steps for subsequent delivery to a piling installation.

It is a further and more particular object of this invention to provide an improved conveying arrangement for a plant for erecting, impregnating, and further processing contains made of paper, cardboard or the like carton forming material.

Accordingly, in accomplishing these objects the apparatus includes an erecting station incorporating a rotary turntable with which is embodied shaping mandrels, and coordinated with the turntable at least two delivery mechanisms for delivering body forming and end closure forming parts to two spaced areas of the peripheral path of travel of the turntable, the delivery mechanism simultaneously supplying body and closure parts to the turntable, the turntable and shaping mandrels moving these parts past the tools which shape the blank parts and unite them in the form of a finished container. After the containers, being erected, have moved through a part of the circumference or of the peripheral path of the turntable a pair of containers is simultaneously ejected at two other areas of the peripheral path. Since the ejection of finished containers in this fashion, that is, simultaneously at two spaced areas on the turntable, necessitates what might be termed two conveying devices for delivering the ejected containers to further processing steps, the present invention provides a particular improvement for combining the dual delivery paths into a single row conveying path.

Accordingly, above the turntable of the erecting or carton forming station, a single row endless conveyor is arranged which simultaneously receives the two containers being ejected from the turntable at spaced portions of its peripheral path. This single row of containers is in the form of what can be termed a bucket or cell conveyor which is moved intermittently across the top of the turntable in a path that coincides with the two delivery portions of the turntable path. The movement of the bucket or cell conveyor is intermittent and is effected in such fashion that from the first delivery area of the turntable every second cell or bucket of the conveyor receives a carton while from the second delivery area of the turntable path the intervening cells or buckets receive cartons.

The arrangement can also be effected in such fashion that more than two feeding stations are associated with the turntable so that body and bottom parts are supplied to the turntable. Consequently, there will be a larger number of delivery areas and thus the conveyor above the turntable will be moved intermittently by several steps corresponding to the number of the delivery stations in the path of travel of the periphery of the turntable.

As indicated, the conveyor that is associated above the turntable with the cell or bucket chain arrangement is guided over sprockets. The buckets or cells widen downwardly and the containers are delivered from the turntable by air under pressure with their narrow bottom parts uppermost. The buckets or cells are of such size in relation to the size of the containers that the containers are held in place in the cells by friction and thus by what can be termed clamping action.

This single row conveyor, which is intermittently moved for carrying containers away from the forming machine, delivers the containers to the paraffining installation. This installation includes a continuously moving plural row conveying mechanism for moving a plurality of containers through a paraffin bath. Accordingly, the single row conveyor is guided above the paraffin installation in a path that is perpendicular to and thus crosses the path of movement of the conveying mechanism for the paraffin installation. Where the paths cross, that is, where the single row conveyor crosses the plural row conveyor, a plurality of containers corresponding in number to the number of rows in the plural row conveying mechanism are simultaneously transferred from the intermittently moving single row conveyor to the continuously moving plural row conveying mechanism.

During the course of further treatment of the containers subsequent to the paraffining thereof, that is, the drying and cooling of the finished containers, plural row conveying arrangements are utilized with suitable transfer mechanisms transferring groups of containers from one plural row conveying arrangement to another. After plural treatments involving handling plural rows of conveyors, an intermittently moved single row conveying mechanism is mounted to cross the path of movement of the last plural row conveying structure for receiving the containers and delivering them to piling arrangements, the intermittent motion of this last conveyor including as many steps as there are piling devices and the transfer of the containers from this last single row conveying device to the piling devices being effected indirectly at an intermediate step wherein the containers are provided with a groove or fold line for subsequent cooperation with the other closure.

As mentioned above, following the installation where the containers are immersed in a bath of paraffin is a station wherein the containers are to be cooled in order that the paraffin can solidify. The movement of the conveyors through the cooling station or zone creates substantial difficulties as regards the mechanism that carries and moves the conveyors through the zone, inasmuch as such mechanisms should not damage the paraffin coating which has not yet hardened. Moreover, the paraffin has a tendency to accumulate on conveying structures in the cooling zone and such accumulation is undesirable. Additionally, the conveying mechanism in the cooling zone must be such that the containers during transport through this zone are maintained in such position that they cannot turn about their longitudinal axes.

Accordingly, this invention has a specific object to provide a conveying arrangement for conveying paraffined containers through a cooling zone which is capable of conveying the containers in such fashion as to minimize and prevent damage to the paraffin coating, prevent accumulation of paraffin deposits on the adjuncts of the conveying devices that contact the containers, and incorporates means for preventing the containers turning about their longitudinal axes. In accomplishing this object the container mechanism that carries, guides and advances the containers through the cooling zone is constituted by wires or cords. Such wires or cords can be permanently or temporarily heated wires.

Such a structure has several advantages. First of all, due to the use of relatively thin wires or cords, there is a mere insignificant surface contact with the paraffin coating. Undesired accumulations of paraffin on these wires

or cords cannot occur since they are permanently or temporarily heated whereby any paraffin that might tend to accumulate is melted off, and the wires or cords are so arranged as to convey containers in upright condition and prevent their turning about their longitudinal axes.

Specifically the invention provides an arrangement in which containers having a round or square cross section are deposited in upright position upon moving supporting cords guided in pairs. Coordinated therewith are moving transversely arranged wires advancing at the speed of the supporting cords. For lateral guidance on both sides of the containers, fixed guide wires are arranged extending in the direction of movement of the containers so that, in effect, wire cells are formed which receive the containers. Since the containers preferably have a round bottom and a square top, the cells are so arranged that while compulsory contact of the guide wires and the transversely arranged conveying wires do not necessarily contact the containers these wires are spaced alongside one another and behind one another in such relation that the containers cannot turn about their longitudinal axes.

As a further measure, and in order to prevent the pairs of cords or wires that carry the containers, that is, the supporting wires or cords, from breaking fixed bracing wires are mounted transversely of the line of movement of the supporting wires. If it is desired to increase the distance from the bracing wires to the supporting wires the bracing cords or wires can be provided with thickened portions adjacent the supports that are crossed by the moving supporting cords or wires. The wires or cords are electrically heated in such fashion that the fixed longitudinally arranged wires and the fixed transversely extending bracing wires are permanently heated while the supporting cords and the movable transversely extending, so-called carrying wires are heated only during a portion of their path of movement in order that in this portion of their movement any deposit of paraffin is melted off.

The advantages of this conveying arrangement in the cooling zone include, first of all, the prevention of accumulations of paraffin by utilization of heated guiding and conveying elements and the advance of the containers through the zone with a minimum surface contact between the conveying components and the containers. A further advantage of the invention is apparent from the fact that the conveying device for the cooling zone can be constructed at low cost and of light weight structural parts.

The treatment of the conveyors leaving the cooling zone presupposes that they are turned by 180°, that is, inverted, so that the bottom is directed upwardly and the open end downwardly. In this position, then, the containers are delivered to a conveying mechanism which carries them to a further station for preparing for the end closure and final piling. This last-mentioned conveying mechanism must likewise satisfy the same demands as regards careful handling in order to prevent damage to the paraffin coating. The fact that the containers are advanced with their open ends downward makes necessary the provision of special measures as regards the construction of the conveying mechanism. For this purpose a plurality of bracing elements are provided for abutting the container walls and in such arrangement that they have corners which project into the surface determined by the large open end of the container. The arrangement is such that these elements are constituted as freely rotatable rollers carried by a frame that surrounds the container. The dimensions of the frame are such that its inside dimension is somewhat larger than the large open end of the container. By this arrangement, when the container is introduced into the frame it is subjected adjacent its largest end to a deformation during a brief interval. This deformation is compensated for by the inherent elasticity of the material of the container so that after passage through the opening, the cross

section of which is determined by the bracing elements, the open end of the container is supported on the rollers. The advantage of this arrangement resides in the fact that the container contacts the bracing elements for a short time only and at an insignificant contact area, since these elements, that is, the rollers, are arranged adjacent the corners of the containers and thus there is a mere line contact extending over a short area of the container.

A further feature of the invention resides in embodying a plurality of holding pins on the supporting frame of this last-mentioned conveyor. These holding pins extending throughout a part of, or, if desired, the entire length of the container, are arranged substantially parallel to the walls of the container and spaced slightly outwardly therefrom. One of these holding pins is constructed as the fastening component which secures the container holding part of this last-mentioned conveyor to the carrying chain or the like. The holding pins prevent the container, supported at its lower end on the rollers, from turning about its longitudinal axis, the spacing of the holding pins from the walls of the container ensuring that the pins will not abut the walls of the container during transport thereof and thus damage the paraffin.

Further and more specific advantages and objects will be apparent from the accompanying drawings illustrating an embodiment of the invention, in which:

Figures 1 and 1*a* illustrate diagrammatically in side elevation and top plan, respectively, that portion of the apparatus in which erected containers are produced from a flat blank and conveyed to an impregnating zone;

Figures 2 and 2*a* illustrate in elevation and top plan views, respectively, and diagrammatically, that portion of the apparatus in which the containers are impregnated and cooled and dried;

Figure 2*b* is a fragmentary cross-sectional view illustrating on an enlarged scale a detail of the apparatus shown in Figure 2*a*;

Figures 3 and 3*a* illustrate diagrammatically in side elevation and top plan, respectively, that portion of the apparatus in which the containers are subjected to depressing or grooving for the later formation of a folded closure, and including mechanism for piling and ejecting the containers;

Figure 4 is a vertical cross sectional view on a large scale illustrating the container receiving cell utilized for moving the conveyors from the cooling zone;

Figure 5 is a horizontal cross sectional view of the cell shown in Figure 4;

Figures 6, 7 and 8 are fragmentary perspective views diagrammatically illustrating the insertion of a container in the cell and the supporting thereof after insertion.

As illustrated in the drawings, the carton forming or erecting component is constituted of a known rotary turntable **1** equipped with shaping mandrels. This turntable is moved intermittently step by step. At the path of movement of the periphery of the turntable at positions denoted at A and A', respectively, are supply positions at which are delivered body parts 3 and bottom parts 4, these parts being delivered to the vicinity of the shaping mandrels. To each of the stations or positions A and A' are coordinated forwarding mechanisms denoted generally at **5** and **6** which prepare and deliver body parts and bottom parts **3** and **4**, respectively as described in our prior German Patent No. 609,961. The mechanism **5** for delivering the body parts includes a chute or piling device **7** in which are stacked flat body blanks **3**. The flat blanks are individually moved by known swinging suction transfer members **8** and delivered to conveying chains **9** and grippers **9'** for movement along a path through a coating mechanism denoted at **10**, wherein the blanks receive strips of adhesive for use in forming the longitudinal and bottom seams in the container. The gripping elements **9'** carry the body blank **3** to the stations A, A' and dispose them vertically in front of the shaping mandrels **2**, about which the blanks are laid by means of known and not illustrated shaping tools. The body blanks are glued together in tubular form about the mandrels at stations A and A'. Also at these stations the dished shaped body parts **4** are supplied and inserted by suitable tools, the bottom being of the type that is an inserted bottom closure. Thus it is fit into the round bottom end of the container which, in finished form, has a round bottom and an upper portion that widens into a square mouth. The dished shaped bottom parts initially are in the form of round flat blanks supported in supply magazines **11** of feeding arrangement **6**. The round flat blanks **11** are transformed by heated dies **12** and **13** and a tubular matrix **14** into the dished shaped bottom **4**, as described in our prior U. S. Patent No. 2,088,847. A conveyor arrangement **15**, **16** delivers the bottom parts to the stations A or A', respectively, at which stations the bottoms are inserted into the tubular body **3**.

During the further intermittent advance of the turntable **1** the shaping mandrels **2** arrive in the region of operation of the tools which perform the folding, pressing and compressing of the mandrel and bottom parts together as described in our prior German Patent No. 609,961 and in so doing the turntable passes through stations B to G or B' to G', respectively, until the containers at the end of their partial travel with the periphery of the turntable arrive at delivery or takeoff stations H or H'. During this circular path the containers are pressed by pressing elements **17** for pressing of the longitudinal seam, the elements **17** pressing the body of the container against the shaping mandrel **2**. At stations H and H' the finished containers are ejected by compressed air blown by the air pipe **18'** through the shaping mandrel **2** with the air pressure applied against the bottom **4**. The containers lifted up from the stations H, H' pass through a short tubular guide channel **18** and are transferred to a conveying device **19** which conveys the containers to the other apparatus components for further processing.

The conveyor device **19** is constituted by an intermittently advancing chain mounted above the turntable **1** and trained about sprockets **20**. The chain is provided with open ended buckets or cells **21** which are of conical form and widen in the downward direction. The cells receive the containers from the tubes **18**. The endless conveyor **19** is so guided that it crosses the two takeoff stations H and H'. The intermittent movement of the conveyor **19** continues for two stations so that at station H each second bucket or cell **21** is charged with a container while the intervening bucket receives a container ejected at station H'. The cells or buckets **21** are so constructed that their inner width is somewhat smaller that the exterior dimensions of the container so that the containers are held in the cells by friction and thus with a clamping force. The conveyor **19** in its continued movement carries the containers to the vicinity of the paraffining installation **22**. This installation is constituted by a vat containing the paraffin and through which is moved a plural row chain conveyor device **23** equipped with a plurality of prongs **24** that receive the containers. The arrangement of the chain conveyor **23** is such that two parallel chains trained around sprocket wheels **25** are connected by cross members **26** which carry the prongs **24**. Across the upper path of travel of the conveyor **23** the intermittently moving conveyor **19** is guided to move perpendicularly to the continuously moving chain conveyor **23**. At station J a number of containers corresponding to the number of prongs extending transversely in a row between the conveyor chains are delivered by pneumatic means denoted at **21'**. This number of containers is transferred simultaneously to the prongs of the chain conveyor **23** which, in its continued movement, dips the containers into the liquid paraffin in tub **27**. Alongside and through the tube **27** is a guide rail **28** which prevents the containers from being

stripped from the prongs 24. Thus, this guide rail extends substantially parallel to the circumferential path of the bottoms of the containers. After the containers have been immersed by passing through the paraffining installation they are ejected from the upper run of the conveyor 23 by air pressure means denoted at 23' and are blown through an air pressure channel 29 into the cooling and drying installation denoted at 30. In this installation the coating of paraffin is dried and hardened by fresh air or cold air.

The cooling and drying installation includes a cooling chamber 31 and a conveying mechanism for carrying the containers through this chamber. The cooling chamber has suitable entrance and exit openings. Above the conveying mechanism that extends through this chamber are a plurality of cooling mechanisms 32. Associated with the same is a fan 33 driven by a motor 34 and guide sheets 35 and 36 constraining the air blown by the fan to circulate across the cooling mechanism, and then in a circular path contrary to the direction of motion of the containers being conveyed through the cooling chamber.

The containers delivered from the paraffining installation through eight air conduits 29 arranged side by side are inverted during their passage and are deposited with their bottoms contacting endless supporting cords 37. In order to avoid an excessive load upon the supporting cords, which are preferably made of nylon, when the containers are delivered by air under pressure, bracing plate means 38 are disposed beneath the mouth of the air pressure channel 29 and underneath the supporting cords 37. The endless moving supporting cords 37 are arranged in pairs and trained about grooved shafts 39. Thus, each container is supported on top of a pair of cords 37.

In order to prevent an accumulation of paraffin deposits on the supporting cords 37 the latter on their return run pass through heated ducts 40 wherein the heat melts off any paraffin that has been deposited on the cords 37. Similarly, the bracing or depositing plates 38 are equipped with heating elements in order to prevent an accumulation of paraffin at this point.

Directly beneath the supporting cords 37, in that portion of their path of travel where conveyors are supported, are arranged a series of transversely extending bracing wires 41. These bracing wires 41 are spaced longitudinally of the line of movement of the cords 37 and prevent breakage of the cords and hanging thereof due to the weight of the containers. The bracing wires 41 are suspended from fixed points by tensile springs 42. These wires and springs constitute resistances in an electric circuit and thus the wires 41 are continuously heated. For further supporting the containers during their advancing movement on the cords 37 another movable arrangement of wires is provided. This arrangement includes a series of transversely extending wires 43. These wires also function as resistances and are fastened by tensile springs 44 to strips 45 which are carried by an endless conveyor component 47 trained over suitably spaced pulleys or sprocket means 46. The diameter and rotary speed of the pulley or sprocket means 46 is so selected that the speed of advance of the wires 43 corresponds to the speed of movement of the supporting cords 37. The wires 43 are mounted near the ends of the strips 45 so that these wires are disposed adjacent the upper part of the container and advance the same in cooperation with the supporting cords 37 and also prevent tilting of the containers. Electric current is supplied to wires 43 for the purpose of heating the same and melting off paraffin accumulations during only a short portion of their path of travel. Thus the strips 45 have sliding contacts 48 thereon which establish contact with fixed current carrying rails 49. In a particular embodiment the endless conveyor 47 is a chain conveyor and the components 46 constitute sprocket wheels mounted on shaft 50. A further sprocket wheel 51 on shaft 50 has a chain 53 trained thereover, and which chain is also trained over sprocket 52 for driving the shaft carrying the grooved sheaves 39 over which are trained the supporting cords 37.

For the purpose of providing side guides along the path of travel of the rows of containers there are arranged a plurality of longitudinally extending guide wires 54 which are suspended from fixed points by tensile springs 55 and constitute resistances in an electric circuit so that they are continuously heated. The guide wires 54 are so spaced laterally with relation to the moving transversely extending wires 43 that the arrangement of wires define substantially square frames for receiving and guiding the upper and square ends of the containers.

At the end of this conveyor mechanism which moves the containers through the cooling zone is mounted a continuously rotating drum equipped with plural rows of prongs. This pronged drum cooperates with the delivery end of the cooling zone conveyor so that the containers leaving the cooling zone conveyor station L are ejected by air pressure means, denoted at 56', upon the rows of prongs on the drum 57. In the further rotation of the drum 57 the coated and cooled containers arrive at station M. At this station the containers, now having their bottoms directed upwardly, are delivered to a single row conveyor that has a portion of its path extending above the drum parallel to the axis thereof and perpendicular to the line of movement of the drum. This last-mentioned single row conveyor includes a chain 60 trained around sprockets 58 and moved intermittently. The chain 60 carries frames for receiving the containers. These frames are denoted generally at 59 and are, in effect, holding rings. The delivery of containers from the prongs 56 to the holding rings 59 is effected by air pressure means, denoted at 56'', so that a plurality of containers corresponding to the number of prongs in a row on the drum 57 are simultaneously introduced into a corresponding number of holding rings 59 carried by the chain 60.

The holding rings 59 consist essentially of a frame 61 (Figures 4 to 8). The inner width of this frame is somewhat wider than the large open end of the container, as clearly shown in Figure 5. Adjacent the corners of the frame are freely rotatable rollers 62 which, as is clear from Figure 5, are arranged so that a portion of their periphery 63 projects across the corners defined by the open and square mouth of the container.

Frame 61 is further equipped with a plurality, in this case four, holding pin means. Three of these holding pins 64 are of simple pin constructions, while one of them 65 serves simultaneously as a component for fastening the frame to the holding device 66 connected with carrying chain 60. The holding pins 64, 65 have a length corresponding to about one-half the length of the container and are arranged on the frame 61 so as to be slightly spaced from and substantially parallel to the walls of the container, denoted diagrammatically at X. The manner of operation of the holding and conveying device is as follows:

Starting from the position shown in Figure 6, the container is inserted, by the not shown pneumatic means, with its smaller end into the frame 61. During the last portion of movement of the container relative to the frame the corners at X' at the open mouth of the container bear against the portion 63 of the bracing roller 62. Thus, as in Figure 7, a cross section of the container is temporarily deformed adjacent the open end. The upward movement of the containers is limited by a fixed stop plate 67 supported above the axis of the drum 56. At this point, that is, the engagement of the bottom of the container with the stop plate 67, the open end of the container has been deformed and moved past the rollers 63 and due to the elasticity of the material of the container the walls thereof assume their original form. The container now drops

down so that its corners bear on top of the portion 63 of the roller 62.

In order to remove the containers from the confines of the holding rings 59 it is only necessary to impart a slight downward pressure onto the bottom of the container so that the container is again momentarily deformed adjacent its corners in moving past rollers 62, but after the slight pressure has been exerted the container drops by its own weight.

The continued movement of the conveyor chain 60 arranges the conveyors in a single row above an impressing device denoted generally at 69, which is mounted in front of the piling mechanism 68. The impressing device provides as described in our prior U. S. Patent No. 2,061,967 the upper margin of the container with groove or fold lines whereby the later formation or assembling of the end closure is faciliated. The impressing device is constituted by a group of plungers 71 which are moved to and fro on guide rods 70. These plungers cooperate in a known manner with profile pressing jaws 72. The motion of the containers out of the holding rings 59, and thus the delivery from conveyor chain 60 and the positioning on the impressing plunger 71, is effected by a movable ejecting bar denoted at 72'. The impressing step is effected during lateral displacement of plunger 71 and pressing jaw 72 to the right. At the end of this lateral displacement of the group of impressing tools the group of containers is disposed beneath ducts 73 through which the containers are blown by the air pipes 71' to the piling mechanism 68.

Within the piling mechanism 68 is a group of similar independently operating devices which collect and eject as described in our prior German Patent No. 669,908 a certain number of containers, in this instance groups of 25. The finished containers are delivered in nested form as a column. The containers leaving the air pressure channel 73 initially contact a guide track bounded by three fixed strips 74 and a bracing strip 75. The containers are advanced through these strips by reciprocating pushing means 76. In the path of motion of the containers between the exit end of the ducts 73 in the end of the track bounded by the guide strip 74 and bracing strip 75 is a contact feeler 77 extending into the path of motion of the containers and which feeler, in connection with a suitable counting mechanism, initiates movement of bracing strips 75 after twenty-five containers have been delivered. The movement of the bracing strip 75 is such that the column of twenty-five nested containers drops downwards from the guide track onto delivery chute 78 from which the column slides into a suitable receptacle.

Therefore, the present invention provides an apparatus for producing and paraffining or otherwise impregnating or treating containers made of paper, cardboard or the like. The containers have an inserted bottom closure, as set forth in prior filed applications Serial Nos. 419,442, filed March 29, 1954; 483,952, filed January 25, 1955; and 503,558, filed April 25, 1955, and at the last station, prior to stacking, the upper portion of the walls of the container is preferably provided with an annular groove for facilitating the assembly of the top structure in the manner set forth in prior filed application Serial No. 503,558, filed April 25, 1955, and entitled "Liquid-Tight Containers of Paper, Cardboard or the Like Carton-Forming Materials." Thus, the invention comprehends an arrangement in which plural feed paths of separate bottom and body blanks converge with the peripheral path of movement of the turntable at spaced points on that path, the turntable carrying shaping mandrels and tools for transforming the separate body blanks and top blanks into a tubular body having an inserted bottom closure, the arrangement being such that the containers are formed in inverted condition. The formation of the containers is effected during intermittent rotation of the turntable so that at spaced points in the path of rotation of the turntable, that are circumferentially spaced from the converging points, the containers have been formed. Above the turntable is a conveying mechanism of the single row type and including container receiving cells. A portion of the path of this conveying mechanism coincides with the two ejecting points in the rotary path of travel of the turntable. The single row conveying mechanism is moved intermittently in synchronism with the intermittently moving turntable so that as containers are ejected upwardly at two spaced ejecting points two cells of the single row conveyor receive the same and hold them by friction. The single row conveyor delivers to the paraffining installation and is so constructed and arranged that it crosses the path of movement of the plural row conveyor that dips containers into a bath of paraffin or other treating material. A plurality of containers is transferred from the single row conveyor to the plural row conveyor. Subsequently, following dipping, a plurality of containers is ejected from the plural row conveyor and pneumatically transferred to another plural row conveyor associated with a cooling zone. The pneumatic transfer means is so constructed and arranged that the containers are inverted into upright condition for travel through the cooling zone. A plural row conveyor, constructed and arranged to maintain the containers upright, moves them through the zone with minimum contact between conveying structure and containers, and which incorporates heated components for preventing accumulation of paraffin, delivers to another plural row conveyor. The containers are transferred from this last plural row conveyor to an intermittently moved single row conveyor which incorporates cells for receiving the containers, again inverted with their bottoms directed upwardly. This last-mentioned single row conveyor transfers the containers to a position above a group of impressing mechanisms that impresses a groove in the upper portion of the container walls. The intermittent movement of this last-mentioned single row conveyor is in steps coinciding with the number of impressing stations. Following impression, the containers are penumatically transferred to a stacking and counting arrangement.

Thus, the invention provides for simultaneously producing a plurality of containers in inverted position with their bottoms directed upwardly, transferring groups of so produced containers, in the instant case two, to a single row conveying mechanism, transferring a group of containers to a plural row conveyor, in this instance the group being transferred being more than two, in the specific embodiment eight, dipping successive groups of containers and successively transferring the groups to a further plural row conveyor for movement of the containers through a cooling zone, transferring the containers to an additional plural row conveyor, and then transferring them to a further single row conveyor constructed and arranged to deliver groups of containers to a group of impressing mechanisms, and finally transferring the containers individually from the impressing mechanism to the counting and stacking mechanisms.

Finally we want to explain how the containers are delivered from the eight row drum to the four row piling mechanism. As described before the containers are carried by single row conveyor which receives eight containers at a time from the drum, delivers however four containers only to the piling station. This is effected by the intermittent motion of the conveyor in such a way, that two intermittent motions are necessary before the eight containers are delivered by the drum, whereas after each motion four containers are transferred by the conveyor to the piling station.

Having thus described the invention, what is claimed is:

1. Apparatus for producing, impregnating, cooling and delivering containers comprising at least two feed mechanisms, each operable to feed in separate paths container body blanks and container bottoms, a rotary intermittently moved mechanism receiving at spaced points in its rotation the body blanks and bottoms from the feed mechanism, said rotary mechanism simultaneously transforming

in successive operations the blanks and bottoms into an inverted container, spaced ejecting stations in the path of travel of the rotary mechanism at which stations at least two containers are ejected, a single row conveying mechanism having a portion of its path crossing the ejecting stations, said single row conveyor receiving the ejected containers, an impregnating installation, a plural row conveying mechanism for dipping containers into the impregnating installation, said first-mentioned single row conveying mechanism having a portion of its path cross the plural row conveying mechanism in a direction perpendicular to its line of movement, means for transferring a number of containers from the single row conveying mechanism to the plural row conveying mechanism and which number corresponds to the number of rows therein, means operably associated with the plural row conveying mechanism for simultaneously ejecting a number of containers corresponding to the number of rows after the containers have been dipped, a cooling zone, means for conveying the ejected containers in plural rows through said zone, the rows corresponding in number to the number of rows in the first-mentioned plural row conveying mechanism, the transfer means simultaneously delivering containers to each row in the second-mentioned plural row conveying mechanism, a transfer station including another plural row conveying mechanism, means for transferring containers by groups from the second-mentioned plural row conveying mechanism to said third-mentioned plural row conveying mechanism, a single row conveying mechanism having a portion of its path crossing said third-mentioned conveying mechanism, means for transferring containers to said last-mentioned single row conveying mechanism, and means at a subsequent position in the path of travel of said last-mentioned plural row conveying mechanism for further processing containers.

2. Apparatus as claimed in claim 1, in which said first-mentioned plural row conveying mechanism and said second-mentioned single row conveying mechanism are constructed and arranged to support said containers in inverted condition.

3. Apparatus as claimed in claim 1, in which said second-mentioned plural row conveying mechanism comprises strand means including movable and fixed strands disposed at vertically spaced levels and defining meshed pockets for receiving, supporting and conveying containers.

4. Apparatus as defined in claim 3, and means for heating the fixed strand means, and means for heating the movable strand means at least during a portion of their movement, so as to prevent accumulation of impregnant thereon.

5. Apparatus for producing and paraffining containers of paper, cardboard or the like carton forming material and which containers are of the type comprising a body and an inserted end closure, said apparatus comprising means for supplying disassociated body and end closure parts to at least two stations, a rotary container forming mechanism disposed to have spaced portions of its rotary path coincide with said stations and constructed and arranged to receive said body and bottom parts and during subsequent portions of its rotary path form them into an inverted container, said subsequent portions of the rotary path including spaced delivery stations, a single row conveying mechanism crossing said delivery stations, a paraffining installation that is spaced from said rotary forming mechanism, means for transferring the containers from the delivery stations to the single row conveyor mechanism, means for delivering the containers to the paraffining installation, said apparatus further including a cooling installation, means for transferring containers from the paraffining installation to the cooling installation, means for conveying containers through the cooling installation including at least one plural row conveying mechanism, and means for transferring and conveying containers to a subsequent treatment station including at least a single row conveyor.

6. Apparatus as claimed in claim 5, in which the rotary container forming mechanism is intermittently rotated, said single row conveying mechanism comprising an intermittently moved endless conveyor, cells carried by the conveyor, said cells being of inverted conical form, and pneumatic means for transferring containers from the delivery stations to the cells wherein they are held by clamping action.

7. Apparatus as claimed in claim 5, in which the paraffining installation includes a plural conveying mechanism, said single row conveying mechanism comprising an endless conveyor having cells thereon for receiving containers from the rotary forming mechanism, said single row conveying mechanism having a portion of its path above the plural row conveying mechanism and extending perpendicular to the line of movement thereof, said plural row conveying mechanism including means for receiving and carrying containers through the paraffining installation, and means for simultaneously transferring a number of containers corresponding to the number of rows in the plural row conveyor mechanism to the receiving means thereof from the single row endless conveying mechanism.

8. Apparatus as claimed in claim 7, in which the endless conveyor is moved intermittently and the plural row conveying mechanism is moved continuously.

9. Apparatus as claimed in claim 5, in which the means for carrying containers through the cooling installation comprise movable and fixed longitudinally and transversely arranged spaced strands constructed and arranged to define open cells for supporting and carrying containers through the cooling installation.

10. Apparatus as claimed in claim 9, and heating means operatively associated with the strands for preventing accumulation of paraffin thereon.

11. Apparatus as claimed in claim 5, in which the means for carrying containers through the cooling installation comprise endless supporting cords guided in pairs arranged with each pair adapted to support a row of containers, transversely extending longitudinally spaced wires, and means for moving the wires in a path above the cords and with the same speed of movement as the cords for advancing the containers and cooperating with the cords in supporting and carrying the containers.

12. Apparatus as claimed in claim 11, and fixed laterally spaced guide wires extending in the direction of movement of the cords and above the same at approximately the level of the first-mentioned wires and cooperating therewith and defining cells to receive the containers.

13. Apparatus as claimed in claim 12, and fixed transversely extending bracing wires disposed in longitudinal spaced relation beneath the upper run of the supporting cords to prevent sagging and breaking thereof.

14. Apparatus as claimed in claim 13, and means for permanently and respectively heating said fixed longitudinally extending and transversely extending wires, and means for heating said cords and said movable transversely extending wires during a portion of their movement.

15. Apparatus as claimed in claim 5, in which the last-mentioned single row conveyor comprises cell structures for receiving containers, the containers being of the type having a substantially square mouth, the transferring means transferring containers to said cell structures in inverted condition, said cell structures including a substantially square frame having dimensions slightly in excess of the dimensions of the mouth, and means at the corners of the frame constricting the frame dimensions in the corners and operative to support the mouth of the containers at the corners only when they are inserted into the cell structures.

16. Apparatus as claimed in claim 15, in which the means constricting the corners comprise freely rotatable rollers having a portion of their periphery disposed inwardly of the corners of the frame so as to underlie the corners of the mouth of the container.

17. Apparatus as claimed in claim 16, in which the frame includes pin means extending upwardly therefrom a distance corresponding to at least half the length of the containers, said pin means being spaced from and parallel to the walls of the containers when it is inserted.

18. Apparatus as claimed in claim 17, in which one of said pin means incorporates means for fastening the cells to the conveyor.

19. A conveying structure comprising at least one pair of endless cords, means for moving the cords in horizontal upper and lower runs, a plurality of transversely extending wires, means interconnecting the wires for movement in horizontal upper and lower runs parallel to and spaced from the runs of the cords, whereby successive objects deposited on the cords are supported by the cords and the wires.

20. A conveying structure as claimed in claim 19, further including fixed longitudinally extending guide wires disposed parallel to the cords above the same and above the transversely extending wires.

21. A conveying structure as claimed in claim 20, and fixed longitudinally spaced transversely extending wires disposed beneath and contacting the upper run of the cords for preventing sagging and breaking thereof.

22. A conveying mechanism for conveying inverted containers having a square mouth, said mechanism including a plurality of cells, means for moving the cells in a single row, said cells comprising a suspended frame, said frame having dimensions slightly in excess of the dimensions of the mouth of the container, and rollers freely rotatably journaled at the corners of the frame with their axes perpendicular to the line bisecting the corners and with a portion of their peripheries extending interiorly of the corners whereby a container inserted in the frame and past the rollers has its side walls deformed by contact of its corners with the rollers until it has passed the same, after which, due to the inherent elasticity of the container walls, it assumes its original shape and the corners of the mouth of the container are supported on the rollers.

No references cited.