D. LEVINSON.

PROTECTING PAD OR ARMOR.

APPLICATION FILED MAR. 6, 1917.

1,253,260.

Patented Jan. 15, 1918.

2 SHEETS—SHEET 1.

Fig. 1

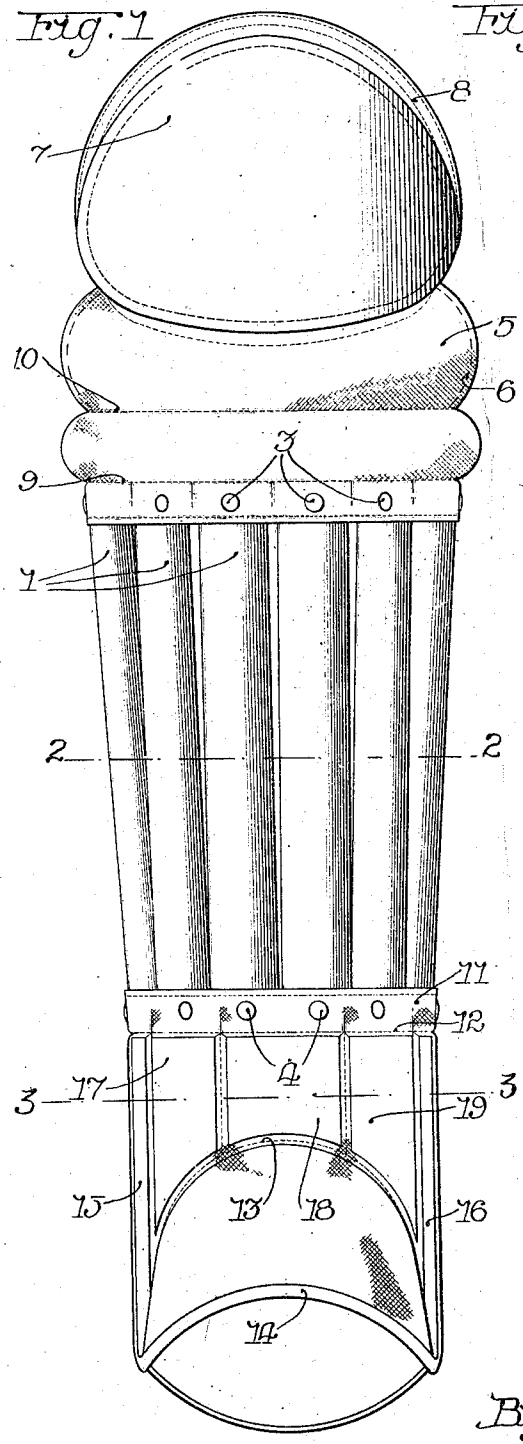

Fig. 4

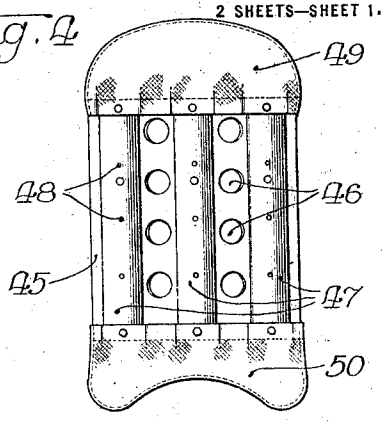

Fig. 2

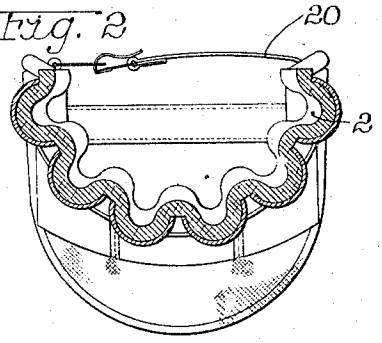

Fig. 3

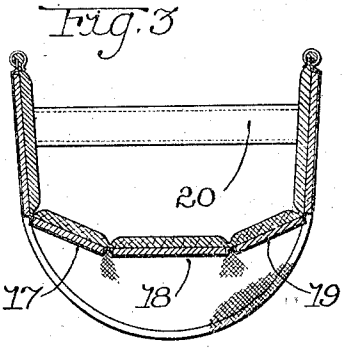

Inventor
David Levinson
By Brown Hanson & Bostwick
Attorneys

D. LEVINSON.

PROTECTING PAD OR ARMOR.

APPLICATION FILED MAR. 6, 1917.

1,253,260.

Patented Jan. 15, 1918.

2 SHEETS—SHEET 2.

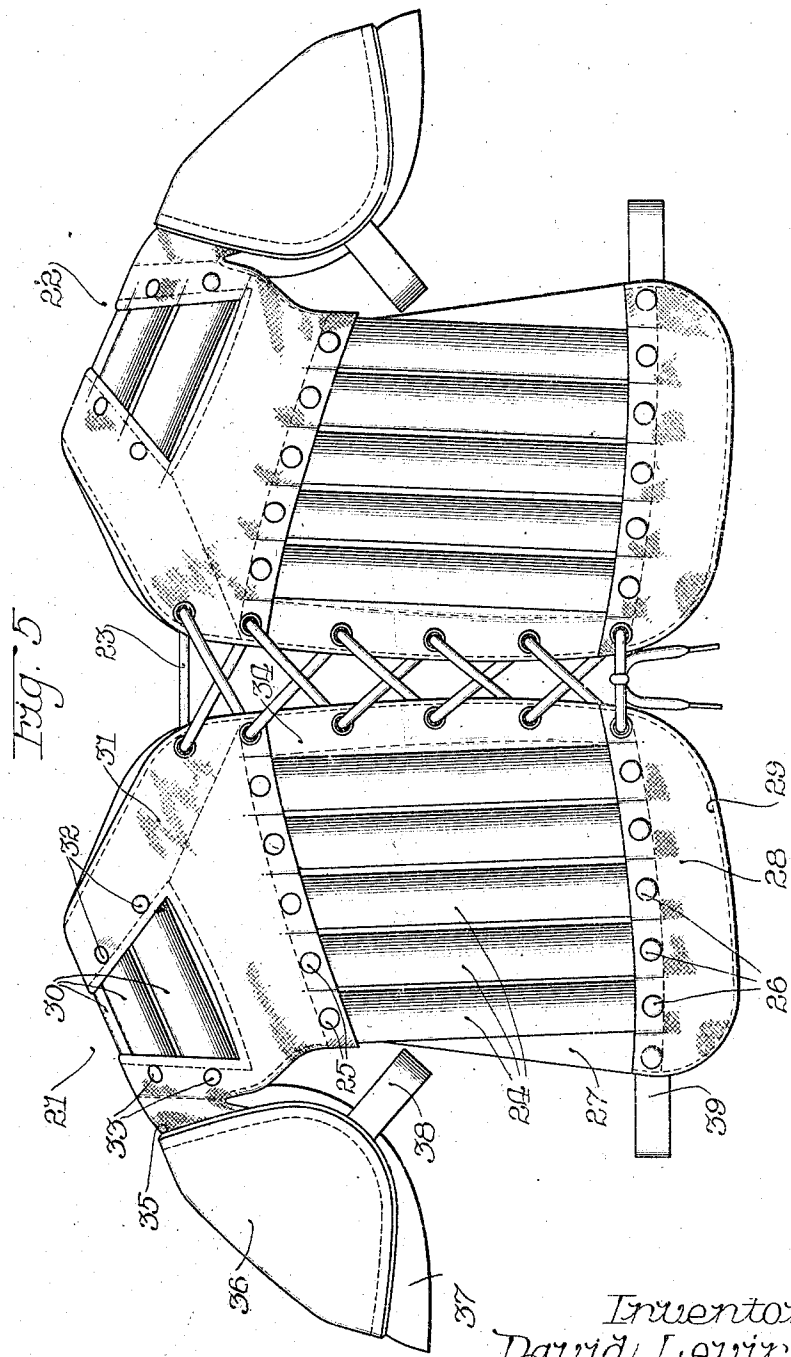

Fig. 5

Inventor
David Levinson
By Brown Hanson & Boettcher
Attorneys

UNITED STATES PATENT OFFICE.

DAVID LEVINSON, OF CHICAGO, ILLINOIS.

PROTECTING PAD OR ARMOR.

1,253,260. Specification of Letters Patent. Patented Jan. 15, 1918.

Application filed March 6, 1917. Serial No. 152,674.

To all whom it may concern:

Be it known that I, DAVID LEVINSON, a citizen of the United States, residing at Chicago, in the county of Cook and State of Illinois, have invented a certain new and useful Improvement in Protecting Pads or Armor, of which the following is a full, clear, concise, and exact description, reference being had to the accompanying drawings, forming a part of this specification.

My invention relates to protecting pads or armor for use in various branches of athletics.

In many athletic activities or sports such as football, baseball, cricket, basket ball, hockey, lacrosse, fencing and the like, some type of protecting pad or armor is used to prevent injury by impact to various parts of the body of the participant.

My invention aims to provide an improved form of pad or armor for such use.

Heretofore such pads have generally been built of a flat fibrous backing and a facing of solid reeds or rods of small diameter secured in pockets or cells in a canvas or duck facing.

The rods or reeds have necessarily been made of small diameter because of their weight and being thus of small diameter they have presented little strength. They tend moreover because of their small diameter, to keep the blow concentrated and to cut the material which they are in contact with, more particularly the canvas facing, and thus wearing out relatively quickly.

In accordance with my invention stays of relatively large size are employed on a fibrous backing without any facing except as may be employed to bind the ends of the stays. The first practical result is a distribution of the blow over a wider area because of the greater stiffness of a large stay. Another desirable result is the relative lowering of the cost of construction and longer life due to dispensing with the facing material.

But my invention goes further and teaches the employment of hollow concavo-convex stays which have their convex sides facing outwardly to receive the blow and their concave sides resting upon the pad to distribute the force of the blow. In practice I form the stays of semi-cylindrical hollow bars of fiber or the like, such as are produced when a round tubular sleeve of fiber is split lengthwise axially.

These semi-cylindrical bars are attached directly to the fibrous pad or backing as by means of rivets or the like through the forwardly projecting part of the bar, the rivets drawing the pad into the hollow portion of the bar.

A number of important results flow from this construction. The construction is inherently lighter and stronger than prior devices. As the rivets pass through the concave portion of the stays the direct attachment of the backing is not detrimental since no blow, even if it struck a rivet squarely, could cause the rivet to transmit the blow to the body of the wearer.

The greater stiffness and greater area of the half round stays distribute the blow over a greater area and consequently decreases the intensity of it. The hollow nature of the stays prevents direct transmission of the blow as the natural springiness of the section permits yielding and consequent diminution of the shock. The pad or armor is more porous because the double thickness of duck heretofore found necessary is dispensed with. Also due to drawing the backing into the hollow side of the stays, a rough corrugation of the backing is produced which does not shut off the air from the part of the body protected and this results in more comfortable wear to the user.

In the accompanying drawings which form a part of the present specification I have illustrated the manner in which my invention may be put into practice.

Figure 1 is a front elevation of a shin guard with the guard section attached;

Fig. 2 is a cross section of the same taken on the line 2—2 of Fig. 1;

Fig. 3 is a section taken across the lower portion of the guard on the line 3—3 of Fig. 1;

Fig. 4 is a front elevation of a ventilated shin guard; and

Fig. 5 is a front elevation of a shoulder harness for football players.

The shin guard shown in Figs. 1, 2 and 3 comprises a plurality of half round hollow stays 1 which have their round convex faces presented outwardly and their rear hollow faces resting upon a backing of felt 2. The felt backing is secured to the stays 1 by means of the rivets 3 which pass through the stays adjacent their ends and which draw the backing into the concave or grooved portion of the stays as is shown in Fig. 2.

Rivets may be attached at other points along the length of the stays if desired. The stays 1 are formed by sawing fiber tubes axially lengthwise so that the resulting parts are substantially semi-cylindrical. It is apparent at once that they may be made more or less than semi-cylindrical and still retain the resilient effect which characterizes them. It is to be noted that the curvature of the stays is in all cases sharper than the curvature of the body surface upon which they are placed.

The upper ends of the stays 1 are covered over by a flexible canvas facing 5 which in this case is joined along its edges as is shown at 6 to the felt backing which extend upward and beyond the ends of the stay 1. The canvas facing 5 in this case is joined to a knee protecting shield 7 which has a felt backing 8 which forms an extension of the main pad 2. The canvas facing 5 is joined to the felt backing underlying the same by a line of stitches such as shown at 9 and 10, these stitches being preferably horizontal in order to render this part of the protector flexible for bending of the knee. The lower ends of the stays 1 are also bound by a suitable facing of canvas 11 secured to the ends of the stays by means of the rivets 4. The felt backing 2 extends down to the bottom of the protector, being joined by a crescent shaped seam 13 at the point where the pad passes over the instep of the wearer and at the lower edge or hem 14 which, in this case is finished with a binding of leather or other tough material. Suitable pockets are formed in the canvas facing below the stays 1 for receiving the cheek pieces 15 and 16 that are formed of flat plates of fiber board and the front pieces 17, 18 and 19 which protect the wearer at the point where the shin and the instep join. The guard is supported upon the leg of the wearer by means of suitable fastening straps 20 attached at various points along the sides of the guard.

In Fig. 5 I have illustrated a shoulder and body protecting pad for protecting the shoulders and thorax of the wearer, as has been found desirable in football. This shoulder harness consists of two similar halves 21 and 22 joined together at front and back by means of the laces 23. A series of substantially vertical stays 24 which are formed, as previously described, of fiber tubes slit axially lengthwise riveted directly as by means of the rivets 25 and 26 to a felt backing 27. A strip of duck or canvas 28 binds the lower ends of the stays 24 and has its lower edge sewed to the lower edge of the felt backing 27, as is shown at 29. At the upper parts of the harness a series of grooved convex stays 30 lie in substantially a horizontal direction over the portion of the harness which protects the shoulder of the wearer. A canvas binding member 31 binds the ends of the stays 30 being secured in place by the rivets 32 and 33 and suitably sewed to the edges of the felt backing 27. A suitable eyelet receiving strip 34 is secured along the inner edge of the felt backing to provide suitable eyelets for the lacing 23. The canvas or duck facing 31 extends over the shoulder as is shown at 35 and forms a flexible attaching means for the shoulder pad 36, this pad being designed to protect the apex or point of the shoulder and consisting of a fiber facing and a felt or other backing 37. Suitable elastic straps 38 serve to maintain the shoulder pad 36 in place upon the shoulders and suitable straps 39 of elastic material hold the front and back portions of each half closely upon the body of the wearer. The padding 27 for both front and back is preferably made of one continuous piece. It can be seen that the stays 24 provide flexible armor for the curvature of the thorax, particularly around the chest and the stays 30 which lie substantially horizontal provide a flexibility over the shoulders because of the different character of the curvature of the body at this point.

In Fig. 4 I have illustrated a ventilated shin guard in which the felt backing 45 is provided with a series of ventilating openings 46. The stays 47 are perforated as shown at 48 by ventilating openings through the side walls of the stays thereby increasing the comfort of the pad to the wearer. This provision of ventilation prevents excessive perspiration and thereby prevents the pad from becoming saturated and heavy. The stays 47 are joined by rivets to the backing 45 and suitable cloth binding 49 and 50 binds the edges of the pads and the ends of the stays. Suitable straps are provided for mounting the pad upon the portion of the body to be protected.

While I have shown specific pads for protecting specific portions of the body, it is to be understood that the invention may appear in a pad or armor designed to protect any particular part of the body. As an example of further forms of pad I wish to point out that the invention has been applied with equal success to the construction of kidney pads, hip pads, thigh guards, hockey gloves and the like.

While I have described my invention with reference to the details of particular embodiment, it is to be understood that the form, dimensions and proportions may be varied as these are not of the essence of the invention.

I claim:

1. In combination, a soft fibrous backing and a plurality of stays of small diameter individually riveted directly to said backing, said stays having each a groove facing said

backing, said grooves being of sharper curvature than the portion of the body to be protected.

2. In combination, a soft fibrous backing and a plurality of relatively stiff concavo-convex stays attached directly to said backing with their concave surfaces facing said backing throughout their entire length, the curvature of said concave surfaces being relatively sharp with respect to the part of the body to be protected.

3. In combination, a soft fibrous backing, a plurality of concave stays of sharper curvature than the portion of the body to be protected lying over said backing with their concave portions facing the backing and rivets fastening said backing into said concave stays, said rivets passing through the concave portion of the stays and lying out of contact with the body of the wearer.

4. In a protecting pad, a soft fibrous backing and a plurality of grooved fiber stays secured directly to said backing with the grooves facing said backing, said backing having perforations intermediate the stays and said stays having ventilating perforations throughout their entire length.

5. In a protecting pad, a soft fibrous backing and a plurality of grooved stays of relatively sharp curvature with respect to the portion of the body to be protected secured to said backing with the grooved faces lying against the backing, binding means covering the ends of the stays and being secured to the edges of the backing, and means for fastening the backing, the stays and the binding means together.

6. In combination, soft fibrous backing adapted to cover a part of the body consisting of surfaces curved in different directions, a plurality of channeled stays on said backing lying substantially parallel in one general direction, a plurality of channeled stays lying on said backing at substantially right angles to first said stays and binding means secured to the ends of said stays and to said backing, said binding means covering the ends of the stays only.

7. In a protecting pad, a felt backing, a plurality of small stiff stays substantially semicircular in form of cross section, fastening means passing through the felt pad and through the stays, said stays having recesses on the back side thereof, and having their curved portions facing outwardly, said fastening means comprising rivets adapted to draw the felt backing into the recesses in the back of said stays.

In witness whereof, I hereunto subscribe my name this 3rd day of March, A. D. 1917.

DAVID LEVINSON.