United States Patent [19]

Burkhard et al.

[11] **3,793,861**

[45] **Feb. 26, 1974**

[54] **TRANSPIRATION COOLING STRUCTURE**

[75] Inventors: **Kurt Burkhard,** Irvine; **Thomas G. Lee,** Anaheim; **John R. Schuster,** Fountain Valley, all of Calif.

[73] Assignee: **McDonnell Douglas Corporation,** Santa Monica, Calif.

[22] Filed: **Mar. 3, 1972**

[21] Appl. No.: **231,619**

[52] **U.S. Cl.** **62/315,** 62/239, 62/467, 244/1, 244/117

[51] **Int. Cl.** **F28c 1/00**

[58] **Field of Search** 62/315, 239, 467; 244/117, 244/1

[56] **References Cited**

UNITED STATES PATENTS

2,908,455	10/1959	Hoadley	62/315
2,941,759	6/1960	Rice	244/117
3,082,611	3/1963	Alvis	62/239
3,138,009	6/1964	McCreight	62/315

Primary Examiner—William J. Wye

Attorney, Agent, or Firm—Robert O. Richardson; Walter J. Jason; Donald L. Royer

[57] **ABSTRACT**

A high surface temperature transpiration cooling structure that substantially reduces coolant requirements is described. It is a dual layer material consisting of a thin outer overlay of a high melting temperature, low thermal conductivity, porous ceramic material of high permeability applied on a thicker sintered metallic substrate of a high strength material of low permeability. A coolant is expelled through this structure and out the heated surface to keep the surface temperature below the overlay melting point. The inner layer controls coolant distribution and the outer layer buffers the inner layer without creating a high back pressure. This structure may be used whenever it may be subjected to a high heating environment.

6 Claims, 3 Drawing Figures

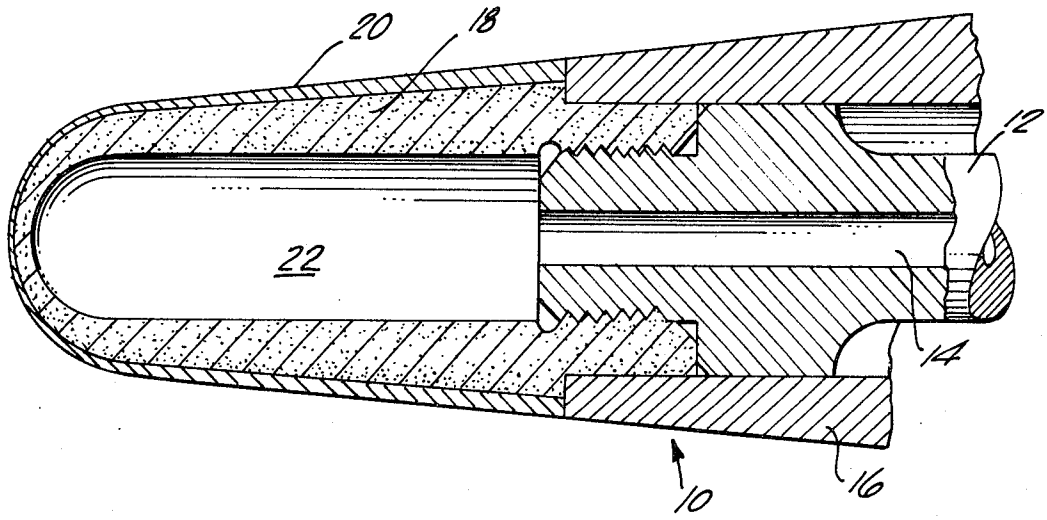

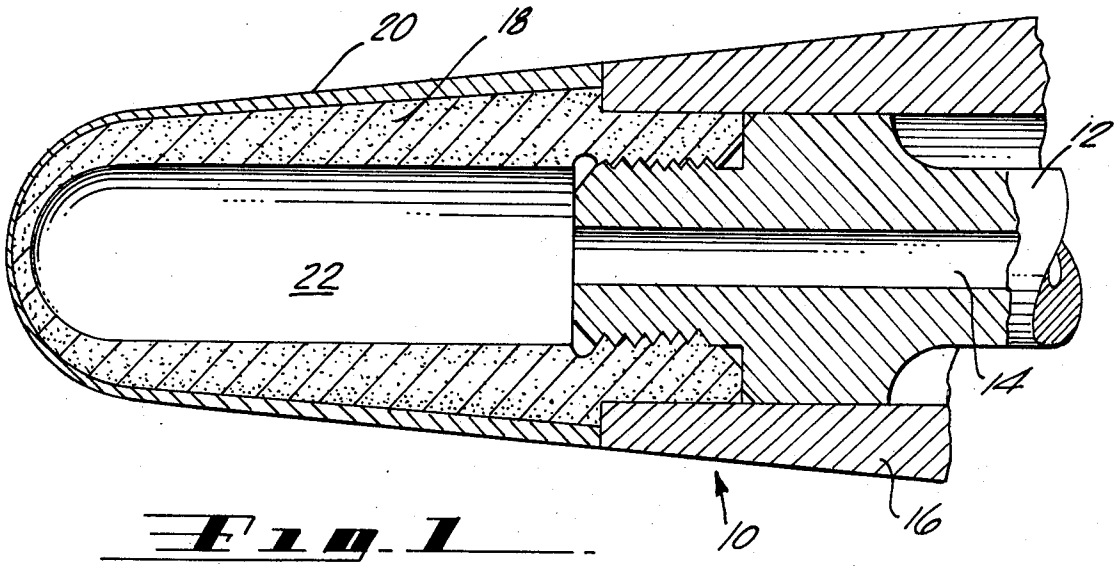

Fig. 1

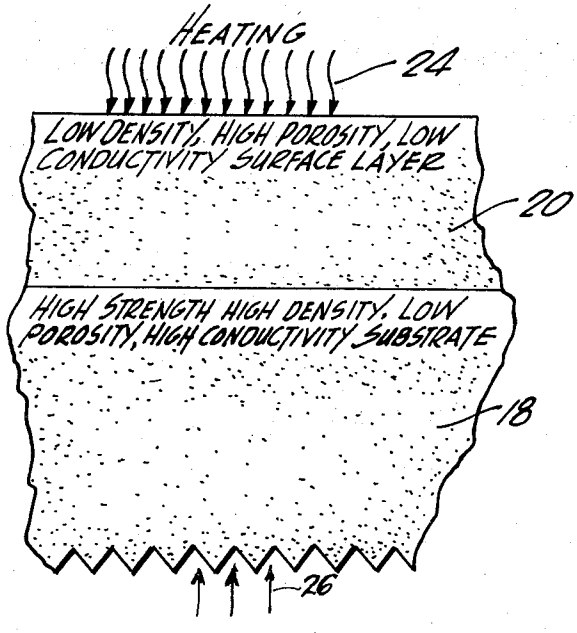

Fig. 2

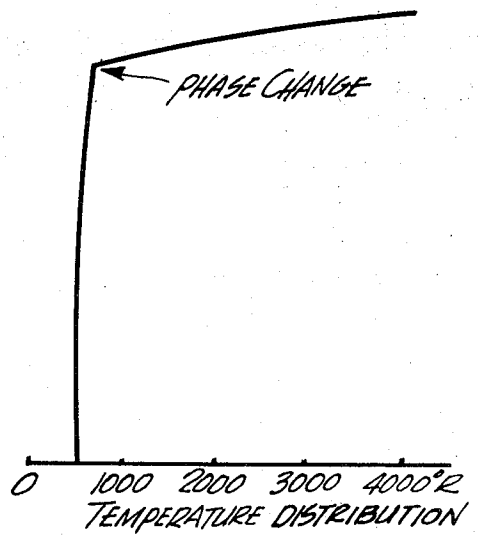

Fig. 3

TRANSPIRATION COOLING STRUCTURE

BACKGROUND OF THE PRESENT INVENTION

Transpiration is the act of excreting a liquid, vapor, or gas through a surface as a means of cooling the surface. This type of thermal protection is particularly desirable in a high heat environment such as experienced by nose cones for reentry vehicles, missile leading edges and nose tips, rocket nozzles and combustion chamber linings, steam and gas turbine blades, and instruments exposed to a high heat flux.

One existing concept of transpiration cooling uses a porous material of a single permeability, or passibility. With this system the fluid coolant must be kept at a temperature below its boiling point within the material. This is because when high surface temperature operation is attempted, coolant tends to divert around regions in which boiling is occurring, allowing "hot spots" to form. The development and propagation of these hot spots eventually leads to a failure because the transpiration cooled surface melts in those areas where coolant flow has been reduced. With this concept, "hot spots" may form regardless of whether the coolant is initially supplied in the liquid or vapor phase. This is because once the coolant is in the vapor phase, its resistance to flow through porous material increases with increasing porous material temperature.

Another existing system allows internal boiling of the liquid without the formation of "hot spots," but is of a single metallic material throughout. This limits the surface temperature to the melting temperature of the metal which in the case of stainless steel is approximately 2300° Fahrenheit. Because of this relatively low temperature, a relatively large amount of coolant is needed.

SUMMARY OF PRESENT INVENTION

Transpiration cooling efficiency can be increased by operating at high surface temperature. For a liquid coolant this implies coolant phase change to vapor within the porous material. Whether the coolant is initially a liquid or gas, operational instability can result at high temperature due to the relationships between coolant viscosity and temperature and coolant density and temperature. This instability problem is avoided, in accordance with the present invention, by the provision of a dual permeability porous structure having an inner layer of material controlling coolant flow and an outer layer buffering the inner layer from high environmental temperature without creating a high back pressure.

The inner layer is a high strength metallic material such as porous sintered stainless steel, and has a relatively low permeability in order to control the coolant flow through the dual layered structure. The outer layer is a high melting temperature, low thermal conductivity, porous ceramic material such as zirconia with a relatively high permeability compared with the inner layer so as to buffer the inner layer from high temperature (beyond its melting point) and yet not develop a high back pressure. A high back pressure could have an adverse effect on coolant flow distribution thus affecting operational stability. As this design concept permits stable operation with high surface temperature, the coolant flow rate can be reduced below what would be required to operate with low surface temperature.

BRIEF DESCRIPTION OF THE DRAWINGS

FIG. 1 is a sectional view of a missile nose tip embodiment;

FIG. 2 is a graphic illustration of the material characteristics taken in section; and

FIG. 3 is a graphic illustration of the temperature distribution of this material.

DETAILED DESCRIPTION OF ILLUSTRATIVE EMBODIMENT

Reference is now made to FIG. 1 wherein there is shown a reentry nose tip **10** comprising a wand **12** having a fluid conductive path **14** therein for a coolant such as water. An ablative heat shield **16** surrounds the wand. The nose tip includes a low permeability, high strength substrate **18** such as sintered stainless steel coated on the outside with a high temperature, high permeability overlay **20** such as zirconia, for example. Substrate **18** has a reservoir **22** to which a conduit **14** passes the cooling fluid. The coolant first passes through the high strength inner matrix **18** where its low permeability meters the distribution of the coolant to the heated surface **20** and its high strength contains the pressure stresses. The coolant then passes into the overlay region **20** where, in the case of liquid, it will boil and expand into a gas and, in the case of gas, will also expand due to the large temperature increase as it passes through this region. Because of the high permeability of the outer region **20,** the density decrease of the coolant and viscosity increase of the coolant with temperature will not have a significant effect on the overall pressure drop between the substrate **18** and the heated surface **20** and therefore will not effect the distribution of flow out the heated surface. Since the distribution of coolant flow is not affected by surface temperature, "hot spots" will not form and propagate as they would without the surface layer.

The overlay **20** in one embodiment may be zirconia although other high temperature materials may be utilized. Zirconia is a ceramic material used to line furnaces in brick or cement form but it is very difficult to fuse. Application with a plasma gun is a satisfactory method in which an electric arc is struck between high temperature electrodes. An inert gas such as argon or helium is passed around the electrodes in order to pick up the thermal energy to heat the gas. The gas temperature is then hot enough to melt zirconia particles, the melting point of which is on the order of 4800°F. The gas stream continues out of the plasma gun with the zirconia powder injected into it and is sprayed onto the work surface. The zirconia powder in the gas stream becomes plastic or putty-like and results in a mechanical attachment to the surface upon which it is sprayed. The substrate **18** may be so shaped and thus adjust the coolant flow rate to keep the surface temperature of the outer layer **20** at a temperature below the melting point of the high temperature outer surface material.

As shown in FIG. **2,** the thin overlay **20** is of a high temperature, low conductivity, porous material of high permeability applied to the thicker substrate matrix **18** of high strength, high density, low permeability, high conductivity material. The purpose of the overlay of material **20** is to act as a buffer region to shield the high strength substrate **18** from the elevated temperature caused by heating shown by arrows **24.** Because of its low conductivity, a very large temperature differential

can be maintained across the overlay **20** during the operation. Due to the permeability differential between the overlay **20** and substrate material **18,** the substrate **18** will have a dominating effect on metering the distribution of coolant **26** out through the heated surface **20,** thus avoiding "hot spots" and subsequent surface melting that could occur without the overlay **20.**

As shown in FIG. **3,** the coolant temperature in the substrate **18** and through most of the outer surface layer **20** remains fairly constant and substantially below the coolant boiling temperature. However, near the outer surface the coolant boils or changes phase and a high temperature gradient is developed, permitting a high surface temperature. This high surface temperature results in less heat being transferred into the surface, therefore requiring less coolant. Additionally, since the coolant exits from the surface at approximately the surface temperature, higher surface temperature results in a greater amount of energy being absorbed per unit weight of coolant. Therefore, less coolant is required to absorb a given amount of heat being conducted from the outside into the surface.

Having thus described an illustrative embodiment of the present invention, it is to be understood that modifications thereof will become apparent to those skilled in the art and it is to be understood that these deviations are to be construed as part of the present invention.

We claim:

1. A high surface temperature transpiration cooling structure comprising a dual permeability material for a coolant passing therethrough,

said material consisting of an outer portion of high melting temperature, low thermal conductivity, porous material of relatively high permeability, and a high strength inner portion of relatively lower permeability.

2. A transpiration cooling structure as in claim **1** wherein said outer portion is an overlay of dissimilar material applied to said inner portion.

3. A transpiration cooling structure as in claim **1** in combination coolant means for expulsion through said material.

4. A transpiration cooling structure as in claim **3** wherein a major portion of coolant pressure drop occurs through said inner portion and coolant flows through said outer portion without a high back pressure.

5. A transpiration cooling structure as in claim **1** wherein said inner portion is a sintered metal, said outer portion is a porous ceramic, and said coolant is a liquid.

6. A transpiration cooling structure as in claim **5** wherein said metal is a sintered stainless steel, said ceramic is zirconia, and said liquid is water.

* * * * *