(12) UK Patent Application (19) GB (11) 2 129 079 A

(21) Application No **8328780**
(22) Date of filing **27 Oct 1983**
(30) Priority data
(31) **3239970**
(32) **28 Oct 1982**
(33) **Fed. Rep. of Germany (DE)**
(43) Application published **10 May 1984**
(51) **INT CL³ B60T 13/26 13/68**
(52) Domestic classification **F2F** BC BE
(56) Documents cited **None**
(58) Field of search **F2F**
(71) Applicant **Robert Bosch GmbH (FR Germany), Postfach 50, 7000 Stuttgart 1, Federal Republic of Germany**
(72) Inventors **Ingolf Grauel, Egbert Muller, Werner Stumpe**
(74) Agent and/or Address for Service **W. P. Thompson & Co., Coopers Building, Church Street, Liverpool L1 3AB**

(54) Improvements in or relating to brake systems for tractor vehicle and trailer combinations

(57) Multi-circuit brake actuation member (3) is constructed to control electrical and pressure-medium-operated circuits (III, I and II). A trailer brake control valve (9) is controlled by circuits I and II of which circuit (II) is a pure control circuit from the brake actuation member for improved response. Electrical circuit (III) is used for the electrical control of pressure-control valves (14, 19) on the tractor vehicle and for the electrical control of the trailer brakes via lead 30. In the trailer, electrical and pressure medium control is simultaneous. In the tractor, the electrical control is predominant via solenoid valves 15, 23. Load sensing and anti-skid control means 26, 27 can be employed. If the electrical circuits fail the brakes are controlled by pressure medium. Other variations of tractor control circuits are described.

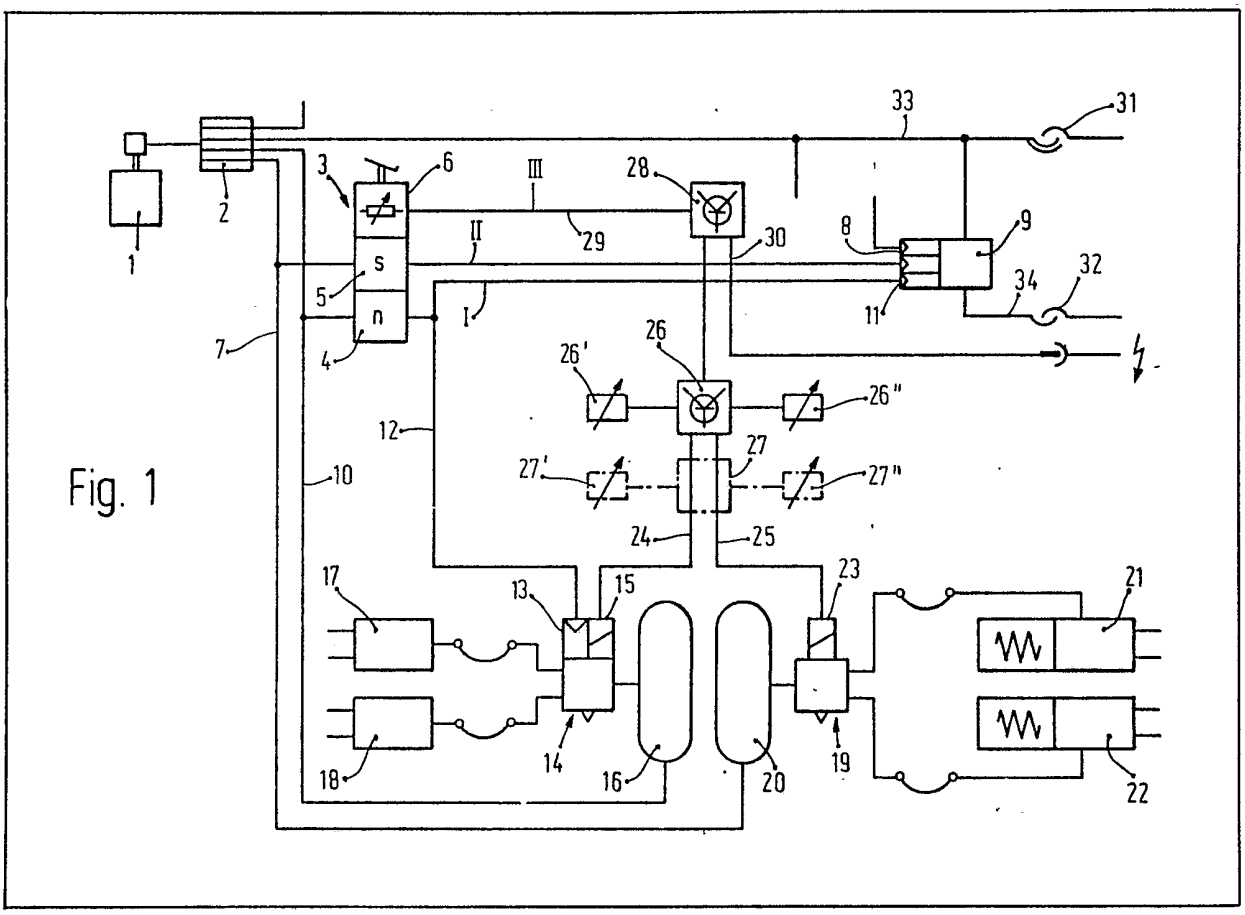

Fig. 1

GB 2 129 079 A

2129079

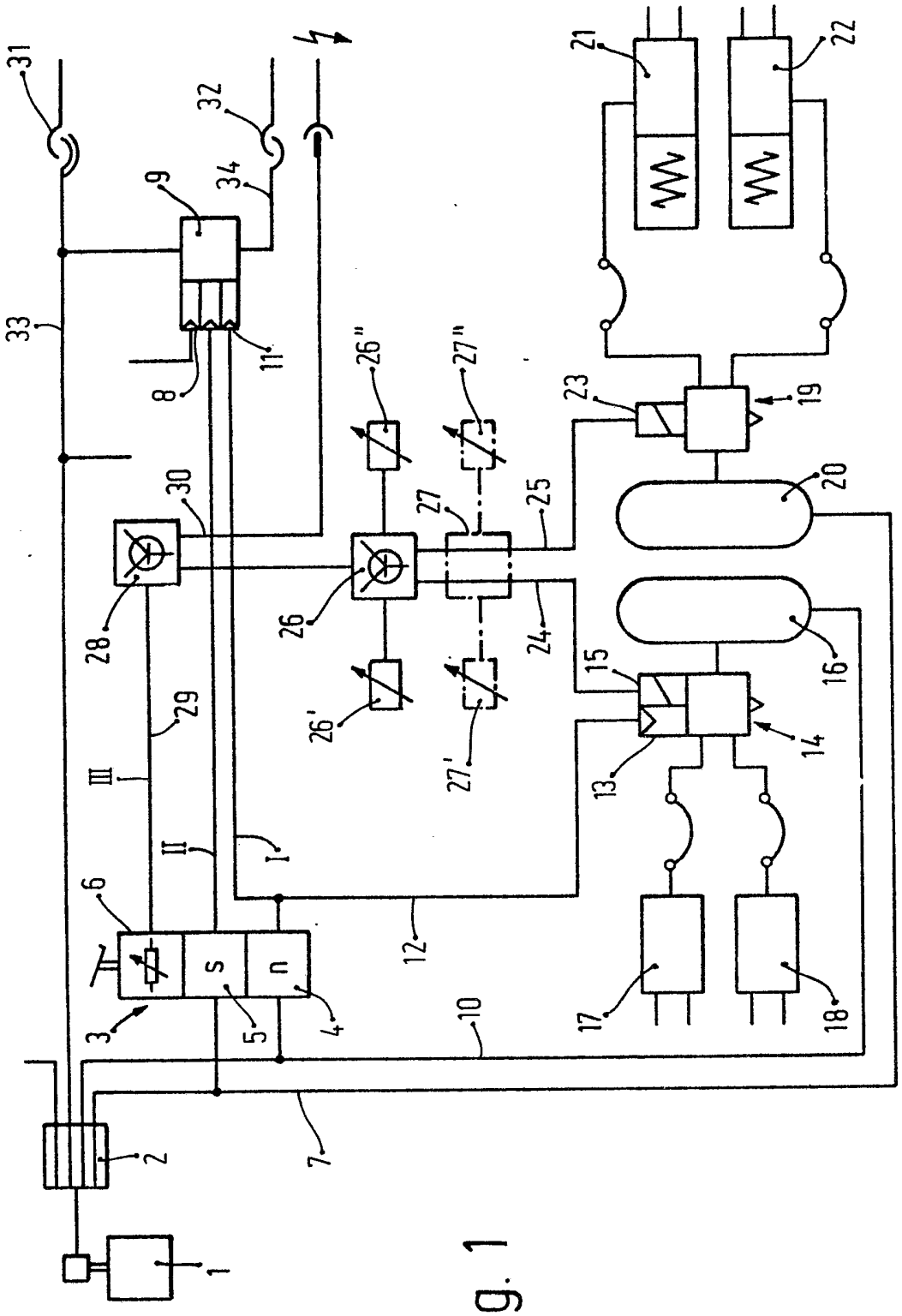

Fig. 1

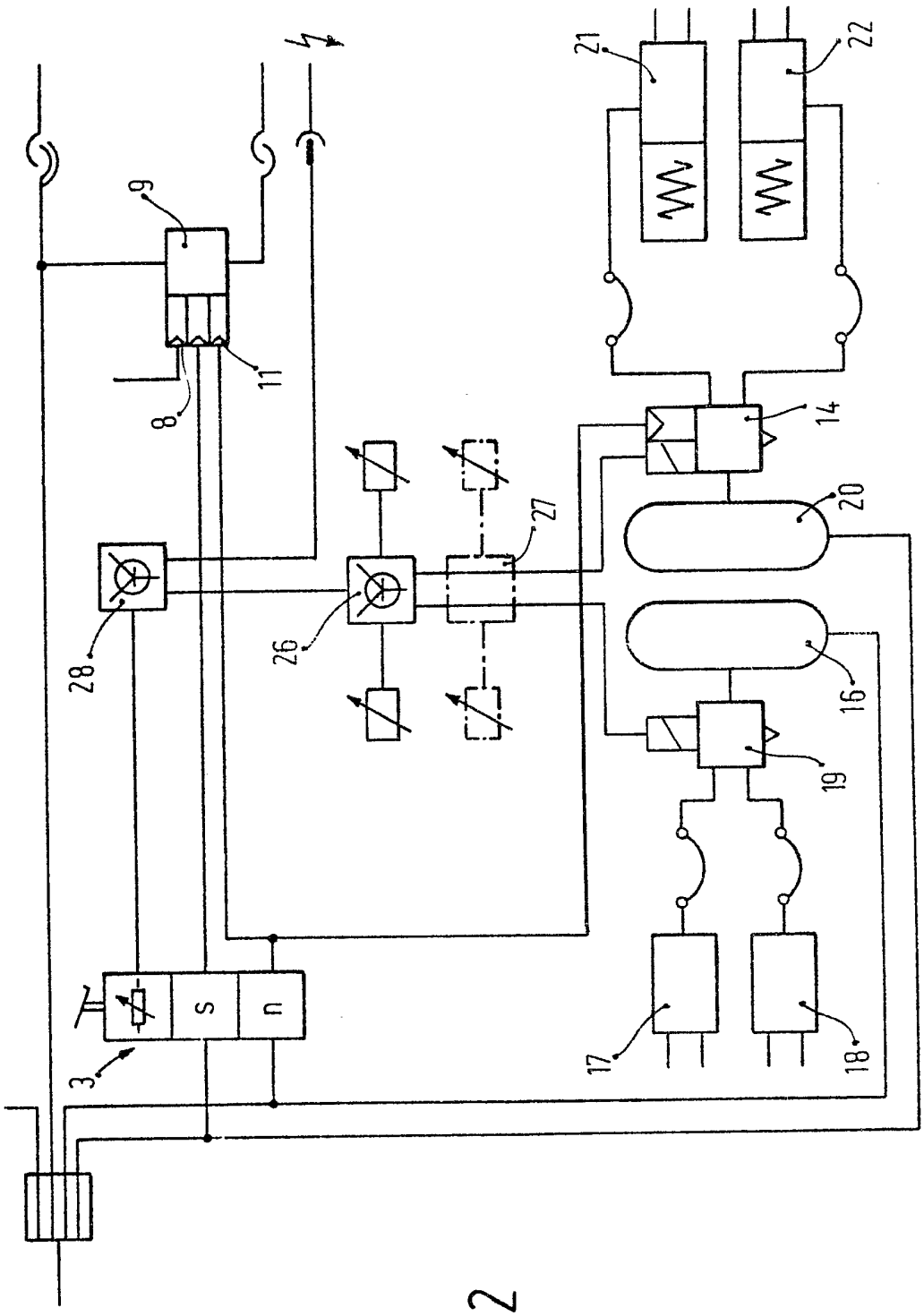

Fig. 2

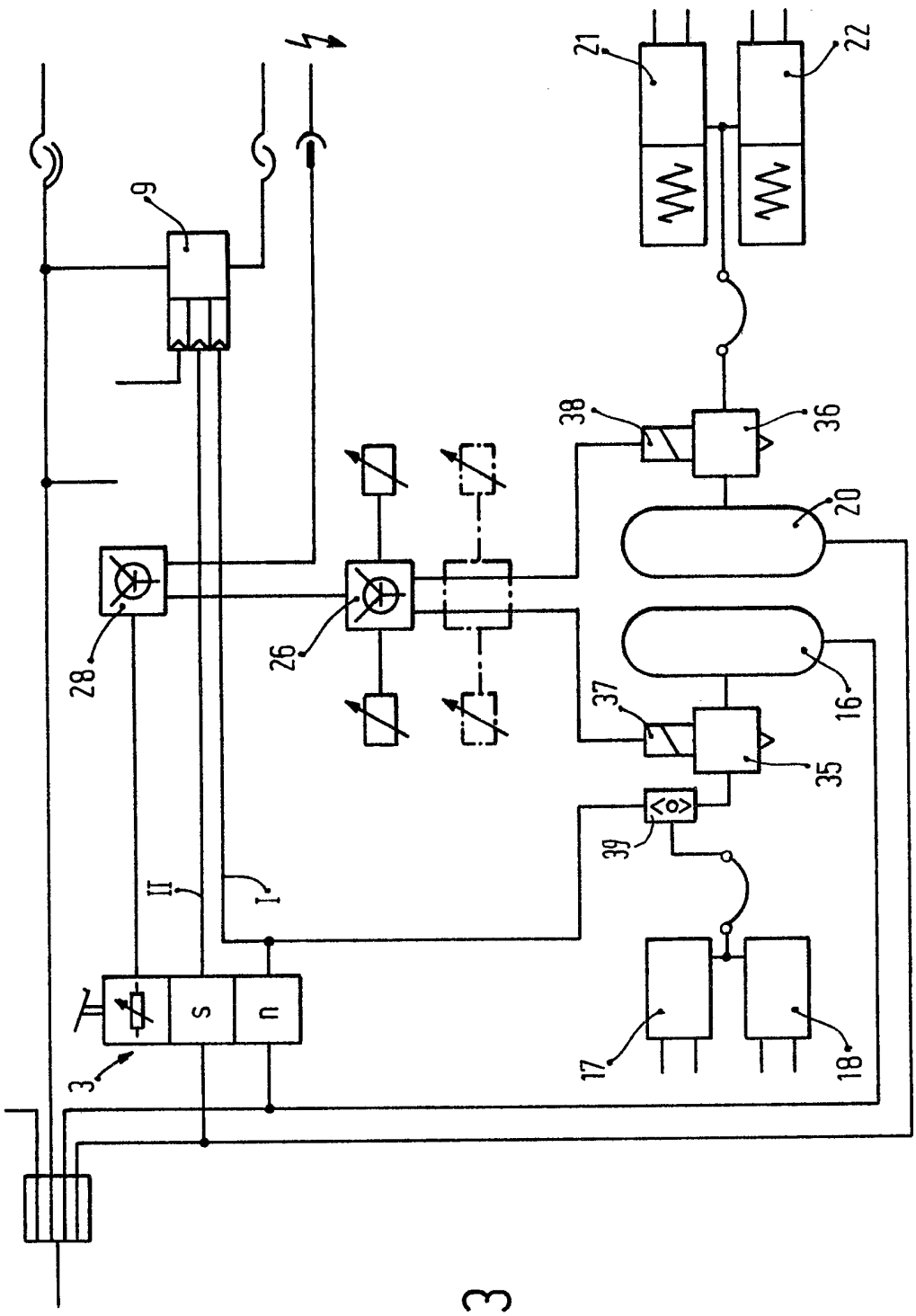

Fig. 3

SPECIFICATION

Improvements in or relating to brake systems for tractor vehicle and trailer combinations

The invention relates to brake systems for tractor vehicle and trailer combinations.

One form of brake system for a tractor vehicle and trailer combination has a multi-circuit service brake which is controlled by a brake actuation member operable by the driver and a trailer brake control valve having at least two control circuits. In one such known brake system (U.S. Patent Specification No. 3,275,381) each of the two hydraulic brake circuits of the tractor vehicle includes a brake booster which is hydraulically controlled and allows compressed air from a compressed-air reservoir to act upon a respective booster piston which then actuates a hydraulic cylinder for generating pressure in hydraulic wheel brake cylinders connected downstream thereof.

This known brake system has the disadvantage that the multiple pressure boosting causes large hystereses and a very long time elaspses until the brake responds. This applies both to the tractor vehicle and to the trailer.

According to the present invention there is provided a brake system for a tractor vehicle and trailer combination having a multi-circuit service brake which is controlled by a brake actuation member operable by the driver, and a trailer brake control valve having at least two control circuits, in which the brake actuation member is constructed to control electrical as well as pressure-medium-operated circuits, and one of the pressure-medium-operated circuits intended for controlling the trailer brake control valve is a pure control circuit.

A brake system for tractor vehicle and trailer combinations embodying the present invention can avoid the above mentioned disadvantage in that the pressure generated by the brake actuation member is fed to the trailer brake control valve in an individual circuit. Hence, rapid response of the trailer brake control valve is ensured.

Furthermore, it is advantageous that the response can also be accelerated on the tractor vehicle by using an electrical circuit.

The invention will be further described by way of example with reference to the accompanying drawings in which:—

Figure 1 is a diagrammatic illustration of a brake system for a tractor vehicle and trailer combination, according to one embodiment of the present invention, having a three-circuit brake value generator with electrical control of the tractor vehicle brake and with compressed-air auxiliary control of the tractor vehicle front axle brakes,

Figure 2 is a diagrammatic illustration of a similar brake system to that of Figure 1, but with compressed-air auxiliary control of the tractor vehicle rear axle brakes, and

Figure 3 is a diagrammatic illustration of a similar system with a compressed-air auxiliary actuating means for the tractor vehicle front axle brakes.

A brake system for a tractor vehicle and a trailer combination is supplied with compressed air by a compressor 1 by way of a four-circuit protective valve 2. A three-circuit brake actuation member, responsive for example to depression of a brake pedal, is disposed downstream of the protective valve 2 and comprises two individual pneumatic valves 4 and 5 and an electrical current controlling circuit element 6. The valves 4 and 5, and the circuit element 6 each monitor a circuit I, II and III respectively, circuit II being a pure control circuit, since it only leads from a supply line 7 by way of the individual valve 5 to a control connection 8 of a trailer brake control valve 9 having at least two control circuits. Although circuit I also leads from a supply line 10 by way of the individual valve 4 to a control connection 11 of the trailer brake control valve 9, a line 12 additionally branches from circuit I downstream of the brake actuation member 3 and leads to one control connection 13 of a pressure-control valve 14.

The pressure-control valve 14 has two control circuits and, for this purpose, has a second control connection for electrical control which is performed by means of a solenoid 15. The pressure-control valve 14 with two control circuits is associated with the front wheel brakes and is connected between a compressed-air reservoir 16 fed with compressed-air by way of the supply line 10, and two front wheel brake cylinders 17 and 18. A pressure-control valve 19 with only a single control circuit is provided for the rear wheel brakes and is disposed between a compressed-air reservoir 20 fed with compressed air by way of the supply line 7, and two rear wheel brake cylinders 21 and 22. The pressure-control valve 19 has a solenoid 23, and the two solenoids 15 and 23 are each connected by way of a respective lead 24 or 25 to a load-dependent switching element 26 which is electrically controllable by two load sensors 26′ and 26″. As is shown by dash-dot lines in the drawing, an anti-skid brake pressure regulating switching element 27 having sensors 27′ and 27″ responsive to the rotational characteristics of the wheels can be incorporated in the two lines 24 and 25. The switching element 26, and possibly also the switching element 27, are actuated by an electronic control device 28 which is connected to the electrical current controlling circuit element 6 of the brake actuation member 3 by way of an electrical lead 29.

An electrical lead 30 for the electrical control of the trailer brakes is connected to the output of the control device 28. Moreover, the trailer is connected to the tractor vehicle by way of two pairs 31 and 32 of pressure-medium coupling heads and by way of a supply line 33 and also by way of a brake line 34.

The system of Figure 1 operates as follows:—

Upon operation of the brake actuation member 3, the electrical current controlling circuit element 6 and also the two individual valves 4 and 5 are switched over. Current flows through the lead 29 to the electronic control device 28 where it is

evaluated. A resulting brake value is then modulated by the load-dependent switching element 27, and the product is fed to the solenoids 15 and 23 by way of the leads 24 and 25. The solenoids 15 and 23 change over the pressure-control valves 14 and 19, and compressed air from the compressed-air reservoirs 16 and 20 is regulated and is introduced into the brake cylinders 17, 18, 21 and 22 over a short path. The brakes are applied with metered forces.

Compressed air flows directly and solely to the trailer brake control valve 9 simultaneously with electric actuation by an electrical control signal which is fed to the trailer by way of the lead 30, so that the trailer brake control valve 9 is changed over rapidly and reliably to apply the brakes and allows compressed-air to flow from the trailer supply line 33 into the trailer brake line 34. In this manner, the trailer is braked rapidly and reliably, possibly even before the tractor vehicle is braked. The reliability of the control of the trailer brake control valve is ensured by the fact that the circuit II is solely connected to the individual valve 5 of the brake actuation member 3.

In the tractor vehicle, compressed-air also reaches the control connection 13 of the pressure-control valve 14 later than the electrical actuation. However, the compressed-air remains ineffective if the electrical control has already taken place. However, if the electrical system should fail, the compressed air at the control connection 13 changes over the pressure-control valve 14 in an auxiliary capacity, and the vehicle is still braked by at least the front wheel brakes. Since the trailer brakes are fully effective, the tractor vehicle and trailer combination can be reliably braked.

Alternatively, the auxiliary control by a pressure-control valve can be transferred to the rear wheel brakes if required. A brake system with such a modification is shown in Figure 2 in which the parts corresponding to those of Figure 1 are provided with the same reference numerals. Only the pressure-control valves 14 and 19 are interchanged.

When using an anti-skid brake pressure regulating control system incorporating the anti-skid switching element 27, the pressure-control valves 14 and 19 have to be constructed such that they are able to control individual brake pressures in each case for multi-channel anti-skid control brake pressure regulating systems. By way of example, this can be achieved by a combination of a plurality of two-port, two-position solenoid valves or by one three-port, two-position solenoid valve and two two-port, two-position solenoid valves for controlled pressure rise, for decreasing the pressure and for holding the pressure.

A modification of the types of construction of Figures 1 and 2 is illustrated in Figure 3. The brake actuation member 3, the electronic switching element 28, the trailer brake control valve 9 and the entire trailer brake system and also the supply of pressure from the reservoirs 16 and 20 are the same as in the brake systems illustrated in Figures 1 and 2.

However, pressure-control valves 35 and 36 are used which are singly and solely controlled by a respective solenoid 37 or 38. A two-way non-return valve 39 is disposed downstream of the pressure-control valve 35 associated with the front wheel brakes, the second side of which valve 39 is connected to the line 12 associated with circuit I.

In this embodiment, the front wheel brakes and also the rear wheel brakes are generally controlled by way of the solenoids 37 and 38 respectively and are actuated by way of the pressure-control valves 35 and 36. However, if the electrical system should fail, the two-way non-return valve 39 is changed over into its other end position by the pressure rise in the line 12 without impairing the trailer brake, and air flows from the circuit I into the brake cylinders 17 and 18 of the front wheel brakes. The tractor vehicle is then still braked by the front wheel brakes. Since the trailer brakes are fully effective, the tractor vehicle and trailer combination can be reliably braked.

CLAIMS

1. A brake system for a tractor vehicle and trailer combination having a multi-circuit service brake which is controlled by a brake actuation member operable by the driver, and a trailer brake control valve having at least two control circuits, in which the brake actuation member is constructed to control electrical as well as pressure-medium-operated circuits, and one of the pressure-medium-operated circuits intended for controlling the trailer brake control valve is a pure control circuit.

2. A brake system for a tractor vehicle and trailer combination as claimed in claim 1, in which the brake actuation member is constructed to control three circuits.

3. A brake system for a tractor vehicle and trailer combination as claimed in claim 1 or 2, in which the pressure-medium-operated circuits and/or the electrical circuit controlled by the brake actuation member are/is intended for controlling the trailer brakes.

4. A brake system for a tractor vehicle and trailer combination as claimed in claim 1, 2 or 3, in which an electrical circuit controlled by the brake actuation member controls at least one pressure-control valve associated with a tractor vehicle brake circuit.

5. A brake system for a tractor vehicle and trailer combination as claimed in claim 4, in which the pressure-control valves are disposed between compressed-air reservoirs and wheel brake cylinders, and each compressed-air reservoir is connected by way of an individual line to one of the two pressure-medium-operated circuits.

6. A brake system for a tractor vehicle and trailer combination as claimed in claim 5, in which load-dependent switching elements are incorporated in the electrical circuit.

7. A brake system for a tractor vehicle and trailer combination as claimed in claims 4, 5 or 6,

in which each of the pressure-control valves controlling brake pressure of tractor vehicle brakes has a single control circuit, and at least one brake line located downstream of one such pressure-control valve, incorporates a two-way non-return valve whose other side is connected to a pressure-medium-operated circuit controlled by the brake actuation member.

8. A brake system for a tractor vehicle and trailer combination as claimed in claim 5, 6 or 7, in which switching elements of an anti-skid brake pressure regulating system are incorporated in the electrical circuit and the pressure-control valves are in each case adapted for regulating individual brake pressures for the purpose of multi-channel anti-skid control.

9. A brake system for a tractor vehicle and trailer combination, constructed and arranged and adapted to operate substantially as hereinbefore particularly described with reference to and as illustrated in Figure 1 or Figure 2 or Figure 3 of the accompanying drawings.

Printed for Her Majesty's Stationery Office by the Courier Press, Leamington Spa, 1984. Published by the Patent Office, 25 Southampton Buildings, London, WC2A 1AY, from which copies may be obtained.