May 14, 1946. H. B. WHITE 2,400,217

SUCTION CLEANER

Filed Sept. 24, 1943 2 Sheets-Sheet 1

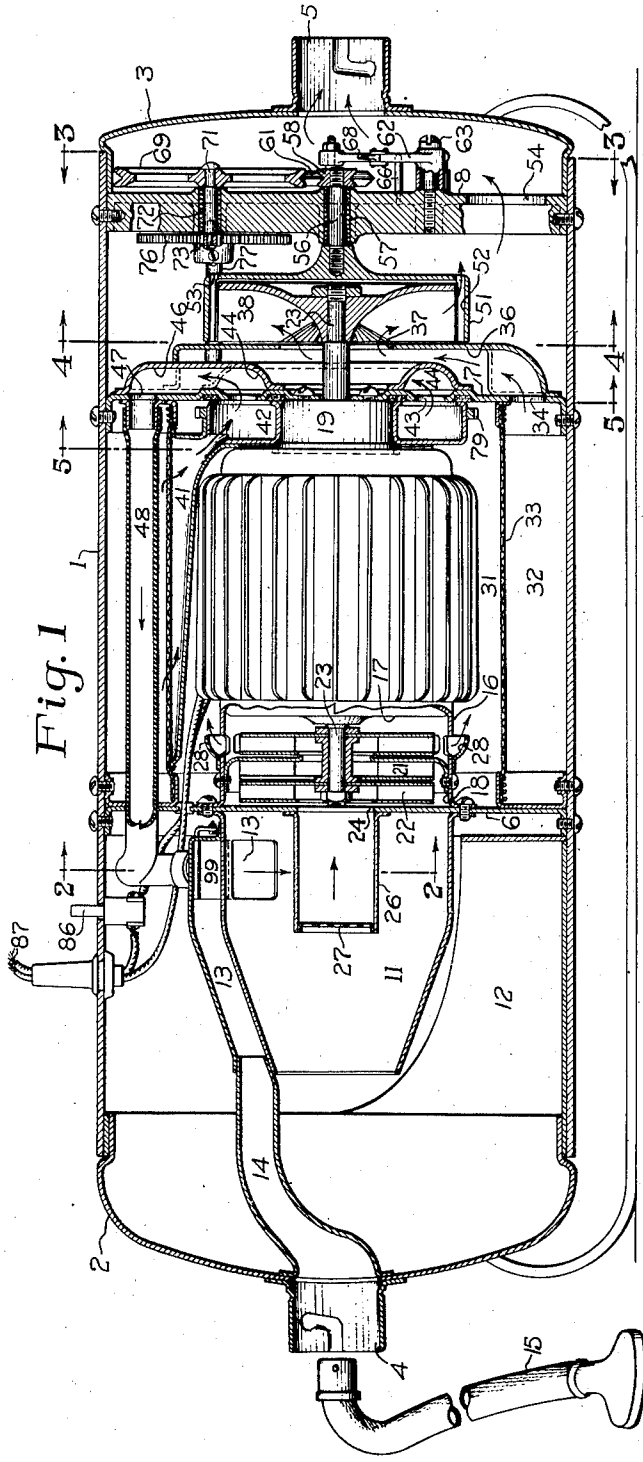

Fig. 1

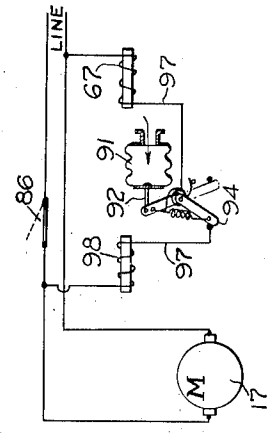

Fig. 8

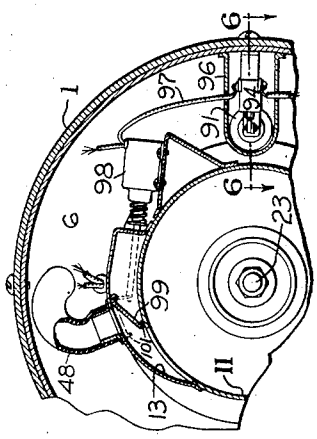

Fig. 2

INVENTOR.
Harry B. White
BY
Harry S. Ducasse
ATTORNEY

May 14, 1946. H. B. WHITE 2,400,217

SUCTION CLEANER

Filed Sept. 24, 1943 2 Sheets-Sheet 2

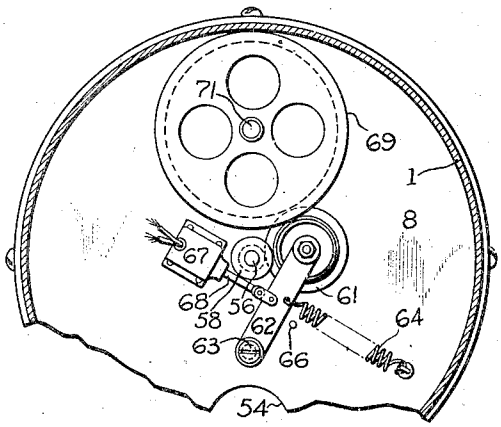

Fig. 3

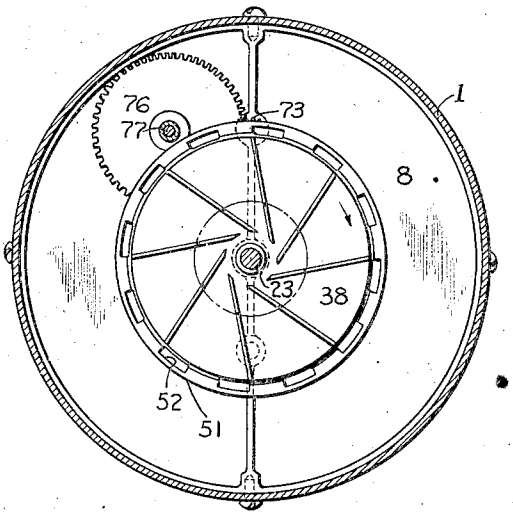

Fig. 4

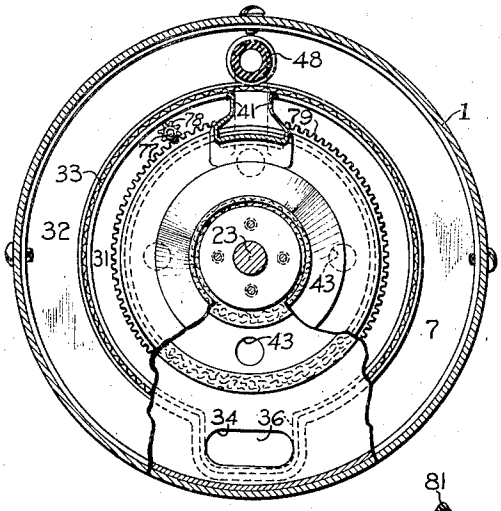

Fig. 5

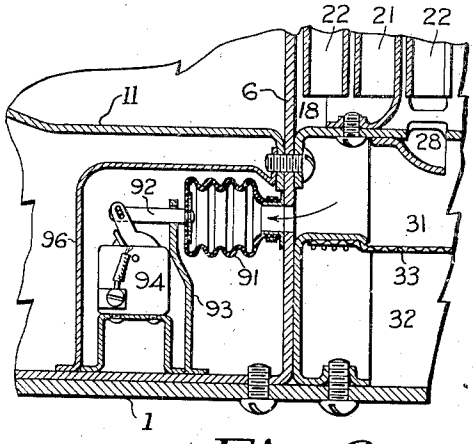

Fig. 6

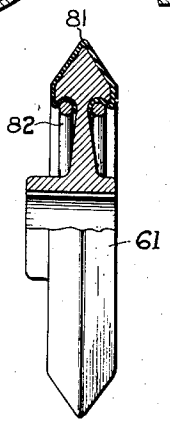

Fig. 7

INVENTOR.
Harry B. White

BY
Harry S. Bucars
ATTORNEY

Patented May 14, 1946 2,400,217

UNITED STATES PATENT OFFICE

2,400,217

SUCTION CLEANER

Harry B. White, Canton, Ohio, assignor to The Hoover Company, North Canton, Ohio, a corporation of Ohio

Application September 24, 1943, Serial No. 503,631

5 Claims. (Cl. 183—57)

The present invention relates to suction cleaners in general and more particularly to a new and novel arrangement of parts and constructional features and improvements in design in a suction cleaner of the type embodying self-cleaning filter means. More particularly, the invention relates to a suction cleaner of the type in which foreign material in the dirt-laden air stream is removed by passage through a plurality of dirt separators and in which an air-driven turbine is provided to actuate a filter-cleaning nozzle in one of the dirt separators.

It is an object of the present invention to provide a new and improved suction cleaner. It is another object of the invention to provide a new and improved suction cleaner having an air-turbine-driven filter-cleaning nozzle. A still further object of the invention is to provide a suction cleaner of the type incorporating an initial dirt separator, suction-creating means, a final dirt separator, and means to clean the final dirt separator and to return the dirt therefrom to the initial dirt separator, said last-mentioned means including an air-driven turbine-actuated filter-cleaning nozzle. Another object of the invention is to provide new and novel means to actuate a filter-cleaning nozzle in a suction cleaner. A further object of the invention is to provide new and novel means to actuate a filter-cleaning nozzle in a suction cleaner and including fluid drive means. These and other more specific objects will appear upon reading the following specification and claims and upon considering in connection therewith the attached drawings to which they relate.

Referring now to the drawings, in which a preferred embodiment of the present invention is disclosed, and in which the same reference character refers to the same parts in the various views:

Figure 1 is a longitudinal vertical section through a suction cleaner constructed in accordance with a preferred embodiment of the invention;

Figure 2 is a section through the construction of Figure 1 upon the line 2—2;

Figure 3 is a section through the construction of Figure 1 upon the line 3—3;

Figure 4 is a section taken upon the line 4—4 of Figure 1;

Figure 5 is a section upon the disjointed line 5—5 of Figure 1;

Figure 6 is a section upon the line 6—6 of Figure 2 and shows the bellows-actuated electrical switch which controls the electrical solenoids which in turn control the movement of and the air flow through the filter-cleaning nozzle.

Figure 7 is a side elevation, partly in section, showing the construction of the clutch friction wheel; and

Figure 8 is a diagrammatic view illustrating the electrical circuit by which the filter-cleaning means are automatically placed in operation when the back pressure of the filter increases to a predetermined degree.

The patent to Bible 2,247,472 discloses a new and important development in the field of suction cleaners. That patent discloses a suction cleaner in which the dirt-laden air stream through the suction cleaner is initially cleaned in a dirt separator of the centrifugal type, the cleaned air then being passed by the suction-creating means into a final dirt separator comprising a filter which removes all of the escaped foreign material from the air stream. Mr. Bible recognized that in time this final filter would require cleaning and provided a filter-cleaning nozzle which was hand-actuated and which was manually connected to the inlet of the machine by the operator.

The present invention comprises a step forward in the art and provides the same basic functional construction taught by Bible but with improvements in the drive of the filter-cleaning nozzle and in the automatic operation thereof. More specifically, according to the present invention, the filter-cleaning nozzle is automatically operated whenever the back pressure of the final filter increases to such an extent as to indicate that it should be cleaned. When this condition arises an air-driven turbine, driven by the flow of air which passes through the main suction-creating means of the cleaner, drives the filter-cleaning nozzle through speed-reducing means which are effective to reduce the motor speed, which is something over 10,000 R. P. M., to a speed of nozzle rotation of something approximating 10 R. P. M. The operator, according to the present invention, is not required to attend to the cleaning of the final filter for that is attended to automatically by the machine. The operator need only empty the dirt container forming a part of the initial separator from time to time when that element becomes filled with foreign material. Such an operation is easily accomplished as dirt, dust, etc., is easily displaced from a metallic container. Such cleaning is not objectionable in the same degree that the cleaning of the filter or filter bag of the usual cleaner is objectionable.

Referring again to the drawings the main casing of the cleaner is seen to comprise a cylindrical body 1 which extends with its major axis arranged horizontally. The opposite ends of cylindrical body 1 are closed by removable covers 2 and 3 each of which is formed with a dusting tool seat indicated at 4 and 5, respectively, which are adapted to receive and seat removably the cleaner end of a dusting tool hose of a type common and well known in the art. Port 4 comprises the inlet or suction opening while port 5 comprises the exhaust port.

Three transverse walls 6, 7 and 8 are arranged within the main body 1 in the order named from the inlet port 4 to the exhaust port 5. These walls support the working parts of the machine as will be hereinafter more fully set forth.

Extending forwardly from transverse wall 6 is a whirl chamber 11 which is cylindrical for a distance from the wall 6 and then is formed as a truncated cone. Whirl chamber 11 opens into the casing 1 between the wall 6 and the cover 2, the latter being formed with an integral pan or receptacle 12 which extends inwardly under the whirl chamber and to a position substantially adjacent the wall 6. Whirl chamber 11 is also interiorly connected to the inlet port 4 by means of a tangentially extending passageway 13 which opens into the cylindrical portion of the whirl chamber of maximum diameter and which, at a point spaced from its entrance into the whirl chamber, extends forwardly and along the exterior thereof to connect to a conduit 14 carried by the cover 2 and which forms the continuation of the inlet 4.

Extended rigidly between and supported by spaced walls 6 and 7 is a smaller casing 16 which serves to support an exterior surface of a driving motor 17 and also provides the casing of an adjacent suction-creating fan chamber 18. Casing 16 is reduced adjacent the supporting wall 7 and at the side of the motor 17 to form a journal 19 for a purpose which will later be explained. The fan chamber 18 is divided into a first stage and into a second stage by a fixed multi-vaned deflector 21 and rotating fans 22 are positioned within the first and second stages, being fixedly mounted upon the rotatable motor shaft 23 which extends therethrough. The eye of the fan chamber is formed by a central aperture 24 in the wall 6 and leading thereto is a fixed inlet 26 provided with a strainer 27 at its outer end to prevent the entrance into the fan unit of any sizeable material. The exhaust ports of the fan chamber are indicated at 28 and permit the air passing through the fan chamber to exhaust into the space surrounding the fan chamber and motor.

The space surrounding the motor fan unit between the walls 6 and 7 is divided into an inner or filter chamber 31 and into an outer or a discharge chamber 32 by the cylindrical filter 33. Air exhausted from the fan unit passes first into the filter chamber 31 which, with the filter 33, comprises a second dirt separator, and upon passing radially and outwardly through the filter 33, enters the discharge chamber 32.

A discharge port 34 connects the discharge chamber 32 with a passageway 36 which leads to the eye 37 of a fan 38 which is itself fixedly mounted on the extended end of the motor shaft 23 opposite to that upon which the main suction-creating fans are mounted. It is clear that the suction-creating effects of the fans 22 and of the fan 38 are cumulative, that is, fan 38 draws the air through the filter 33 while the fans 22 force it therethrough.

To clean the interior surface of the final filter 33, which although handling cleaned air, will in time become sufficiently dirty as to require cleaning, there is provided a rotatable filter-cleaning nozzle 41 which is provided with an elongated mouth defined by filter-contacting lips along the side thereof and which itself interiorly communicates with and is mounted upon a hollow ring 42 seated rotatably upon the journal 19. Ring 42 in fact forms a part of the filter-cleaning nozzle assembly and is provided with an open side facing the wall 7. Ports 43 in wall 7 directly connect the ring and filter-cleaning nozzle to a circular passageway 44 which encircles the motor shaft 23 upon the opposite side of wall 7. A vertical extension 46 of passageway 44 leads to an upper port 47 in the same wall. From the latter port a conduit 48 extends forwardly above the motor-fan unit, and within the discharge chamber 32, forwardly through the wall 6 to be connected to the junction of the inlet conduit 13 and the whirl chamber 11. Conduit 48 is shown as made of rubber, although it is to be understood that this is not absolutely essential.

In order that the filter-cleaning nozzle 41 can contact the entire inner surface of the filter 31, it is necessary that it be moved therearound and to acomplish this result power-transmission and speed-reducing means are provided. These means are actuated by the second suction-creating fan 38 by means of an air turbine 51. Turbine 51 is positioned circumferentially around fan 38 and is provided around its periphery with a series of spaced notches 52 which connect directly to relatively small ports 53 in the back wall of the turbine to provide exhaust passageways for the air passing through the fan. The air after passing through the ports 53 makes its way past the adjacent wall 8, at the enlarged port 54, and passes out to the ambient atmosphere through the end cover 3 at the discharge port 5. The air turbine 51 is itself supported by a shaft 56 carried in a suitable journal or bearing 57 in the wall 8. Upon its opposite end the shaft 56 carries a small diameter V-pulley pinion 58. At all times during the operation of the machine and upon the rotation of the motor thereof, the passage of air through the suction-creating fan 38 effects the rotation of the air turbine 51 which in turn drives the V-pulley pinion 58.

Between the air turbine-driven V-pulley pinion 58 and the filter-cleaning nozzle are a series of friction wheels and gears designed to transmit the rotating force of the air turbine to the nozzle and to reduce the speed of rotation of the air turbine, which is something in the neighborhood of half the motor speed or about 5000 R. P. M., to a speed of rotation of approximately 10 R. P. M. at the nozzle. In the preferred embodiment illustrated this speed-reducing power-transmission means comprises, first a friction wheel 61 which is rotatably mounted upon the end of a loosely pivoted lever 62 having a floating fit upon a pivot pin 63 carried by the wall 8. Friction wheel 61 is normally spaced from the driving V-pulley pinion 58, under the action of a coil spring 64 which is anchored at one end to wall 8 and which at all times tends to draw the lever 62 against a stop pin 66 in which position the wheel 61 is spaced from the pinion. During nozzle operation, however, the action of the spring 64 is overcome by an energized solenoid 67, the armature 68 of which connects to the lever 62. In the nozzle-driving relation of the friction wheel 61, illustrated in Figure 3, the wheel 61 is in contact with the pinion 58 and also in contact with a large diameter V-pulley 69 rotatably mounted upon a shaft 71 carried by a suitable journal 72 in the wall 8. Upon the opposite end of the shaft 71 is positioned a very small diameter pinion gear 73 which is, of course, rotated whenever the large diameter V-pulley 69 rotates. Small gear 73 in turn rotates and drives, as is clearly shown in Figure 4, a large diameter gear wheel 76 carried by a shaft 77 which is suitably mounted for rota-

tion in walls 7 and 8. The opposite end of shaft 77 extends into the filter chamber 31 where it is provided with a final small diameter pinion gear 78 and this last and final pinion gear meshes with a ring gear 79 which is mounted on the ring passageway 42 of the filter-cleaning nozzle 41.

The parts described connecting the air turbine 51 to the final ring gear 79 effect the rotation of the filter-cleaning nozzle when the friction gear 61, which together with the V-pulleys 57 and 69 comprises a clutch, is in the closed or nozzle-operating position. An additional feature which aids in the effective operation of the device comprises the construction of the friction wheel 61 which is illustrated in Figure 7 and which is seen to comprise an outer surface coating of material of suitable frictional quality, such as rubber, indicated at 81, which is preferably cemented on to the surface of the wheel proper and is additionally secured on inner surfaces by suitable snap rings 82, as illustrated.

To effect the operation of the cleaner proper there is provided a manually operable switch 86, see Figures 1 and 8, in series with one of the incoming current-conducting leads 87 which connect to the motor 17. As in the usual cleaner the operator closes the switch 86 when he desires the machine to operate, first having connected the current-conducting leads 87 to a suitable source of current. In the present cleaner, however, additional means are required to effect the operation of the filter-cleaning nozzle under predetermined circumstances comprising the building up of a back pressure within the final filter of a predetermined extent. These means comprise in the first instance an expansible pressure-actuated bellows 91, see Figures 6 and 8, which is interiorly connected, as is illustrated in Figure 6, to the final filter chamber 31. The movable end wall of bellows 91 connects to a shaft 92 slidably mounted in a fixed bracket 93 and is connected at its opposite end to the lever of a two-position snap switch 94 which may be similar to the manually operable switch 86 but is normally biased to open position. The bellows and the switch comprise a unit which is positioned within an enclosing housing 96 for protective reasons, the unit being positioned within the space open to the dirt container 12. Switch 94 is normally biased to open position under the action of a suitable spring as illustrated in the diagrammatic Figure 8 but, upon the expansion of the bellows, a result which follows an increase in the pressure within the filter chamber 31, the switch moves to closed position as illustrated in Figure 8. When so positioned, electric current flows through conductor 97 into two solenoids 67 and 98. Solenoid 67 functions to move the friction wheel 61 to its clutch-closed position, as illustrated in Figure 3, in which the filter-cleaning nozzle operates. The second solenoid 98 has not been described and functions when energized, to move the valve 99 from its dotted line position, as illustrated in Figure 2, to its full line position. Normally valve 99 closes the conduit 48 leading to the nozzle 41 from the whirl chamber 11, but when the valve is moved to its full line position conduit 48, and so the filter-cleaning nozzle 41, is directly connected interiorly to the whirl chamber 11, while the inlet port 4 is substantially sealed therefrom with the exception of a slight leakage past the valve which is permitted by virtue of the presence of one or more small lugs 101 which prevent the valve from closing entirely. This small leakage of air is necessary in order to make up for air which passes from the machine by virtue of having passed through the second fan unit 38.

The operation of the cleaner which has been described is as follows. A normal dusting tool hose of any preferred design will be attached to the inlet port 4 and upon the operator closing the switch 86 to the closed position, illustrated in full lines in Figure 8, current will flow through the driving motor the shaft of which will rotate together with the fans 22 and 38 carried thereby. The high speed rotation of the fans 22 causes air to be drawn through the dusting tool hose, which is indicated in Figure 1 at 15, through the conduits 14 and 13 and tangentially into the whirl chamber 11. The high speed circular rotation of the air stream within the whirl chamber 11 causes the foreign material to be thrown radially outwardly and it moves forwardly and from the open forward end of the chamber 11 to drop into the dirt receptacle 12 extended thereunder. The air, with nearly all of the foreign material removed, passes through the strainer 27 and into the inlet 26 on its way into the fan chamber 18. After passing through both stages of the fan unit the air is exhausted through the ports 28 into the second dirt separator comprising the filter chamber 31 and the surrounding enclosing filter 33. The air passes through the filter chamber 31 outwardly into the discharge chamber 32 and any foreign material which did escape from the whirl chamber 11, comprising the initial separator, is removed by the air-pervious filter 33. The air within the discharge chamber 32 passes, under the positive pressure of the exhaust of the fans 22 and also under the action of the suction of the fan 38, from the discharge chamber 32 through the port 34 and via the passageway 36 into the second fan 38. The air-moving effect of this second fan is additive to that of the first fan unit and results in an increased flow of air through the machine. When the machine is being used in surface cleaning only and when the filter-cleaning nozzle is not in operation, all of the air passes from discharge chamber 32 into the second fan 38 and is exhausted radially therefrom and passes out through the ports 53 in the rotating air turbine 51 to make its way from the machine via the port 54 and finally through the exhaust port 5.

The machine will operate as described for an extended period of time without operation of the filter-cleaning nozzle mechanism until finally the collected foreign material upon the inner surface of the filter 33 results in an undue increase in the resistance to the flow of air therethrough, known as an increase in the back pressure. This increase in the back pressure is immediately effective to expand the pressure-actuated bellows 91 which operates the switch 94 with a snap action. The latter moves to the full line position illustrated in Figure 8 thereby causing current to pass through the lead 97 and the electrical solenoids 67 and 98.

The actuation and the energization of solenoid 67 results in the closing of the clutch between the air turbine 51 and the filter-cleaning nozzle 41, that is, in the movement of the friction wheel 61 into contact with the V-pulley pinion 57 and the V-wheel 69. Thereupon the rotation of the air turbine 51 produces the rotation of the V-wheel or pulley 69 and from it through the speed-reducing gear chain described, the slow speed rotation of the filter-cleaning nozzle 41 around the interior surface of the final filter 33.

The energization of the solenoid 98 simultaneous with the actuation of the clutch between the air turbine and the filter-cleaning nozzle, effects the movement of the valve 99 to open the filter-cleaning nozzle to the interior of the whirl chamber 11 through connecting the conduit 48 to that chamber, as illustrated in Figure 2 in full lines. The nozzle 41 is now rotated over the interior surface of the filter 33 and the suction therein effects a flow of air from the discharge chamber 32 back through the filter 33 and into the nozzle 41. Except for that area of the filter contacted by the nozzle 41 the air continues to flow from the filter chamber 31 outwardly into the discharge chamber 32.

Valve 99 substantially reduces the flow of air into the machine through the dusting tool hose during nozzle operation but does not entirely eliminate it. The flow of air through the dusting tool hose must not be entirely eliminated for a part of the air is always exhausted through the second fan 38. This is the air which drives the air turbine 51 and thereafter passes from the machine through the discharge port 5. It must be replaced. The leakage past the valve 99 from the inlet 4 permits air to enter to make up for this lost air.

The operation of the filter-cleaning nozzle continues with the nozzle passing around the inner surface of the filter 33 until sufficient foreign material has been removed from the surface thereof to reduce the back pressure of the filter 33 until the pressure within the filter chamber 31 drops to a point sufficient to collapse the bellows 91. This movement of bellows 91 causes the electrical switch 94 to move with a snap action to open position, that illustrated in dotted lines by the switch blade in Figure 8. No current now passes through the solenoids 67 and 98 and under the actuation of the spring biases acting thereon, friction wheel 61 moves to clutch-open position and the valve 99 moves to port-closing position with respect to the conduit 48 connected to the filter-cleaning nozzle 41. Operation of the filter-cleaning nozzle and the passage of air therethrough thereupon stops, and the machine again functions as originally described and solely as a unit for outside cleaning.

I claim:

1. A suction cleaner having a cleaning nozzle for dirt-laden air, a preliminary dirt separator connected to said nozzle, suction-creating means connected to said preliminary separator to draw air therethrough, a final dirt separator of the type in which the resistance to the flow of air increases with dirt accumulation connected to said suction-creating means to receive air exhausted therefrom, movable dirt-removing means to remove foreign material from said final separator, permanent air-conducting means to connect said dirt-removing means to said preliminary separator, an air turbine connected on the exhaust side of said suction-creating means through which air from said suction-creating means passes, and means connecting said turbine to said movable dirt-removing means to actuate same.

2. A suction cleaner having a cleaning nozzle for dirt-laden air, a preliminary dirt separator connected to said nozzle, suction-creating means connected to said preliminary separator to draw air therethrough, a final dirt separator of the type in which the resistance to the flow of air increases with dirt accumulation connected to said suction-creating means to receive air exhausted therefrom, movable dirt-removing means to remove foreign material from said final separator, permanent air-conducting means to connect said dirt-removing means to said preliminary separator, a second suction-creating means connected to said final dirt separator to draw air therethrough, an air turbine connected to and actuated by the exhaust of said second suction-creating means, and power-transmitting and speed-reducing means connecting said air turbine to said dirt-removing means.

3. A suction cleaner of the type having a cleaning nozzle for dirt-laden air, a preliminary dirt separator connected to said nozzle, suction-creating means connected to said preliminary separator to draw air therethrough, a final dirt separator of the type in which the resistance to the flow of air increases with dirt accumulation connected to said suction-creating means to receive air exhausted therefrom, and movable dirt-removing means to remove foreign material from said final separator; permanent air-conducting means to connect said dirt-removing means to said preliminary separator, an air turbine connected on the exhaust side of said suction-creating means through which air from said suction-creating means passes, power-transmitting means including clutch means connecting said air turbine to said dirt-removing means to actuate the latter, and pressure-responsive means controlled by the back pressure of said final dirt separator to operate said clutch means.

4. A suction cleaner of the type having a cleaning nozzle for dirt-laden air, a preliminary dirt separator connected to said nozzle, suction-creating means connected to said preliminary separator to draw air therethrough, a final dirt separator of the type in which the resistance to the flow of air increases with dirt accumulation connected to said suction-creating means to receive air exhausted therefrom, and movable dirt-removing means to remove foreign material from said final separator; permanent air-conducting means to connect said dirt-removing means to said preliminary separator, valve means to control the flow of air through said air-conducting means, an air turbine connected on the exhaust side of said suction-creating means through which air from said suction-creating means passes, power-transmitting means including clutch means connecting said air turbine to said dirt-removing means to actuate the latter, and pressure-responsive means open to and controlled by the back pressure of said final dirt separator to operate said clutch means.

5. In a suction cleaner, a main cleaning nozzle, an initial dirt separator connected to said nozzle, suction-creating means connected to said initial separator to draw air therethrough, a driving motor for said suction-creating means, a final dirt separator including a filter connected to said suction-creating means to receive air exhausted therefrom, second suction-creating means driven by said motor and connected to said final filter to draw air therethrough and to reduce the back pressure thereof, dirt-removing means for said final filter, and air-conducting means to convey dirt removed by said dirt-removing means directly to said initial separator by-passing said second suction-creating means, and means driven by the air passing through said second suction-creating means to actuate said dirt-removing means.

HARRY B. WHITE.