May 29, 1934. M. P. DUPLESSIS 1,960,621

ILLUMINATING DEVICE

Filed May 9, 1932 2 Sheets-Sheet 1

Fig. 1.

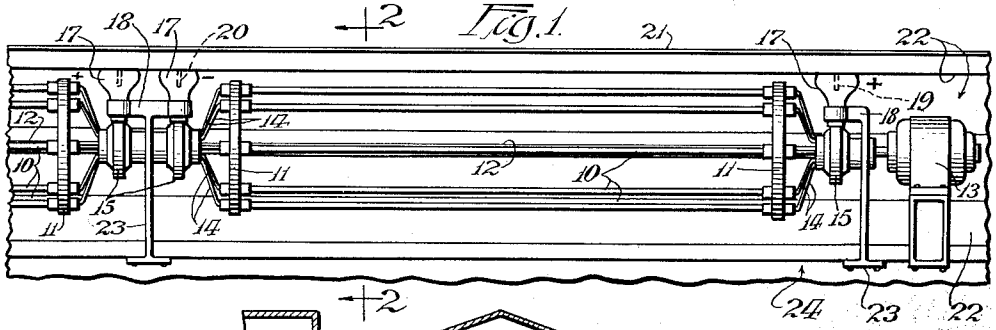

Fig. 2.

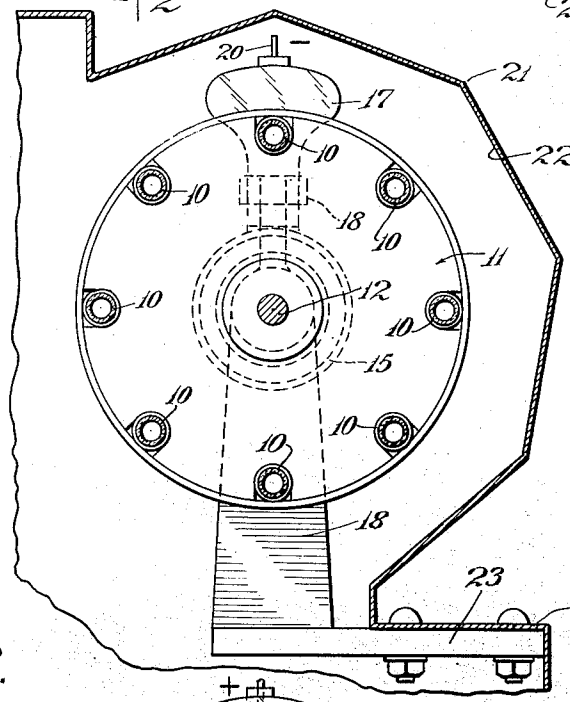

Fig. 3.

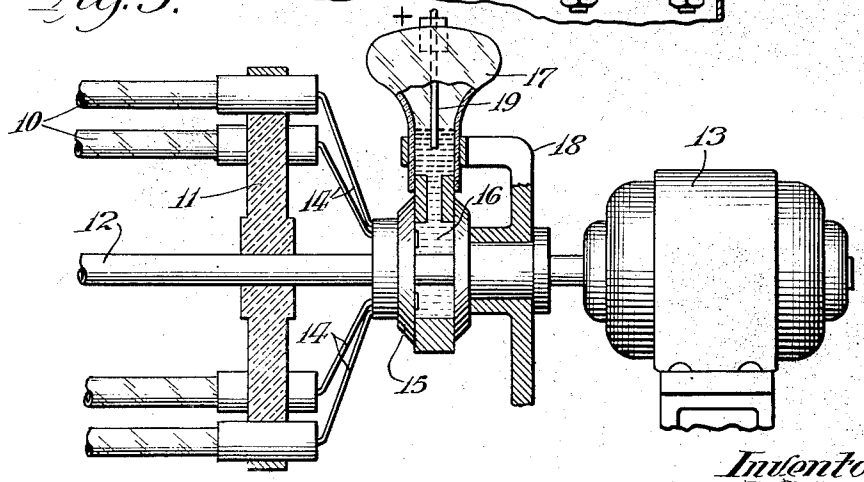

Inventor:
Milton P. Duplessis,
By
Attorney.

May 29, 1934. M. P. DUPLESSIS 1,960,621

ILLUMINATING DEVICE

Filed May 9, 1932 2 Sheets-Sheet 2

Fig. 4.

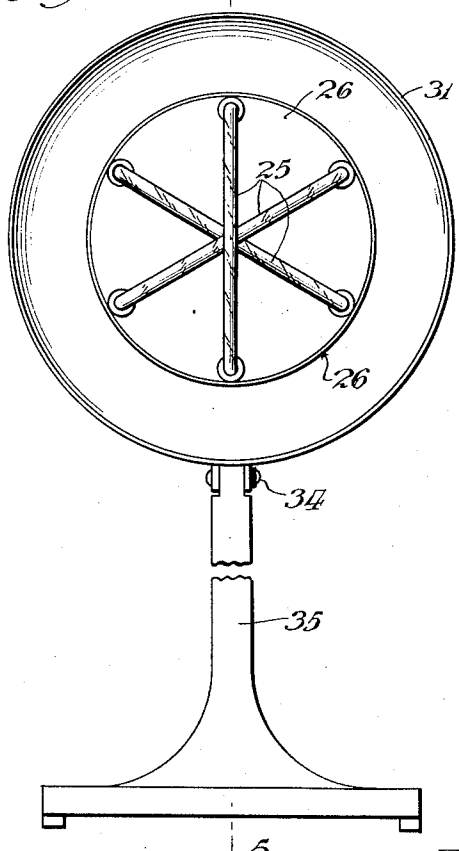

Fig. 5.

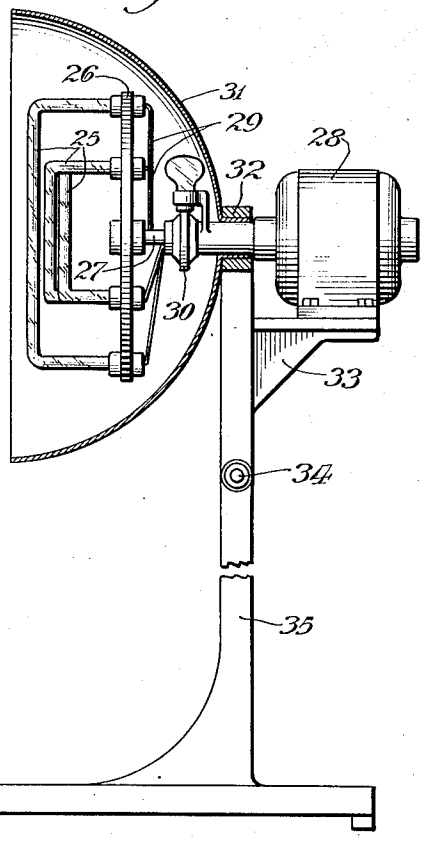

Fig. 6.

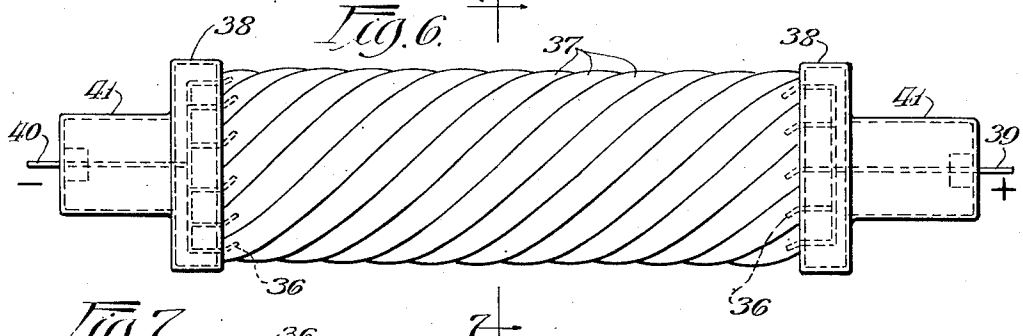

Fig. 7.

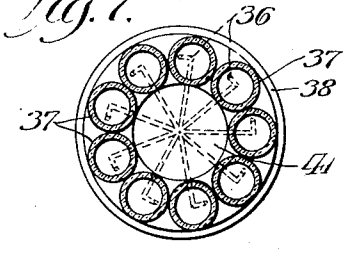

Inventor:
Milton P. Duplessis,
By J. Jochum
Attorney.

Patented May 29, 1934 1,960,621

UNITED STATES PATENT OFFICE

1,960,621

ILLUMINATING DEVICE

Milton P. Duplessis, Grand Rapids, Mich.

Application May 9, 1932, Serial No. 610,094

5 Claims. (Cl. 240—1.1)

This invention relates to improvements in lighting apparatus, and one of the objects of the invention is to provide an improved apparatus of this character for producing white light, similar to sunlight or natural daylight to be employed as illumination to accentuate true colors of articles, materials, merchandise, etc.

Heretofore it has been attempted to obviate the difficulty, in matching colors and in producing the proper effect upon the eye of the observer, as in many instances they do not appear the same under artificial light as by daylight, and various "daylight" lamps have been employed, in which, the colors have been modified by screens or reflectors to give the actual tint of daylight, but the use of screens or reflectors of this character diminishes the illuminating power of the lamp, and less light is obtained for the same electrical energy.

It is one of the objects of the present invention to overcome these difficulties and objections, and to provide an improved lighting apparatus which will produce an even distribution of light, and at the same time eliminate all shadows, and in which apparatus lamps of a plurality of spectrum colors, or primary colors are so arranged that the color rays will be superposed, or so mixed together, as to produce a white light.

A further object is to provide an improved apparatus of this character in which the lights are produced by means of tubes in which vapor gas is illuminated, such for instance as the well known neon tubes, and which tubes are adapted to be revolved about a common axis, or, in a stationary apparatus, the tubes may be intertwisted or intertwined as to produce a commingling or intermixture of the rays from the various colored lamps or tubes.

To the attainment of these ends and the accomplishment of other new and useful objects as will appear, the invention consists in the features of novelty in substantially the construction, combination and arrangement of the several parts hereinafter more fully described and claimed and shown in the accompanying drawings illustrating this invention and in which

Figure 1 is a front elevation of an apparatus of this character constructed in accordance with the principles of this invention.

Figure 2 is a vertical, sectional view taken on line 2—2, Figure 1, on an enlarged scale.

Figure 3 is a view partly in elevation, partly in section and partly broken away and with parts omitted, of one end of the apparatus, showing one form of suitable non-arcing contact commutator for use in connection with the invention.

Figure 4 is a front elevation of another form of the invention.

Figure 5 is a view partly in side elevation, partly in vertical section and partly broken away, of the form of the invention shown in Figure 4.

Figure 6 is a front elevation of another form of arrangement of light tubes.

Figure 7 is a detail sectional view taken on line 7—7, Figure 6.

Referring more particularly to the drawings and in the form of the invention shown in Figures 1 to 3, the apparatus consists essentially in the provision of a plurality of tubes 10 of any desired diameter and length and in which tubes vapor gas is confined and is illuminated. It has been found that the well known neon tubes are particularly adapted for use in connection with this invention, the tubes being secured by their ends in heads 11, the heads being preferably connected together by means of a shaft 12 and which shaft is rotated by means of an ordinary motor 13.

The tubes 10 are spaced from each other for any desired distance about the shaft 12 and any number of tubes may be employed, according to the number of colors to be used.

It is preferable to employ a plurality of series of tubes which emanate any desired number of spectrum colors or primary colors alternately arranged and so positioned that the rays therefrom will be directed upon the object, article or surface to be illuminated, the tubes being so arranged with respect to each other that the rays therefrom will commingle and will be superposed upon the surface or object in a manner to produce a white light, simulating daylight.

It has been found in practice that the colors blue, yellow and green alternately arranged will produce the desired result, but it is to be understood that any of the spectrum colors or any of the primary colors may be used which when combined or intermingled will produce the effect desired.

The electrodes 14 leading from the ends of the tubes may be connected with any suitable non-arcing device, one form of which suitable for the purpose embodies a commutator 15 having a mercury contact for such tubes, the commutator having a chamber 16 through which the shaft 12 passes. A supplemental chamber 17 of any suitable electrical insulation and of any desired size and configuration is supported in any suitable manner, such as by means of a bracket 18, has communication with the chamber 16, and suf-

ficient mercury, or any suitable fluid fills the chamber 16 and partially fills the supplemental chamber 17. The positive side of the current supplied to the tubes is connected to a contact 19 that projects into the supplemental chamber 17 a sufficient distance so that the mercury will always contact therewith and the negative side 20 of the source of electrical supply being connected in a similar manner to a similar mercury contact commutator at the other end of the tube.

With this form of contact it will be manifest that there will be insured constant contact between the terminals of the circuit and the shaft or rotary distributing element 12. Any expansion or contraction of the mercury or fluid in the chambers 16 and 17 will always insure a contact and the circuit will be sealed at all times, as the weight of the mercury or liquid will always press upon the rotary element 12. Furthermore this contact will prevent flashing of the circuit.

Obviously, there may be provided a plurality of sets of tubes arranged end to end according to the extent or area which it is desired to illuminate.

With this construction it will be manifest that different colored light rays emanating from the tubes 10 will radiate in all directions about the axes of the tubes and when the tubes are rotated about the axis of the shaft 12 the light rays from the tubes will intersect each other in all directions and in such a manner that the combination of the different colored light rays will produce the desired white light.

Furthermore, by the arrangement of the tubes in this manner and by rotating the same there will be an even distribution of the light, and at the same time all shadows will be eliminated.

If desired, the apparatus may be located within a housing 21 which partially encompasses the same and the housing may be formed in a manner to produce a plurality of surfaces 22 arranged at angles with respect to each other, the face of the surfaces 22 in proximity to the tubes may be highly polished to constitute reflectors, or if desired, mirrors may be employed for that purpose in lieu of the surfaces 22.

The housing 21 may constitute either the point of juncture between the ceiling and wall of a room or show window or one of the upright walls and the top of the show case, in which the apparatus may be installed. The apparatus is preferably secured in position by anchoring the supports 18 by means of their base 23, to a support 24.

In the form of the invention shown in Figures 4 and 5, the tubes 25 are of a U shaped configuration adapted to be arranged one within the other and disposed at different angles with respect to each other, the ends of the tubes being secured to a head 26, which latter in turn is secured to a shaft 27 rotated by a motor 28. The electrodes or contacts 29 leading from the ends of the tubes are connected preferably to a mercury contact commutator 30, similar to that shown in Figure 3, so that when the head 26 and the tubes supported thereby are rotated, an electrical contact will always be maintained.

In this form of the invention there is preferably provided a reflector 31 which encompasses the tubes 25 and the reflector is secured to a support 32 upon which a bracket 33 is preferably mounted and upon which bracket the motor 28 is arranged. This support 32 is preferably connected by means of a pivot or hinged joint 34 with the base or standard 35, so that when desired, the support 32 may be moved about its pivot 34 to vary the position of the tubes 25 and reflector 31 with respect to the base or standard.

In the form of the invention shown in Figures 6 and 7, the tubes 36 are arranged in close proximity to each other and in the production of the device are also arranged parallel. The tubes are then twisted with respect to each other to form spirals 37 which extend in a general direction lengthwise of the axis of the element, the tubes emanating the different colored rays being alternately and properly arranged with respect to each other before being twisted together.

The ends of the tubes are secured to heads 38, and to one end of the element thus produced is connected the positive side 39 of the electric current, and to the other end of the element is connected the negative side 40 of the current.

In this form of the invention the tubes are preferably maintained stationary, although they may be rotated, and to that end a portion of the heads 38 are reduced as at 41 to form trunnions or supports for the element.

With this invention it will be manifest that the light rays will be so commingled that a large area will be illuminated and all shadows will be eliminated, and furthermore, by the arrangement of the tubes in the manner disclosed, the rotation of the tubes will not produce any flicker or halation.

While the preferred forms of the invention have been herein shown and described, it is to be understood that various changes may be made in the details of construction and in the combination and arrangement of the several parts, within the scope of the claims, without departing from the spirit of this invention. It is also to be understood, that while one form of mercury contact commutator has been herein shown and described as being adapted for use with this invention, any other non-arcing commutator device suitable for the purpose may be employed.

What is claimed as new is:—

1. An illuminating device of the character described embodying a plurality of transparent tubes or chambers in which vapor gas is illuminated to produce spectrum colors individual to the tubes, the rays from each tube radiating in all directions about their respective axes, said tubes being arranged with respect to each other that the rays therefrom will intersect each other in all directions to produce a light simulating daylight and whereby clearly defined spectrum or color lines will be avoided, means mounting said tubes for rotation about a common axis parallel with the axes of the tubes and means for thus rotating the tubes.

2. An illuminating device of the character described embodying a plurality of transparent tubes in which vapor gas is illuminated to produce various colors individual to the tubes, means for supporting the tubes by their extremities and constituting with said tubes a unitary structure, means mounting said structure for rotation about an axis parallel with the axes of the tubes to cause the colored rays from the various tubes to intersect each other in all directions about the axes of the tubes, to produce a white light simulating daylight, and means for thus rotating the unit structure.

3. An illuminating device of the character described embodying a plurality of transparent tubes in which vapor gas is illuminated to produce various colors individual to the tubes, means

for supporting the tubes by their extremities and constituting with said tubes a unitary structure, means mounting said structure for rotation about an axis extending in the general direction of the axes of the tubes to cause the colored rays from the various tubes to intersect each other in all directions to produce a white light simulating daylight, means for thus rotating the unit structure, and reflectors disposed adjacent a portion of the path of movement of said tubes.

4. An illuminating device of the character described embodying a plurality of elongated transparent tubes in each of which a vapor gas is illuminated to produce a color individual to the tubes, said tubes being twisted together about and in a general direction extending lengthwise of a common axis to constitute a unitary structure, and means mounting said structure for rotation about its longitudinal axis, the light rays radiating from the tubes in all directions about the axes of the tubes, and the rays from the tubes intersecting the rays from each other in all directions.

5. An illuminating device of the character described embodying a plurality of elongated transparent tubes in which vapor gas is illuminated to produce various colors individual to the tubes, said tubes being closely twisted together to cause each tube to extend a plurality of times about and in a general direction extending lengthwise of a common axis to constitute a unitary structure, and means mounting said structure for rotation about its longitudinal axis, the rays from the tubes intersecting each other in all directions.

MILTON P. DUPLESSIS.