US00RE40386E

(19) United States
(12) Reissued Patent
Kobayashi et al.

(10) Patent Number: US RE40,386 E
(45) Date of Reissued Patent: Jun. 17, 2008

(54) **CHROME PLATED PARTS AND CHROME PLATING METHOD**

(75) Inventors: **Yuichi Kobayashi**, Sagamihara (JP); **Junichi Nagasawa**, Kamakura (JP); **Shoichi Kamiya**, Toyokawa (JP); **Toshiyuki Fukaya**, Nukata-gun (JP); **Hiromi Hieno**, Gamagori (JP); **Kazuo Watanabe**, Fuchu (JP)

(73) Assignee: **Hitachi Ltd.**, Tokyo (JP)

(21) Appl. No.: **10/401,613**

(22) Filed: **Mar. 31, 2003**

Related U.S. Patent Documents

Reissue of:
(64) Patent No.: **6,329,071**
Issued: **Dec. 11, 2001**
Appl. No.: **09/431,321**
Filed: **Nov. 2, 1999**

(30) **Foreign Application Priority Data**

Nov. 6, 1998 (JP) 10-332047
Oct. 6, 1999 (JP) 11-285503

(51) **Int. Cl.**
B32B 15/01 (2006.01)
C25D 5/14 (2006.01)
C25D 5/18 (2006.01)
C25D 3/04 (2006.01)
C25D 3/10 (2006.01)

(52) **U.S. Cl.** **428/615**; 205/104; 205/170; 205/179; 205/283; 205/290

(58) **Field of Classification Search** 148/121, 148/123; 205/104, 170, 179, 222, 224, 283, 205/290; 428/615
See application file for complete search history.

(56) **References Cited**

U.S. PATENT DOCUMENTS

3,318,786 A * 5/1967 Faust et al. 205/104
3,616,349 A * 10/1971 Szupillo 205/657
3,661,733 A * 5/1972 Roggendorf 205/286

(Continued)

FOREIGN PATENT DOCUMENTS

DE	3933896	10/1989
GB	2 236 763	4/1991
GB	2236763	4/1991

(Continued)

OTHER PUBLICATIONS

Kohl et al.; UK Pat. App. 2 236 763 A; Apr. 1991; IDS; claims.*

Lausmann et al., "Die galvanische Verchromung"; Leuze–Verlag, Saulgau; 1st edition 1998; chapter 2.6.4.2 (pp. 136–152), and chapter 7.4.6 (pp. 347–352).*

Federal Specification QQ–C–320a (Jul. 25, 1967) in Military Specification and Standards (rustproof version).*

(Continued)

Primary Examiner—Michael J. Feely
(74) *Attorney, Agent, or Firm*—Oblon, Spivak, McClelland, Maier & Neustadt, P.C.

(57) **ABSTRACT**

Using a chrome plating bath containing organic sulfonic acid, plating is conducted by application of a pulse current to thereby form a crack-free lower chrome layer on a steel substrate. The lower chrome layer has a compressive residual stress of 100 MPa or more and a crystal grain size of from 9 nm to less than 16 nm. Subsequently, by application of a direct current, a cracked upper chrome layer is formed on the lower chrome layer, to thereby obtain a chrome plated part. The lower chrome layer imparts the chrome plated part with heat resistance and corrosion resistance, and the upper chrome layer imparts the chrome plated part with wear resistance and good sliding properties.

26 Claims, 6 Drawing Sheets

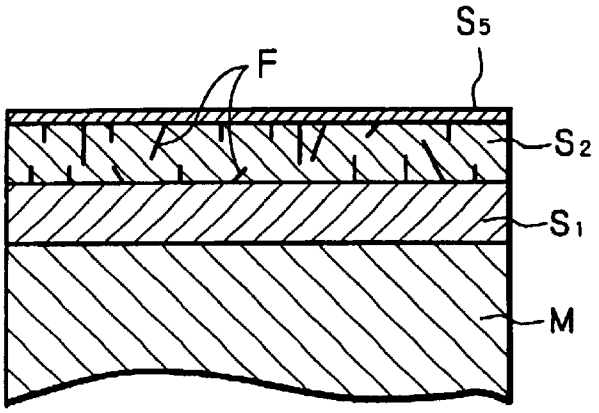

U.S. PATENT DOCUMENTS

3,886,053	A	*	5/1975	Leland	205/93
3,985,916	A	*	10/1976	Church et al.	427/543
4,804,446	A	*	2/1989	Lashmore et al.	205/104
4,869,971	A	*	9/1989	Nee et al.	428/635
5,837,354	A	*	11/1998	Ogisu et al.	428/208
6,106,351	A	*	8/2000	Raina et al.	445/24
6,329,071	B1		12/2001	Kobayashi et al.	

FOREIGN PATENT DOCUMENTS

JP	43-020082	*	8/1968
JP	61-235593	*	10/1986
JP	3-6393		1/1991
JP	3-207884		9/1991
JP	4-350193		12/1992
JP	04-350193	*	12/1992
JP	10-156490	*	6/1998
JP	11-210865		8/1999
JP	2000-199095 A		7/2000
KR	96-705966	*	11/1996
WO	WO 89/07162		8/1989
WO	WO 95/141121	*	5/1995

OTHER PUBLICATIONS

"Hihakai Kensa (non–destructive inspection)", vol. 37, item 8, pp. 636–642, edited by the Japanese Society for Non–destructive Inspection (no date).*

Machine translation of JP 10–156490, provided by the JPO website (1998).*

Makoto Kuramoto, et al., "Stress Measurement in Electrodeposited Chromium", The Japanese Society for Non–Destructive Inspection, vol. 37, No. 8 (pp. 1–16) (no date).

Official Action of the German Patent and Trademark Office (Dec. 17, 2002) w/English Translation.

G.A. Lausmann, et al., "Chromium Electroplating", Electroplating and Surface Treatment Textbook Series, First Edition, 1998, pp. 146–152 and 347–352.

Surface Treatment Technology Compendium, edited by the Surface Treatment Technology Association, published by The Nikkan Kogyo Shimbun, Ltd., Feb. 27, 1998, First Edition, p. 218 w/English translation.

* cited by examiner

Fig. 1

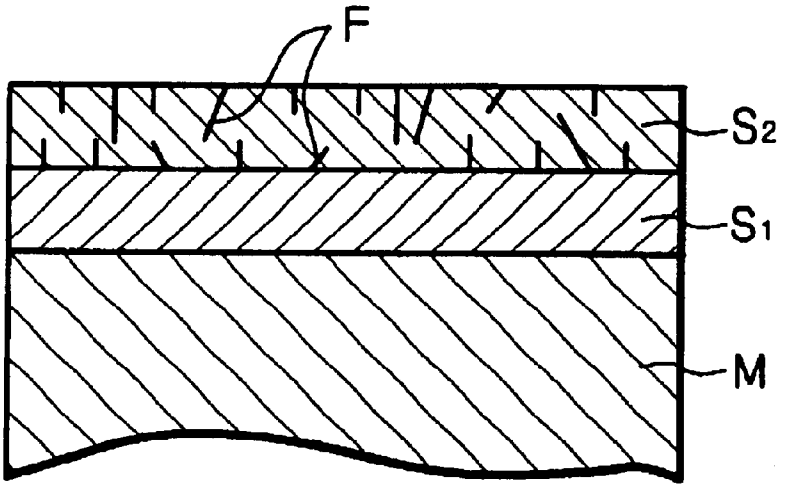

Fig. 2

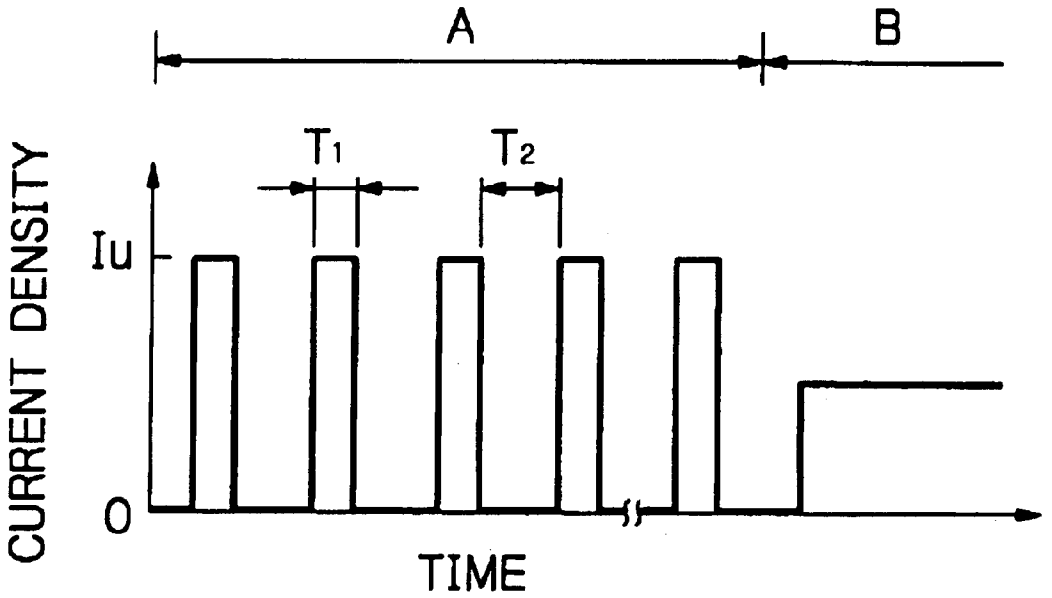

Fig. 3

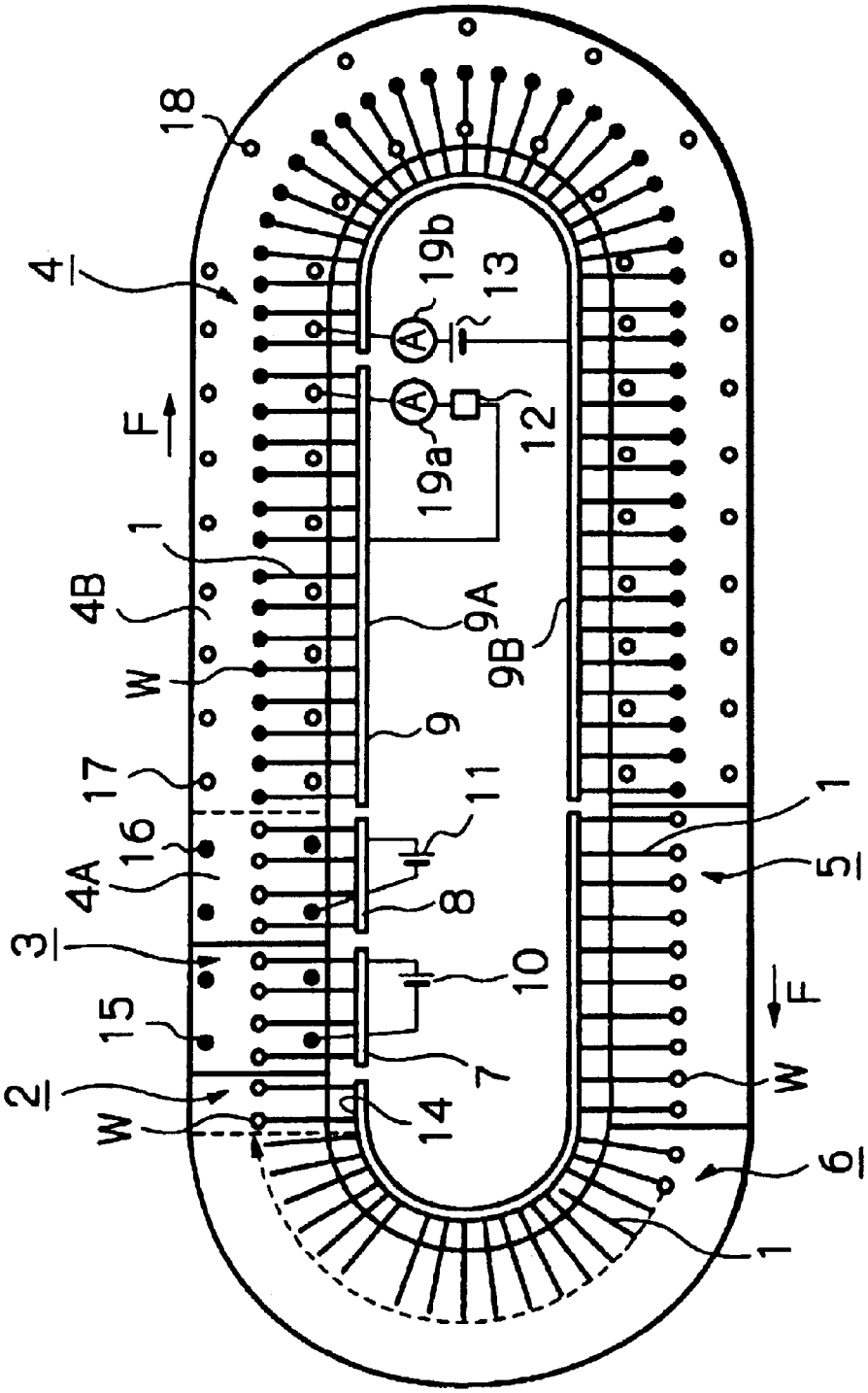

Fig. 4

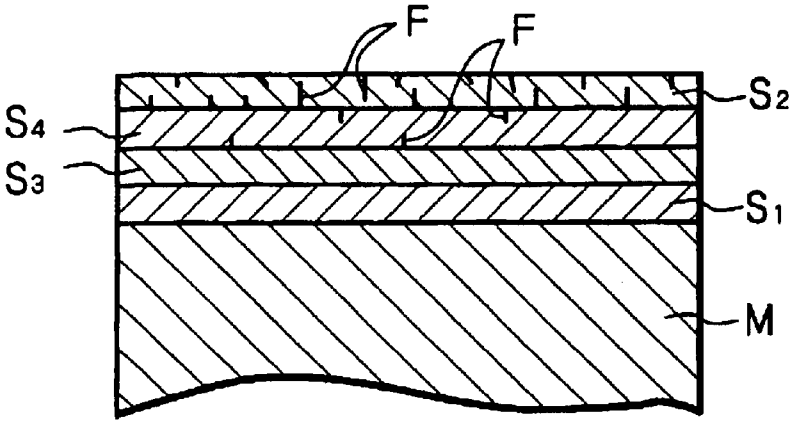

Fig. 5

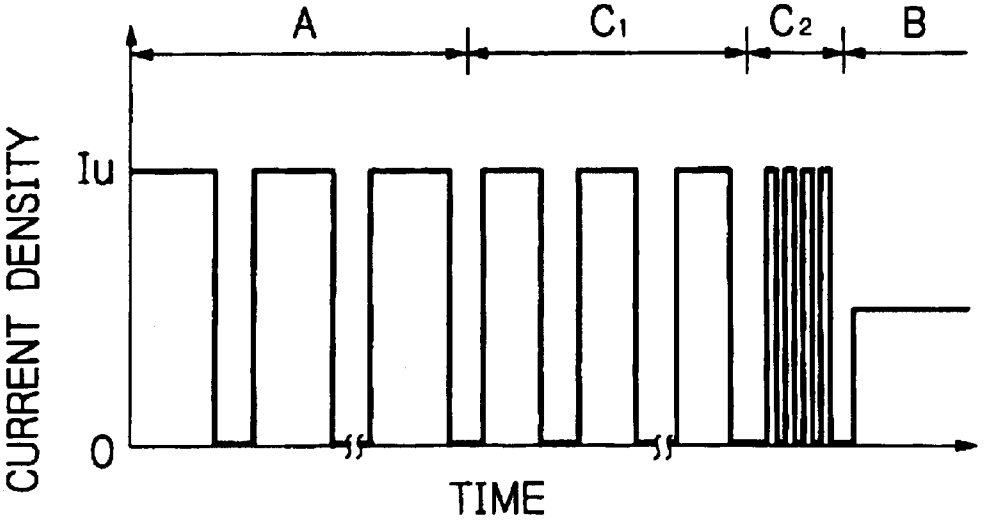

Fig. 6

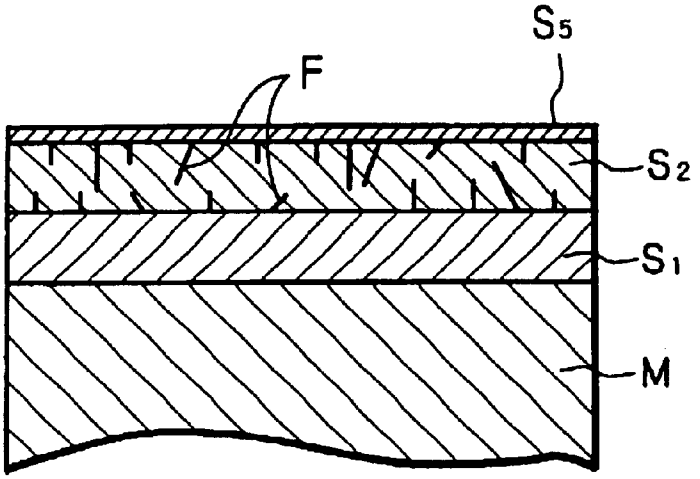

Fig. 7

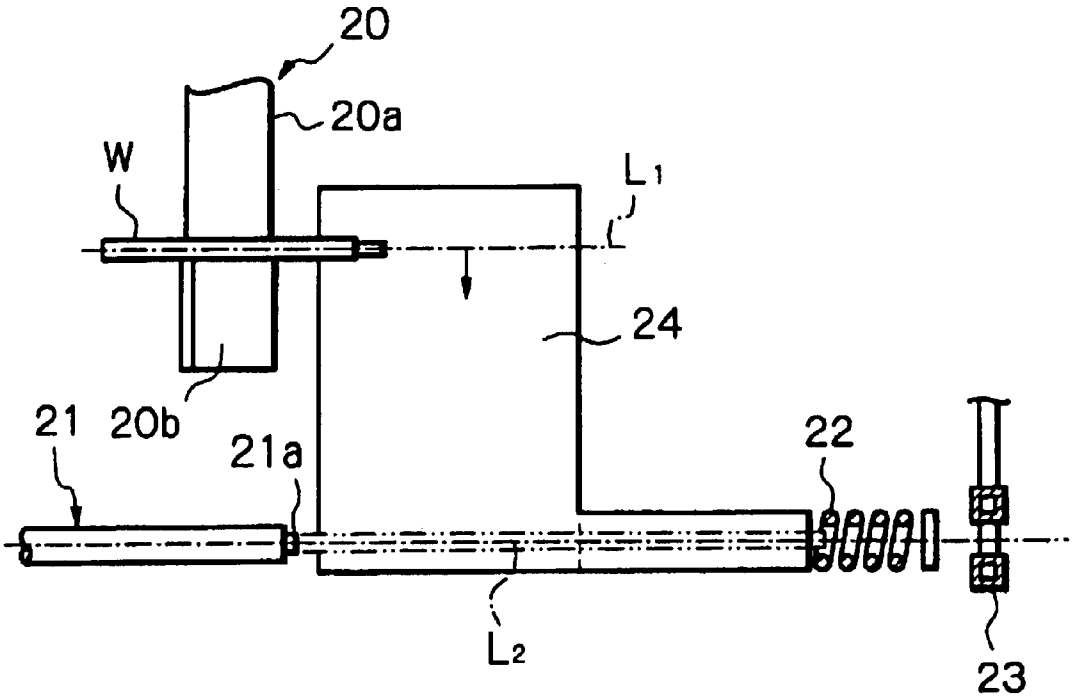

Fig. 8

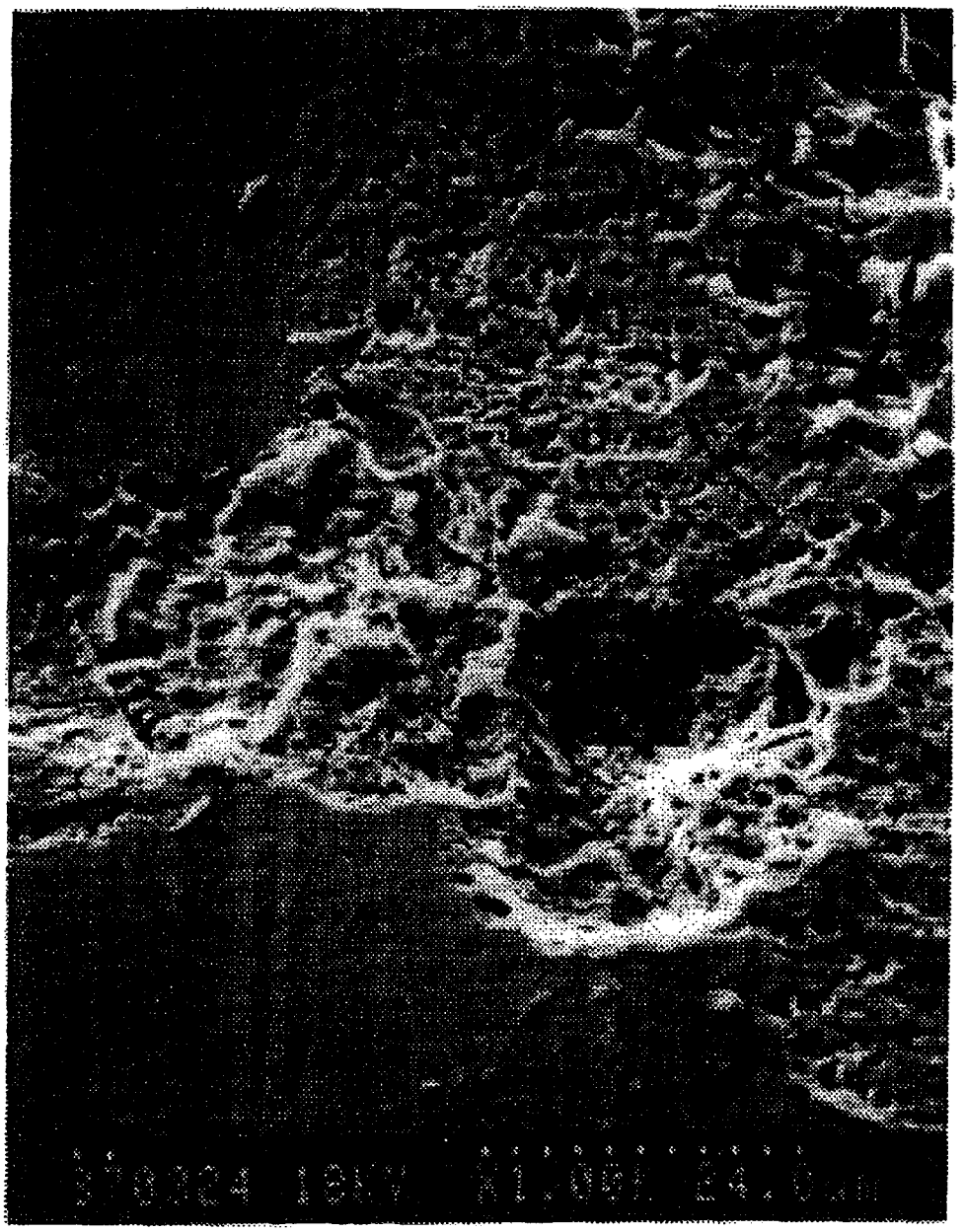

Fig. 9

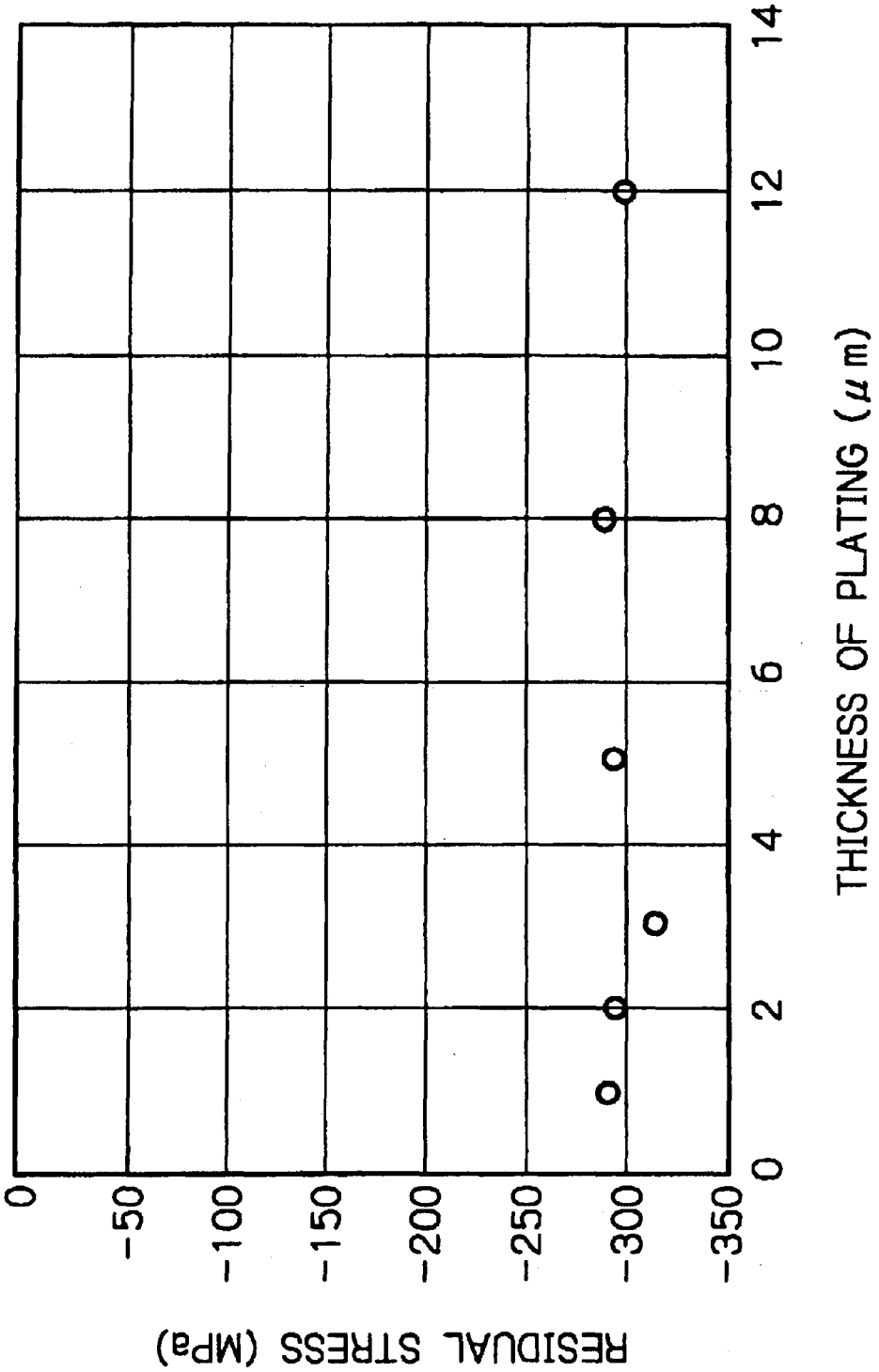
0
-50
-100
-150
-200
-250
-300
-350
RESIDUAL STRESS (MPa)
0
2
4
6
8
10
12
14
THICKNESS OF PLATING (μm)

CHROME PLATED PARTS AND CHROME PLATING METHOD

Matter enclosed in heavy brackets [ ] appears in the original patent but forms no part of this reissue specification; matter printed in italics indicates the additions made by reissue.

BACKGROUND OF THE INVENTION

The present invention relates to chrome plated parts comprising substrates having industrial chrome plating applied on the surfaces thereof. The present invention also relates to a chrome plating method and a production method for obtaining such parts.

Chrome plating, especially hard chrome plating, provides a hard metallic coating (i.e., a chrome layer) having a low coefficient of friction. Therefore, chrome plating has been widely used as industrial chrome plating for parts which are required to have high wear resistance.

With respect to general-purpose hard chrome plating, a chrome layer formed on a metallic substrate contains many cracks reaching the substrate, called channel cracks. Such a chrome layer enables a corrosive material to migrate into the metallic substrate and cause corrosion. This leads to formation of red rust when the substrate is made of steel.

In producing chrome plated parts, generally, a plated substrate is subjected to polishing, such as buffing, so as to provide a smooth surface. It is known that during polishing, cracks in a chrome layer become clogged due to the occurrence of plastic flow over the surface of the chrome layer. Therefore, in producing general-purpose chrome plated parts, after polishing, no special measures have been taken to prevent rusting.

However, when a chrome layer is subject to thermal hysteresis, contraction of the chrome layer occurs. In this case, cracks which have been clogged due to plastic flow in the chrome layer are caused to open. Consequently, parts which are used at temperatures higher than room temperature (for example, at 120° C. for 100 hours or more) are likely to suffer a lowering in corrosion resistance.

As a countermeasure, it has been attempted to conduct nickel plating or copper plating as a pretreatment, to thereby form a lower layer having a thickness almost equal to that of a chrome layer to be formed, and conducting hard chrome plating on the lower layer. However, in this countermeasure, a plating process must be conducted in two steps, leading to low productivity and high process costs.

As another countermeasure, it has been proposed to conduct chrome plating by using two different plating baths, to thereby deposit two chrome layers having different crystal orientations, thus preventing the formation of cracks reaching the substrate [reference is made to, for example, Unexamined Japanese Patent Application Public Disclosure (Kokai) No. 4-350193]. However, this countermeasure also requires a two-step plating process.

Further, there is a method of conducting electro-plating with a pulse current, so-called pulse plating, so as to obtain a crack-free chrome layer [reference is made to, for example, Unexamined Japanese Patent Application Public Disclosure (Kokai) No. 3-207884]. However, the chrome layer formed simply by pulse plating is subject to tensile residual stress. This leads to the formation of large cracks in the chrome layer due to the application of heat.

Further, there is a method of conducting pulse plating in a Sargent bath by application of an irregular pulse current, to thereby obtain a crack-free decorative chrome layer [reference is made to, for example, Examined Japanese Patent Application Publication (Kokoku) No. 43-20082]. The chrome layer obtained by this method has low (or no) stress. However, the obtained chrome layer has a stress gradient (as the thickness of the chrome layer becomes large, the value of stress shifts from a side of compressive stress toward a side of tensile stress). Therefore, average compressive stress in the chrome layer is undesirably low. Consequently, when the above-mentioned chrome layer is used as a lower layer and a cracked chrome layer is formed as an upper layer by plating on the lower chrome layer, the lower chrome layer is subject to tensile stress from the upper chrome layer, so that propagation of cracks through the upper chrome layer to the lower chrome layer occurs. Further, in the chrome plating bath in Kokoku No. 43-20082, average compressive residual stress can be increased only to a level as low as 100 MPa, even by controlling the waveform of an applied pulse current, a bath temperature and a current density.

In view of the above, the present invention has been made. It is an object of the present invention to provide chrome plated parts which maintain excellent corrosion resistance even when the chrome plated parts are subject to thermal hysteresis. It is another object of the present invention to provide a chrome plating method and a production method for efficiently obtaining such chrome plated parts.

SUMMARY OF THE INVENTION

According to the present invention, there is provided a chrome plated part comprising a substrate having a crack-free chrome layer applied on a surface thereof. The crack-free chrome layer has compressive residual stress and is formed by plating.

In the chrome plated part of the present invention in which a crack-free chrome layer having compressive residual stress is formed on a surface of the substrate, due to the compressive residual stress in the chrome layer, no formation of cracks in the chrome layer occurs. Therefore, the chrome layer maintains a crack-free structure. Consequently, the chrome plated part maintains excellent corrosion resistance even when it is subject to thermal hysteresis.

When compressive residual stress in the chrome layer is too low, the compressive residual stress changes to tensile residual stress due to the occurrence of thermal hysteresis. This leads to the formation of cracks in the chrome layer. Therefore, it is preferable for the compressive residual stress in the crack-free chrome layer to be 100 MPa or more.

Generally, when a chrome layer is subject to thermal hysteresis, the formation of cracks is likely to occur due to contraction of the chrome layer. This contraction is affected by the amount of lattice defects present in crystal grain boundaries in the chrome layer. Therefore, contraction of the chrome layer due to thermal hysteresis can be suppressed by suppressing the amount of lattice defects, that is, by increasing a crystal grain size and decreasing the length of a crystal grain boundary (the length of a crystal grain boundary is in inverse proportion to a crystal grain size). Therefore, in the chrome plated part of the present invention, it is preferred that the crystal grain size of the crack-free chrome layer be 9 nm or more.

The crystal grain size of a chrome layer formed by general-purpose hard chrome plating is as small as about 6 nm. The above-mentioned crystal grain size of the chrome layer in the present invention is much larger than this size. Therefore, the chrome layer in the present invention contains

no cracks even prior to polishing, and maintains a crack-free structure even when it is subject to thermal hysteresis. Therefore, the chrome plated part has desired corrosion resistance. When the crystal grain size is too large, a crystal structure of the chrome layer changes. Therefore, it is preferable for the crystal grain size of the crack-free chrome layer to be less than 16 nm.

In the chrome plated part of the present invention, the crack-free chrome layer may be a lower chrome layer and the chrome plated part may further comprise a cracked upper chrome layer which is formed or applied on the lower chrome layer by plating. In this case, the hardness of the upper chrome layer can be increased to a maximum level. This improves wear resistance of the chrome plated part. Further, cracks in the upper chrome layer serve as oil sumps for holding lubricating oil, leading to suppression of sliding resistance.

The chrome plated part may further comprise at least one intermediate chrome layer which is formed between the lower chrome layer and the upper chrome layer by plating. When an intermediate chrome layer is provided, direct propagation of cracks through the upper chrome layer to the lower chrome layer can be suppressed. Therefore, corrosion resistance of the chrome plated part can be stably maintained.

The chrome plated part may further comprise an oxide film containing Cr_2O_3 as an outermost layer thereof. In this case, the chrome layer itself has high corrosion resistance, so that formation of white rust can be prevented.

The present invention also provides a chrome plating method comprising the step of conducting electroplating of a work in a chrome plating bath by application of a pulse current, the chrome plating bath containing organic sulfonic acid, to thereby deposit a crack-free chrome layer on a surface of the work. The crack-free chrome layer has compressive residual stress.

In the chrome plating method of the present invention, by adjusting a pulse waveform of an applied current which alternates between a maximum current density and a minimum current density, the compressive residual stress and crystal grain size of a chrome layer can be easily controlled. Therefore, it is possible to obtain a chrome layer having a compressive residual stress of 100 MPa or more and a crystal grain size of from 9 nm to less than 16 nm.

In the chrome plating method of the present invention, the above-mentioned chrome layer may be formed as a lower chrome layer and the above-mentioned upper chrome layer or the above-mentioned intermediate and upper chrome layers may be formed on the lower chrome layer. In this case, after the chrome layer is deposited as a lower chrome layer by using the pulse plating, electroplating of the work is conducted in the same chrome plating bath as the chrome plating bath for the pulse plating, by one of adjustment of a waveform of the pulse current and application of a direct current, to thereby deposit the upper chrome layer or intermediate chrome layer efficiently.

The chrome layers may be deposited by continuous operation by continuously moving the work in the chrome plating bath or may be deposited by batchwise operation by immersing the work in the chrome plating bath.

Further, the present invention provides a method for producing a chrome plated part, comprising the steps of: conducting the above-mentioned chrome plating method for the two or more than three layers; polishing the upper surface of the work; and conducting heat oxidation, to thereby form an oxide film containing Cr_2O_3 on a surface of the chrome layer.

When the upper chrome layer containing cracks is formed by the chrome plating method of the present invention, the cracks in the upper chrome layer become clogged during polishing due to the above-mentioned plastic flow in the chrome layer. Although the cracks are caused to open again due to heat oxidation after polishing, the chrome plated part has sufficient corrosion resistance for preventing formation of red rust, because the crack-free lower chrome layer is present on the substrate. In addition, since an oxide film containing Cr_2O_3 is present as the outermost layer of the chrome plated part, corrosion of the chrome layer itself can be suppressed, thus preventing formation of white rust.

In the method of the present invention for producing a chrome plated part, the method of heat oxidation is not particularly limited. For example, heat oxidation can be conducted under the same conditions as conditions of a general-purpose baking process or by high-frequency heating. With respect to the general-purpose baking process, Federal Specification QQ-C-320a(1967. 7. 25) requires that when steel having a hardness of HRC 40 or more is used as a substrate, the baking process be conducted at 191±14° C. for 3 hours or more. By conducting heat oxidation under the above-mentioned conditions, an oxide film containing Cr_2O_3 is formed on a surface of a substrate. As a method of heat oxidation by high-frequency heating, for example, a substrate is held at a temperature as high as about 400° C. for a short period of time of from several seconds to several tens of seconds.

The foregoing and other objects, features and advantages of the present invention will be apparent from the following detailed description and appended claims taken in connection with the accompanying drawings.

BRIEF DESCRIPTION OF THE DRAWINGS

FIG. **1** is a schematic illustration of cross section showing a surface structure of a chrome plated part according to a first embodiment of the present invention.

FIG. **2** is a graph showing an example of a waveform of a pulse current in a chrome plating process for obtaining the chrome plated part of FIG. **1**.

FIG. **3** is a top view schematically showing a structure of a plating apparatus used in the method of the present invention.

FIG. **4** is a schematic illustration showing a surface structure of a chrome plated part according to a second embodiment of the present invention.

FIG. **5** is a graph showing an example of a waveform of a pulse current in a chrome plating process for obtaining the chrome plated part of FIG. **4**.

FIG. **6** is a schematic illustration showing a surface structure of a chrome plated part according to a third embodiment of the present invention.

FIG. **7** is a top view schematically showing a structure of a system including polishing and heating apparatuses for obtaining the chrome plated part of FIG. **6**.

FIG. **8** is a microphotograph showing white rust formed in Examples.

FIG. **9** is a graph showing a relationship between a thickness of plating and residual stress in the chrome plated part of the present invention.

DETAILED DESCRIPTION OF THE INVENTION

Hereinbelow, embodiments of the present invention are explained, with reference to the drawings.

FIG. **1** shows a chrome plated part according to a first embodiment of the present invention. The chrome plated part comprises: a steel substrate M; a crack-free lower chrome layer S_1 formed by plating on a surface of the substrate M; and a multicracked upper chrome layer S_2 formed by plating on the lower chrome layer S_1. The cracks in the chrome layer S_2 are designated by a reference character F. The lower chrome layer S_1 has a compressive residual stress of 100 MPa or more and has a crystal grain size of from 9 nm to less than 16 nm. The upper chrome layer S_2 has a compressive residual stress less than 100 MPa or a tensile residual stress and has a crystal grain size less than 9 nm.

In the above-mentioned chrome plated part, the crack-free lower chrome layer S_1 is present below the upper chrome layer S_2. Therefore, although the cracks F are present in the upper chrome layer S_2, a corrosive material does not migrate into the substrate M, so that a desired corrosive resistance of the chrome plated part can be ensured. Further, the lower chrome layer S_1 has a predetermined compressive residual stress and a predetermined crystal grain size, so that the lower chrome layer S_1 maintains a crack-free structure even when it is subject to thermal hysteresis, to thereby ensure excellent corrosion resistance of the chrome plated part. In addition, since the upper chrome layer S_2 may contain cracks such as the cracks F, the hardness of the upper chrome layer S_2 can be increased to a sufficiently high level (900 HV or more), to thereby impart the chrome plated part with sufficient wear resistance. Further, the cracks F present in the upper chrome layer S_2 serve as oil sumps for holding lubricating oil, which enhances sliding properties of the chrome plated part.

The chrome layers S_1 and S_2 are formed by a two-step plating process in a chrome plating bath containing organic sulfonic acid. The two-step plating process comprises plating utilizing a pulse current (hereinafter, frequently referred to as "pulse plating") and plating utilizing a direct current (hereinafter, frequently referred to as "general-purpose plating"). An example of a current density pattern of an applied current for this process is shown in FIG. **2**.

As the chrome plating bath containing organic sulfonic acid, it is preferred to use a chrome plating path described in Examined Japanese Patent Application Publication (Kokoku) No. 63-32874, which has compositions as shown in Table 1.

TABLE 1

Component	Amount (g/L) Suitable	Preferable
Chromic acid	100-450	200-300
Sulfuric acid	1-5	1.5-3.5
Organic sulfonic acid	1-18	1.5-12
Boric acid	0-40	4-30

Referring to FIG. **2**, a zone A indicates a region for the pulse plating for forming the chrome layer S_1 and a zone B indicates a region for the general-purpose plating for forming the upper chrome layer S_2. In the zone A, the applied current alternates between two current densities, namely, a maximum current density I_U and a minimum current density I_L. The maximum current density I_U is held for a predetermined time period T_1 and the minimum current density I_L is held for a predetermined time period T_2. In the example of FIG. **2**, the minimum current density I_L is set to zero (off). However, needless to say, the minimum current density I_L may be arbitrarily set to a value between the maximum current density I_U and zero. Further, the values of the time periods T_1 and T_2 may be set as being the same or different. In the first embodiment, for pulse plating, the maximum current density I_U, the minimum current density I_L (I_L=0 in this example), the time period T_1 at the maximum current density I_U and the time period T_2 at the minimum current density I_L are set to appropriate values, to thereby obtain the lower chrome layer S_1 (FIG. **1**) having a predetermined compressive residual stress and a predetermined crystal grain size.

FIG. **3** shows an example of an apparatus for obtaining a chrome plated part having the above-mentioned two chrome layers S_1 and S_2. In FIG. **3**, works (such as piston rods) W are suspended from endlessly movable hangers **1**. A mounting station **2**, an alkali electrolytic degreasing tank **3**, a plating tank **4**, a cleaning tank **5** and a removing station **6** are arranged in this order below a line of movement of the hangers **1**. The plating tank **4** comprises an etching process tank **4**A disposed adjacent to the alkali electrolytic degreasing tank **3** and a plating process tank **4**B adjacent to the etching process tank **4**A. The plating process tank **4**B contains the above-mentioned chrome plating bath containing organic sulfonic acid.

Separate bus bars **7**, **8** and **9** are arranged along the alkali electrolytic degreasing tank **3**, the etching process tank **4**A and the plating process tank **4**B, respectively. The bus bar **9** extending along the plating process tank **4**B comprises a front bus bar **9**A on a side of the etching process tank **4**A and a rear bus bar **9**B on a side of the cleaning tank **5**. The bus bar **7** corresponding to the alkali electrolytic degreasing tank **3**, the bus bar **8** corresponding to the etching process tank **4**A and the rear bus bar **9**B corresponding to the plating process tank **4**B are connected to direct current sources **10**, **11** and **13**, respectively. The front bus bar **9**A corresponding to the plating process tank **4**B is connected to a pulse current source **12**.

The hangers **1** have feeding brushes **14**. The feeding brushes **14** are brought into sliding contact with the bus bars **7**, **8**, **9**A and **9**B, so that a current is equally applied from the current sources **10**, **11**, **12** and **13** to each of the hangers **1**. In each of the alkali electrolytic degreasing tank **3** and the etching process tank **4**A, a plurality of cathodes connected in parallel are provided. The cathodes in the alkali electrolytic degreasing tank **3** and the cathodes in the etching process tank **4**A are designated by reference numerals **15** and **16**, respectively. The plating process tank **4**B contains a plurality of anodes **17** corresponding to the front bus bar **9**A, which are connected in parallel, and a plurality of anodes **18** corresponding to the rear bus bar **9**B, which are also connected in parallel. The current sources **10** and **11** apply currents to the corresponding cathodes **15** and **16**, and the current sources **12** and **13** apply currents to the corresponding anodes **17** and **18**. In the plating process tank **4**B, ammeters **19**a and **19**b are provided between the anode **17** and the current source **12** and between the anode **18** and the current source **13**, respectively.

In order to conduct a chrome plating process using the above-mentioned apparatus, the works W are mounted on the hangers **1** in the mounting station **2**. The works W are moved successively to the alkali electrolytic degreasing tank **3** and the etching process tank **4**A while being suspended from the hangers **1**. In the alkali electrolytic degreasing tank **3**, a degreasing process is conducted while making the works W anode. In the etching process tank **4**A, an etching process is conducted while making the works W anode. Subsequently, the works W are moved to the plating process

tank **4**B, where a chrome plating process is conducted while making the works W cathode.

In the chrome plating process, a current having a pulse waveform, such as that indicated in the zone A of FIG. **2**, is applied from the current source **12** to the works W through the front bus bar **9**A and the anodes **17**, to thereby conduct pulse plating. Pulse plating is continued while the feeding brushes **14** of the hangers **1** (from which the works W are suspended) are in contact with the front bus bar **9**A. Consequently, the crack-free lower chrome layer S_1 (FIG. **1**) is formed on a surface of each work W. Subsequently, the feeding brushes **14** of the hangers **1** (from which the works W are suspended) move onto the rear bus bar **9**B, and general-purpose plating is conducted by application of a direct current from the current source **13** to the works W through the rear bus bar **9**B and the anodes **18**. General-purpose plating is continued while the feeding brushes **14** of the hangers **1** (from which the works W are suspended) are in contact with the rear bus bar **9**B. Consequently, the multicracked chrome layer S_2 having the cracks F is formed on the lower chrome layer S_1 in a superimposed manner as shown in FIG. **1**. Thereafter, the works W are cleaned with water in the cleaning tank **5** and moved to the removing station **6**, where the works W are removed from the hangers **1**.

In the above-mentioned chrome plating process, the two chrome layers S_1 and S_2 can be formed by continuously moving the works W in the same chrome plating bath. Therefore, chrome plated parts having excellent corrosion resistance and heat resistance can be produced efficiently.

In the above-mentioned embodiment, hard chrome plating is conducted in two steps so as to form the two chrome layers S_1 and S_2. However, in the present invention, the upper chrome layer S_2 may be omitted and only the chrome layer S_1 may be formed on the work W. In this case, the crack-free chrome layer S_1 is exposed to the outside and there is no oil sump for holding lubricating oil as in the case of the upper chrome layer S_2 being formed on the lower chrome layer S_1. However, the chrome layer S_1 is satisfactory in terms of corrosion resistance.

Further, in the first embodiment, the lower chrome layer S_1 and the upper chrome layer S_2 are formed by continuous operation using the apparatus shown in FIG. **3**. However, in the present invention, a single plating tank containing a chrome plating bath may be prepared and the lower chrome layer S_1 and the upper chrome layer S_2 may be formed by batchwise operation using this plating tank. In this case, an output of a current source is controlled by means of a controller so that a desired current density pattern of an applied current, such as that shown in FIG. **2**, can be obtained.

For batchwise operation, instead of using a single plating tank, a plating tank for forming the lower chrome layer S_1 and a plating tank for forming the upper chrome layer S_2 may be separately provided, and the lower chrome layer S_1 and the upper chrome layer S_2 may be formed by applying a pulse current to the plating tank for forming the lower chrome layer S_1 and applying a direct current to the plating tank for forming the upper chrome layer S_2.

FIG. **4** shows a chrome plated part according to a second embodiment of the present invention. A feature of this embodiment resides in that two intermediate chrome layers S_3 and S_4 are provided between the lower chrome layer S_1 and the upper chrome layer S_2. The properties of the intermediate chrome layers S_3 and S_4 are not particularly limited. However, it is preferred that the intermediate chrome layer S_3 on a side of the lower chrome layer S_1 has properties similar to those of the lower chrome layer S_1 and the intermediate chrome layer S_4 on a side of the upper chrome layer S_2 has properties similar to those of the upper chrome layer S_2. Therefore, a few cracks F may be present in the intermediate chrome layer S_4.

By providing the intermediate chrome layers S_3 and S_4 between the lower chrome layer S_1 and the upper chrome layer S_2, direct propagation of cracks from the upper chrome layer S_2 to the lower chrome layer S_1 can be suppressed, so that corrosion resistance of the chrome plated part can be stably maintained. Although the two intermediate layers S_3 and S_4 are provided in this embodiment, the number of intermediate chrome layers is not specifically limited in the present invention. A single intermediate layer or three or more intermediate layers may be provided.

A chrome plated part in the second embodiment of the present invention can be obtained by, for example, setting zones C_1 and C_2 between the above-mentioned zones A and B (FIG. **2**) as shown in FIG. **5** and setting a waveform of a pulse current in the zones C_1 and C_2 to the pattern different from that in the zone A. With respect to an apparatus for obtaining the chrome plated part in the second embodiment, substantially the same apparatus as the apparatus of FIG. **3** can be used, except that the front bus bar **9**A (FIG. **3**) corresponding to the plating process tank **4**B is divided into a plurality of bus bars which are connected to different pulse current sources **12**.

FIG. **6** is a chrome plated part according to a third embodiment of the present invention. A feature of this embodiment resides in that an oxide film S_5 containing Cr_2O_3 as a main component is formed as an outermost layer of the chrome plated part. The oxide film S_5 is formed by conducting a heat oxidation process after polishing (buffing) of the upper chrome layer S_2. Due to the presence of the oxide film S_5 as the outermost layer of the chrome plated part, corrosion resistance of the upper chrome layer S_2 itself can be improved, to thereby prevent formation of white rust which is caused by corrosion of the chrome layer.

In the present invention, the oxide film may be formed solely from Cr_2O_3. Needless to say, when the oxide film contains not only Cr_2O_3, but also a component other than Cr_2O_3 in a small amount, the oxide film is still satisfactory in terms of strength.

In order to conduct polishing and heat oxidation, an apparatus such as shown in FIG. **7** can be employed. This apparatus comprises a primary line L_1 of production; a centerless polishing disk apparatus **20** provided in the primary line L_1; a secondary line L_2 of production provided in parallel to the primary line L_1; a pusher **21**, a high-frequency coil **22** and a cooling coil **23** provided in the secondary line L_2; and an inclined stand-by member **24** connected to the primary line L_1 and the secondary line L_2. The centerless polishing disk apparatus **20** comprises a buff wheel **20**a and a regulating wheel **20**b. After completion of the chrome plating process, the work W is polished between the buff wheel **20**a and the regulating wheel **20**b of the centerless polishing disk apparatus **20** and rolls on the inclined stand-by member **24** to the secondary line L_2, where the work W is continuously moved through the high-frequency coil **22** and the cooling coil **23** by extension of a rod **21**a of the pusher **21**. Thus, polishing and heat oxidation can be efficiently conducted.

EXAMPLE 1

Using rods (diameter: 12.5 mm; length: 200 mm) made of steel (JIS S25C) as test pieces, and a chrome plating bath

comprising 250 g/L of chromic acid, 2.5 g/L of sulfuric acid, 8 g/L of organic sulfonic acid and 10 g/L of boric acid, pulse plating was conducted under the following conditions: bath temperature=60° C.; maximum current density I_U=120 A/dm^2; minimum current density I_L=0 A/dm^2 (the same as in the case of FIG. **2**); pulse time (on-time) T_1 at maximum current density I_U=100 to 800 μs; pulse time (off-time) T_2 at minimum current density I_L=100 to 500 μs; and frequency=0.8 to 5.0 kHz. As a result, a crack-free lower chrome layer S_1 (FIG. **1**) having a thickness of about 3 μm was formed on a surface of each test piece. Subsequently, in the same chrome plating bath, general-purpose plating was conducted at a bath temperature of 60° C. and a current density of 60 A/dm^2. As a result, an upper chrome layer S_2 (FIG. **1**) having a thickness of about 10 μm was formed on the lower chrome layer S_1 on each test piece, to thereby obtain samples 2 to 18 (as shown in Table 2). Further, for reference, using the same test piece and chrome plating bath as mentioned above, general-purpose hard chrome plating was conducted at a bath temperature of 60° C. and a current density of 60 A/dm^2. As a result, a single chrome layer having a thickness of about 20 μm was formed on a surface of the test piece, to thereby obtain a sample 1.

With respect to the samples 2 to 18, a surface hardness (HV) was measured and visual observation was made by using a microscope to evaluate formation of cracks in each of the lower and upper chrome layers S_1 and S_2 after deposition. Further, with respect to the lower chrome layer S_1, residual stress and crystal grain size were measured as mentioned below. Further, the samples 2 to 18 were subjected to a salt-spray test in accordance with JIS Z2371, and visually observed to evaluate occurrence of rusting. With respect to the samples in which no rusting was observed, they were subjected to heat treatment at 200° C. for 2 hours. The resultant samples were visually observed to evaluate formation of cracks on each of the lower and upper chrome layers S_1 and S_2 in the above-mentioned manner, and were subjected to the salt-spray test in accordance with JIS Z2371 again to evaluate occurrence of rusting. The color of a surface to each of the samples 2 to 18 was observed at the time of completion of formation of the lower chrome layer S_1. The above-mentioned measurements and observations were also conducted with respect to the single chrome layer of the sample 1.

Measurement of residual stress in the chrome layer was conducted by a method called "X-Sen Ouryoku Sokuteihou (X-ray stress measurement method)" disclosed in "Hihakai Kensa (non-destructive inspection)", vol. 37, item 8, pages 636 to 642, edited by The Japanese Society for Non-destructive Inspection. Measurement of a crystal grain size of the chrome layer was conducted using an X-ray diffractometer, by using a characteristic X-ray Cu-Kα (wavelength: 1.5405620 Å) with respect to the Cr (222) diffraction plane. In this measurement, the crystal grain size was determined by assigning the result of measurement of the width (integral width) of a diffraction profile to the following Scherrer's equation. As the integral width, a value corrected by a Cauchy function was used.

$$D_{hkl}=K\cdot\lambda/\beta_1\cos\theta$$

wherein

D_{hkl}: crystal grain size (Å) [measured in a direction perpendicular to (hkl)]

λ: wavelength of an X-ray for measurement (Å)

β_1: width (integral width) of a diffraction beam dependent on the crystal grain size (rad)

θ: Bragg angle of the diffraction beam

K: constant (1.05)

Results of the above-mentioned measurements and observations are shown in Table 2.

TABLE 2 (1)

Sample No.	Pulse time (μs) T_1	Pulse time (μs) T_2	Crystal grain size of S_1 (nm)	Cracking of S_1 after deposition	Residual stress (MPa)	Hardness (HV)	Appearance of S_1	Rusting: Before heat treatment	Rusting: After heat treatment	Evaluation
1 (Comparative)			6.1	Observed	+230	1,090	Glossy	Observed (2 h)		NG
2 (Comparative)	100	100	7.8	Observed	+276	1,034	Glossy	Observed (24 h)		NG
3 (Comparative)	200	100	8.0	Observed	+160	1,017	Glossy	Observed (24 h)		NG
4 (Comparative)	150	150	8.2	Observed	+10	940	Glossy	Observed (96 h)		NG
5 (Comparative)	200	200	8.7	Not observed	−65	920	Glossy	Not observed (300 h)	Observed (24 h)	NG
6 (Present invention)	150	200	9.6	Not observed	−150	870	Glossy	Not observed (300 h)	Not observed (300 h)	OK
7 (Present invention)	100	200	9.8	Not observed	−203	835	Glossy	Not observed (300 h)	Not observed (300 h)	OK
8 (Present invention)	110	220	10.1	Not observed	−220	840	Glossy	Not observed (300 h)	Not observed (300 h)	OK
9 (Present invention)	800	300	10.5	Not observed	−205	818	Glossy	Not observed (300 h)	Not observed (300 h)	OK
10 (Present invention)	400	300	10.6	Not observed	−305	782	Glossy	Not observed (300 h)	Not observed (300 h)	OK
11 (Present invention)	200	300	11.1	Not observed	−339	742	Glossy	Not observed (300 h)	Not observed (300 h)	OK
12 (Present invention)	300	300	11.7	Not observed	−313	710	Glossy	Not observed (300 h)	Not observed (300 h)	OK
13 (Present invention)	600	400	12.3	Not observed	−323	681	Glossy	Not observed (300 h)	Not observed (300 h)	OK
14 (Present invention)	500	400	13.5	Not observed	−334	630	Glossy	Not observed (300 h)	Not observed (300 h)	OK
15 (Present invention)	400	400	15.4	Not observed	−272	602	Glossy	Not observed (300 h)	Not observed (300 h)	OK
16 (Comparative)	300	400	16.0	Observed	+30	546	Milky	Observed (96 h)		NG
17 (Comparative)	600	500	16.7	Observed	+53	498	Milky	Observed (96 h)		NG
18 (Comparative)	700	500	18.1	Observed	+18	450	Milky	Observed (96 h)		NG

As shown in Table 2, with respect to the sample 1 (comparative) obtained by general-purpose hard chrome plating, the chrome layer contained many cracks and rusting was observed over an entire surface of the chrome layer at an extremely early time (2 hours) in the salt-spray test.

The samples 2 to 18 were obtained by the two-step plating process. Of these, with respect to the samples 2 to 4 and 16 to 18 (comparative), at the time of completion of the plating process, the upper chrome layer S_2 contained many cracks and the lower chrome layer S_1 was also cracked. When the samples 2 to 4 and 16 to 18 were subjected to the salt-spray test after the plating process, rusting was observed at a relatively early time (24 to 96 hours) in the salt-spray test.

Thus, with respect to the samples 2 to 4 and 16 to 18, rusting occurred in the salt-spray test before heat treatment. Therefore, no heat treatment was conducted with respect to these samples.

On the other hand, with respect to the samples 5 to 15 also obtained by the two-step plating process, at the time of completion of the plating process, the upper chrome layer S_2 contained many cracks, but no cracking was observed in the lower chrome layer S_1. Further, with respect to the samples 5 to 15, no rusting was observed until 300 hours after the start of the salt-spray test.

With respect to the samples 5 to 15 in which no rusting was observed before heat treatment, they were subjected to heat treatment at 200° C. for 2 hours and visually observed to evaluate formation of cracks and occurrence of rusting. With respect to the sample 5 (comparative), cracking was observed in the lower chrome layer S_1 and rusting occurred at a relatively early time (24 hours) in the salt-spray test. On the other hand, with respect to the samples 6 to 15 (present invention), no cracking was observed in the lower chrome layer S_1 even after heat treatment and no rusting was observed until 300 hours after the start of the salt-spray test.

Comparison was made between the samples 1 to 18 with respect to residual stress in the lower chrome layer S_1 (the single chrome layer in the case of the sample 1). With respect to the samples 1 to 4 and 16 to 18 (comparative), the residual stress was tensile residual stress. With respect to the samples 5 to 15, the residual stress was compressive residual stress. Especially, the samples 6 to 15 (present invention) had a large compressive residual stress of 150 MPa or more.

Further, comparison was made between the samples 1 to 18 with respect to a crystal grain size of the lower chrome layer S_1 (the single chrome layer in the case of the sample 1). With respect to the samples 1 to 5 (comparative), the crystal grain size was less than 9 nm. With respect to the samples 6 to 18, the crystal grain size was 9 nm or more. In each of the samples 16 to 18, the chrome layer had an especially large crystal grain size of 16 nm or more.

With respect to the surface hardness (HV), the surface hardness of the sample 1 (obtained by general-purpose hard plating) was the highest. With respect to the remaining samples, the larger the crystal grain size, the lower the surface hardness.

Further, comparison was made between the samples 1 to 18 with respect to the color of a surface of the lower chrome layer S_1 (with single chrome layer in the case of the sample 1). With respect to the samples 1 to 15, the chrome layer had a glossy surface characteristic of chrome plating. With respect to the samples 16 to 18, the chrome layer had a milky surface.

From the above, it is apparent that formation of cracks in the chrome layer is dependent on the residual stress and the crystal grain size of the chrome layer. In order to ensure a desired corrosion resistance of the chrome plated part by suppressing cracking of the chrome layer even when it is subject to thermal hysteresis, it is necessary to conduct the chrome plating process so that the lower chrome layer S_1 having a compressive residual stress of 150 MPa or more, and preferably having a crystal grain size of 9 nm or more can be obtained. The compressive residual stress which can be obtained solely by adjusting the waveform of a pulse current is limited. Therefore, an appropriate waveform of a pulse current must be selected, depending on the intended applications of the chrome plated part. With respect to the crystal grain size, the lower chrome layer of each of the samples 16 to 18, which had a crystal grain size of 16 nm or more, had tensile residual stress. Therefore, it is preferred that the crystal grain size be less than 16 nm.

EXAMPLE 2

Using the same test piece and chrome plating bath as used in Example 1, pulse plating was conducted under the following conditions: bath temperature=60° C.; maximum current density I_U=120 A/dm^2; minimum current density I_L=0 A/dm^2; pulse time (on-time) T_1 at maximum current density I_U=1,400 μs; pulse time (off-time) T_2 at minimum current density I_L=600 μs; and frequency=500 Hz. As a result, a lower chrome layer S_1 (FIG. **4**) having a thickness of about 2 μm was formed on a surface of the test piece. Subsequently, in the same chrome plating bath, pulse plating was conducted under the following conditions: bath temperature=60° C.; maximum current density I_U=120 A/dm^2; minimum current density I_L=0 A/dm^2; on-time T_1=1,400 μs; off-time T_2=400 μs; and frequency=625 Hz. As a result, an intermediate chrome layer S_3 (FIG. **4**) having a thickness of about 2 μm was formed on a surface of the lower chrome layer S_1. Subsequently, in the same chrome plating bath, pulse plating was conducted under the following conditions: bath temperature=60° C.; maximum current density I_U=120 A/dm^2; minimum current density I_L=0 A/dm^2; on-time T_1=200 μs; off-time T_2=100 μs; and frequency=3,333 Hz. As a result, an intermediate chrome layer S_4 (FIG. **4**) having a thickness of about 2 μm was formed on a surface of the intermediate chrome layer S_3. Subsequently, in the same chrome plating bath, general-purpose plating was conducted at a bath temperature of 60° C. and a current density of 60 A/dm^2. As a result, an upper chrome layer S_2 (FIG. **4**) having a thickness of about 5 μm was formed on the intermediate chrome layer S_4, to thereby obtain a sample.

With respect to the obtained sample, each of the lower chrome layer S_1, the intermediate chrome layers S_3 and S_4 and the upper chrome layer S_2 was visually observed by using a microscope to evaluate formation of cracks. Further, by the same methods as mentioned above in Example 1, residual stress and crystal grain size were measured with respect to each of the chrome layers S_1 to S_4. The sample was subjected to the salt-spray test in accordance with JIS Z2371, and visually observed to evaluate occurrence of rusting. After the salt-spray test, the sample was subjected to heat treatment at 200° C. for 2 hours, and subjected to the salt-spray test in accordance with JIS Z2371 again. The resultant sample was visually observed to evaluate occurrence of rusting. Results of the above-mentioned measurements and observations are shown in Table 3.

TABLE 3

		Crystal		Rusting	
Chrome layer	Residual stress (MPa)	grain size (nm)	Cracking after deposition	Before heat treatment	After heat treatment
S_1	−279	12.2	Not observed	Not observed	Not observed
S_3	−163	10.7	Not observed		
S_4	+226	8.0	Slightly observed		
S_2	+300	6.6	Observed		

As shown in Table 3, no cracking was observed with respect to the lower chrome layer S_1 and the intermediate chrome layer S_3. The intermediate chrome layer S_4 on a side of the upper chrome layer S_2 was slightly cracked and the upper chrome layer S_2 contained many cracks. With respect to the residual stress, each of the lower chrome layer S_1 and the intermediate chrome layer S_3 had compressive residual

stress as large as more than 150 MPa. Each of the intermediate chrome layer S_4 and the upper chrome layer S_2 had tensile residual stress. With respect to the crystal grain size, the crystal grain size of each of the lower chrome layer S_1 and the intermediate chrome layer S_3 was as large as more than 9 nm. The crystal grain size of each of the intermediate chrome layer S_4 and the upper chrome layer S_2 was much smaller than 9 nm.

No rusting was observed in the salt-spray test before and after heat treatment. Therefore, it was understood that the sample had sufficient corrosion resistance.

EXAMPLE 3

Using the same test pieces and chrome plating bath as used in Example 1, pulse plating was conducted under the following conditions: bath temperature=60° C.; maximum current density I_U=120 A/dm^2; minimum current density I_L=0 A/dm^2; pulse time (on-time) T_1 at maximum current density I_U=300 μs; pulse time (off-time) T_2 at minimum current density I_L=300 μs; and frequency: 1.7 kHz. As a result, a crack-free lower chrome layer S_1 (FIG. **1**) having a thickness of about 3 μm was formed on a surface of each test piece. Subsequently, in the same chrome plating bath, general-purpose plating was conducted at a bath temperature of 60° C. and a current density of 60 A/dm^2. As a result, a cracked upper chrome layer S_2 (FIG. **1**) having a thickness of about 10 μm was formed on the lower chrome layer S_1 on each test piece. The upper chrome layer S_2 was finished by buffing so as to have a surface roughness Ra of 0.08 μm. As a result, samples 31 and 32 were obtained. The sample 31 was subjected to a general-purpose baking process at 210° C. for 4 hours, to thereby form an oxide film (containing Cr_2O_3 as a main component) on the upper chrome layer S_2. The sample 32 was subjected to high-frequency heating at a maximum heating temperature of 400° C. for a short period of time (about 10 seconds), to thereby form an oxide film (containing Cr_2O_3 as a main component) on the upper chrome layer S_2.

For comparison, using the same test piece and chrome plating bath as used in Example 1, pulse plating was conducted under the following conditions: bath temperature=60° C.; maximum current density I_U=120 A/dm^2; minimum current density I_L=0 A/dm^2; on-time T_1=200 μs; off-time T_2=200 μs; and frequency=2.5 kHz. As a result, a crack-free lower chrome layer S_1 having a thickness of about 3 μm was formed on a surface of the test piece. Subsequently, in the same chrome plating bath, general-purpose plating was conducted at a bath temperature of 60° C. and a current density of 60 A/dm^2. As a result, a cracked upper chrome layer S_2 having a thickness of about 10 μm was formed on a surface of the lower chrome layer S_1, to thereby obtain a sample 33. The sample 33 was subjected to the above-mentioned buffing and high-frequency heating. Further, for comparison, substantially the same procedure for obtaining the sample 31 was repeated, except that the baking process was conducted before buffing, to thereby obtain a sample 34.

With respect to each of the samples 31 to 34, residual stress and crystal grain size of the lower chrome layer S_1 were measured by the same methods as mentioned above in Example 1. The samples 31 to 34 were subjected to the salt-spray test in accordance with JIS Z2371, and visually observed to evaluate formation of red rust and white rust. Results of the above-mentioned measurements and observations are shown in Table 4.

TABLE 4

Sample No.	Process	Crystal grain size of S_1 (nm)	Residual stress of S_1 (MPa)	Method of heat oxidation	Rusting	
					White rust	Red rust
31	Plating-Polishing-Oxidation	11.7	−313	Baking	Not observed	Not observed
32	Plating-Polishing-Oxidation	11.7	−313	High-frequency heating	Not observed	Not observed
33	Plating-Polishing-Oxidation	8.7	−65	High-frequency heating	Not observed	Observed
34	Plating-Oxidation-Polishing	8.7	−65	Baking	Observed	Not observed

As shown in Table 4, in each of the samples 31 and 32, the lower chrome layer S_1 had sufficiently large compressive residual stress and a sufficiently large crystal grain size. On the other hand, in each of the samples 33 and 34, the lower chrome layer S_1 had undesirably low compressive residual stress and an undesirably small crystal grain size.

After the salt-spray test, with respect to each of the samples 31 and 32 (present invention), red rust which forms due to corrosion of a metallic substrate and white rust which forms due to corrosion of the chrome layer were not observed. On the other hand, red rust was observed in the sample 33 (comparative) and white rust was observed in the sample 34 (comparative). Red rust was observed in the sample 33 because both of the lower chrome layer S_1 and the upper chrome layer S_2 contained cracks. White rust was observed in the sample 34 because the oxide film formed by the baking process was removed by buffing. FIG. **8** is a microphotograph showing white rust formed in the sample 34. No red rust was observed in the sample 34 because, during buffing, the cracks were clogged due to the occurrence of plastic flow in the chrome layer.

FIG. **9** is a graph showing a relationship between the thickness of plating and residual stress in the chrome plated part of the present invention when pulse plating is conducted by application of the same pulse current as used for obtaining the sample 12. In the graph, there is substantially no stress gradient such as that shown in the above-mentioned Examined Japanese Patent Application Publication No. 43-20082. Average compressive residual stress is stably maintained at a level of 100 MPa or more.

As has been described above, the chrome plated part of the present invention maintains excellent corrosion resistance even when it is subject to thermal hysteresis. Therefore, the present invention is advantageous when applied to products used in corrosive environments and under high temperature conditions. The chrome plated part of the present invention is especially advantageous when it comprises a crack-free chrome layer provided as the lowermost chrome layer and a cracked chrome layer provided as the uppermost chrome layer, because such a chrome plated part has excellent wear resistance and excellent sliding properties.

In the chrome plating method of the present invention, compressive residual stress and crystal grain size of the chrome layer can be easily controlled by adjusting the waveform of a pulse current. Therefore, a chrome plated part having desired properties can be efficiently obtained.

Further, in the method of the present invention for producing a chrome plated part, an oxide film containing Cr_2O_3 may be formed as an outermost layer of the chrome plated part. Therefore, formation of red rust due to corrosion of a metallic substrate and formation of white rust due to corrosion of the chrome layer can be surely prevented.

The present invention can be applied to a surface of a piston rod for a shock absorber or a surface of a piton ring for an engine.

The entire disclosures of Japanese Patent Application Nos. 10-332047 and 11-285503 filed on Nov. 6, 1998 and Oct. 6, 1999, respectively, each including a specification, claims, drawings and summary are incorporated herein by reference in their entirety.

What is claimed is:

[**1**. A chrome plated part comprising a substrate having a crack-free chrome layer on a surface thereof, the crack-free chrome layer having compressive residual stress of 100 MPa or more and being formed by electroplating.]

2. A chrome plated part [according to claim **1**]*comprising a substrate having a crack-free chrome layer on a surface thereof, the crack-free chrome layer having compressive residual stress of 100 MPa or more and being formed by electroplating with a pulse current*, wherein the chrome layer has a crystal grain size of 9 nm or more.

3. A chrome plated part according to claim **2**, wherein the crystal grain size of the chrome layer is *from 9 nm to* less than 16 nm.

4. A chrome plated part according to [claim **1**] *claim 2*, wherein the crack-free chrome layer is a lower chrome layer and the chrome plated part further comprises a cracked upper chrome layer which is formed on the lower chrome layer by electroplating.

5. A chrome plated part according to claim **4**, wherein the upper chrome layer has tensile residual stress.

6. A chrome plated part [according to claim **5**] *comprising a substrate having a crack-free chrome layer on a surface thereof, the crack-free chrome layer having compressive residual stress of 100 MPa or more and being formed by electroplating with a pulse current*, wherein*:*

the crack-free chrome layer is a lower chrome layer and the chrome plated part further comprises a cracked upper chrome layer which is formed on the lower chrome layer by electroplating with a pulse current;

the upper chrome layer has tensile residual stress; and

the upper chrome layer has a crystal grain and the crystal grain has a size less than 9 nm.

7. A chrome plated part [according to claim **4**.] *comprising a substrate having a crack-free chrome layer on a surface thereof, the crack-free chrome layer having compressive residual stress of 100 MPa or more and being formed by electroplating with a pulse current, wherein the crack-free chrome layer is a lower chrome layer and the chrome plated part further comprises a cracked upper chrome layer which is formed on the lower chrome layer by electroplating with a pulse current, the chrome plated part* further comprising at least one intermediate chrome layer which is formed between the lower chrome layer and the upper chrome layer by electroplating.

8. A chrome plated part [according to any one of claims **1**, **4** and **7**, further comprising] *comprising a substrate having a crack-free chrome layer on a surface thereof, the crack-free chrome layer having compressive residual stress of 100 MPa or more and being formed by electroplating with a pulse current and* an oxide film containing Cr_2O_3 as an outermost layer thereof.

[**9**. A chrome plated part comprising a substrate having a crack-free chrome layer on a surface thereof, the crack-free chrome layer having compressive residual stress of 150 MPa or more and being formed by electroplating.]

10. A chrome plated part [according to claim **9**] *comprising a substrate having a crack-free chrome layer on a surface thereof, the crack-free chrome layer having compressive residual stress of 150 MPa or more and being formed by electroplating with a pulse current*, wherein the crack-free chrome layer has a crystal grain size of 9 nm or more.

11. A chrome plated part according to claim **10**, wherein the crystal grain size of the crack-free chrome layer is *from 9 nm to* less than 16 nm.

[**12**. A chrome plated part comprising:

a substrate having a surface; and

a chrome layer deposited on the surface of the substrate by electroplating, the chrome layer having compressive residual stress of 100 MPa or more.]

13. A chrome plating method comprising the step of conducting electroplating of a work in a chrome plating bath by application of a pulse current, the chrome plating bath containing organic sulfonic acid, to thereby deposit a crack-free chrome layer on a surface of the work, the crack-free chrome layer having compressive residual stress of 150 MPa or more.

14. A chrome plating method comprising the step of conducting electroplating of a work in a chrome plating bath by application of a pulse current, the chrome plating bath containing organic sulfonic acid, to thereby deposit a crack-free chrome layer on a surface of the work, the crack-free chrome layer having compressive residual stress of 100 MPa or more.

15. A chrome plating method according to claim **14** or **13**, wherein the crack-free chrome layer is formed to have a crystal grain size of from 9 nm to less than 16 nm by adjusting a waveform of the pulse current.

16. A method for producing a chrome plated part, comprising the steps of:

conducting the chrome plating method of claim **14**;

polishing the crack-free chrome layer on the surface of the work; and

conducting heat oxidation, to thereby form an oxide film containing Cr_2O_3 on a surface of the crack-free chrome layer.

17. A method according to claim **16**, wherein the heat oxidation is conducted under the same conditions as conditions of a baking process.

18. A method according to claim **16**, wherein the heat oxidation is conducted by high-frequency heating.

19. A chrome plating method according to claim **14**, further comprising the step of conducting, after the pulse plating, electroplating of the work in the same chrome plating bath as the chrome plating bath for the pulse plating, by one of adjustment of a waveform of the pulse current and application of a direct current, to thereby deposit a cracked upper chrome layer on the crack-free chrome layer.

20. A chrome plating method according to claim **14**, further comprising the steps of:

conducting, after the pulse plating, electroplating of the work in the same chrome plating bath as the chrome plating bath for the pulse plating, by one of adjustment of a waveform of the pulse current and application of a direct current, to thereby deposit an intermediate chrome layer on the crack-free chrome layer; and

conducting electroplating of the work in the same chrome plating bath as the chrome plating bath for the pulse plating, by one of adjustment of the waveform of the pulse current and application of the direct current, to thereby deposit a cracked upper chrome layer on the intermediate chrome layer.

21. A chrome plating method according to claim **19** or **20**, wherein the chrome layers are deposited by continuous operation by continuously moving the work in the chrome plating bath.

22. A chrome plating method according to claim **19** or **20**, wherein the chrome layers are deposited by batchwise operation by immersing the work in the chrome plating bath.

23. A method for producing a chrome plated part, comprising the steps of:

conducting the chrome plating method of claim **19** or **20**;

polishing the upper chrome layer formed on the crack-free chrome layer on the surface of the work; and

conducting heat oxidation, to thereby form an oxide film containing Cr_2O_3 on a surface of the upper chrome layer.

24. A method according to claim **23**, wherein the heat oxidation is conducted under the same conditions as conditions of a baking process.

25. A method according to claim **23**, wherein the heat oxidation is conducted by high-frequency heating.

[26. A chrome plating method comprising the steps of:

providing a substrate having a surface; and

depositing a chrome layer on the surface of the substrate by electroplating so that the chrome layer has compressive residual stress of 100 MPa or more.**]**

27. The method according to claim 17, wherein said baking process is at 191±14° for 3 hours or more.

28. A method of chrome plating comprising the steps of:

providing a substrate having a surface;

depositing a crack-free chrome layer on the surface of the substrate by electroplating by application of a pulse current so that the crack-free chrome layer has compressive residual stress of 100 MPa or more, wherein said electroplating is in the presence of an organic sulfonic acid, and

forming an oxide film containing Cr_2O_3 on the surface of the crack-free chrome layer as an outermost layer.

29. A chrome plated part according to claim 7, further comprising an oxide film containing Cr_2O_3 as an outermost layer thereof.

30. A chrome plated part comprising a substrate having a crack-free chrome layer on a surface thereof, the crack-free chrome layer having a compressive residual stress of 100 MPa or more and being formed by electroplating with a pulse current, wherein:

the crack-free chrome layer is a lower chrome layer and the chrome plated part further comprises a cracked upper chrome layer which is formed on the lower chrome layer by electroplating with a pulse current; and

the chrome plated part further comprises an oxide film containing Cr_2O_3 as an outermost layer thereof.

* * * * *