May 5, 1925. 1,536,982

C. STRACHAN ET AL

FLUID ATOMIZER

Filed Dec. 23, 1922

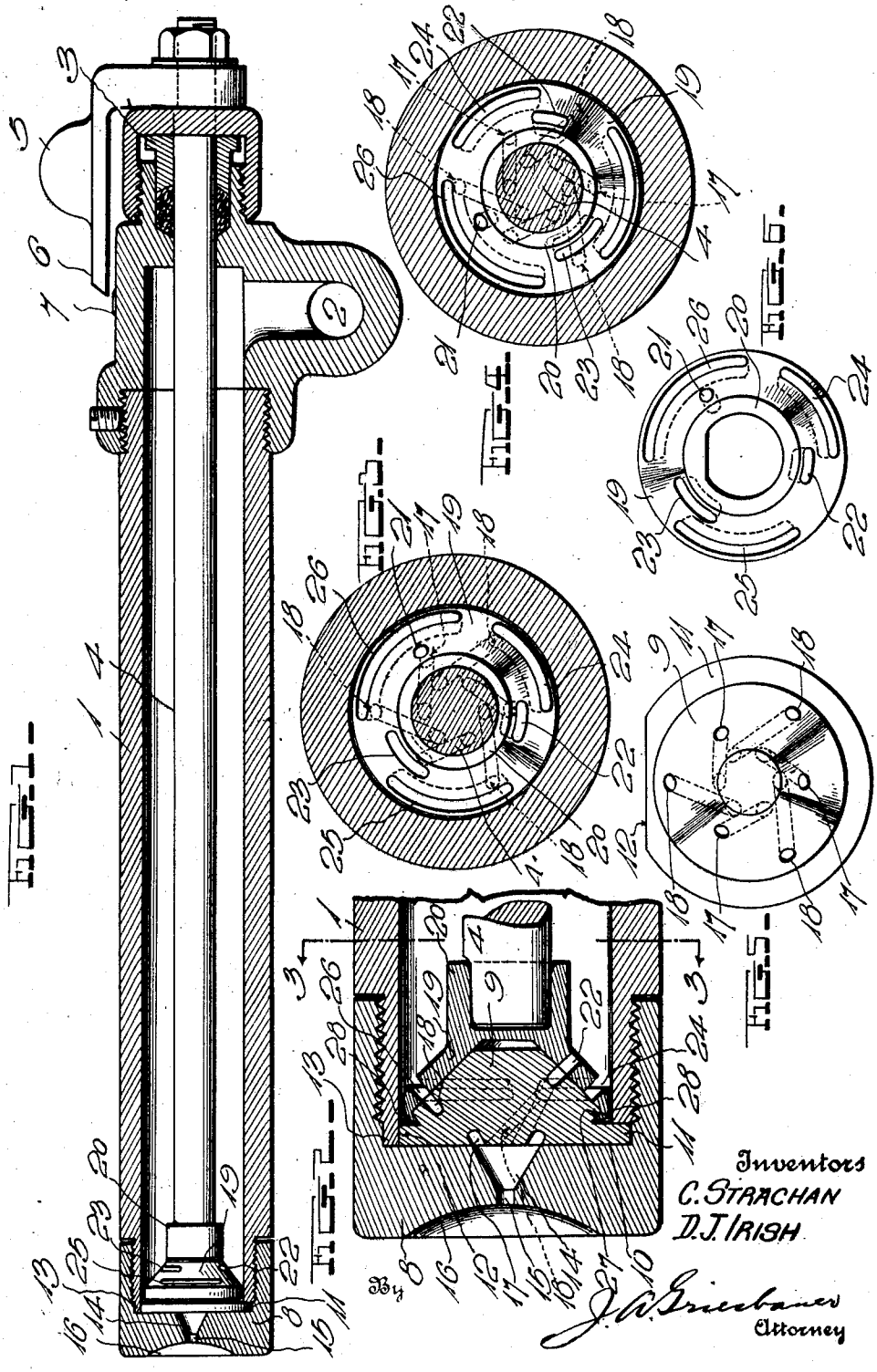

Inventors
C. STRACHAN
D. J. IRISH

By J. A. Griesbauer
Attorney

Patented May 5, 1925. 1,536,982

UNITED STATES PATENT OFFICE.

CHRISTOPHER STRACHAN, OF SOUTH ORANGE, NEW JERSEY, AND DAVID J. IRISH, OF ST. GEORGE, STATEN ISLAND, NEW YORK, ASSIGNORS TO MORSE DRY DOCK & REPAIR CO., OF NEW YORK, N. Y., A CORPORATION OF NEW YORK.

FLUID ATOMIZER.

Application filed December 23, 1922. Serial No. 608,704.

To all whom it may concern:

Be it known that we, CHRISTOPHER STRACHAN and DAVID J. IRISH, citizens of the United States, residing at South Orange and St. George, Staten Island, respectively, in the counties of Essex and Richmond and States of New Jersey and New York, respectively, have invented certain new and useful Improvements in Fluid Atomizers, of which the following is a specification, reference being had therein to the accompanying drawing.

Our invention relates to improvements in sprayers or atomizers and more particularly to oil burners used in boiler furnaces and the like in which the fuel oil is supplied to the burner under pressure to produce a hollow cone-shaped spray in the combustion chamber.

The principal object of the invention is to provide a simple, inexpensive and efficient mechanical atomizer in which the amount of oil sprayed may be regulated, without varying the oil pressure or temperature and without materially changing the shape of the cone spray and which will have a series of fixed capacities so that extreme care will not be required in adjusting the device to obtain the desired capacity.

In carrying out the present form of the invention, we make use of a preferably conical, tangentially ported member in the front end of a tubular body, a ported valve sleeve surrounding said ported member, and an operating stem inserted through the rear end of the body and connected with the valve sleeve for turning the same to control the discharge of fluid, a further object being to provide a swivel connection between said ported member and the valve sleeve, whereby they may be bodily removed as a single unit from the front end of the tubular body, whenever repairs or cleaning are necessary, this swivel connection also insuring constant engagement of the valve sleeve and ported member under varying conditions of expansion and contraction.

With the foregoing in view, the invention resides in the novel subject matter hereinafter described and claimed, the description being supplemented by the accompanying drawing.

Figure 1 is a longitudinal sectional view partly in elevation.

Figure 2 is an enlarged sectional view through the front end of the atomizer.

Figure 3 is a vertical transverse sectional view as indicated by line 3—3 of Fig. 2, showing all ports open.

Figure 4 is a view similar to Fig. 3 but illustrating the nearest point which the valve sleeve approaches to a completely closed position.

Figure 5 is a rear end elevation of the conical member which is removably held in the front end of the tubular body.

Figure 6 is a rear end elevation of the valve sleeve.

In the drawings above briefly described, illustrating one form of the invention, the numeral 1 designates a tubular body having a fluid inlet 2 at its rear end and also provided at this end with an appropriate stuffing box 3 through which an operating stem 4 is inserted, said stem having an operating handle 5 provided with a pointer 6 which co-operates with a number of indicators on the body, one of which is indicated at 7 in Fig. 1. The number of these indicators will of course correspond to the number of positions at which the valve mechanism at the front end of the burner, may be set.

A head is provided for the front end of the tubular body 1, said head being provided with a peripherally circular rear end extending into said body 1. This head is preferably formed of front and rear sections 8 and 9 respectively. The section 9 is shown in the form of a rearwardly tapered cone having a flat front face 10 and provided with a peripheral rib 11, this rib being disposed in contact with the front extremity of the body 1. To prevent the cone 9 from rotating, we prefer to flatten a peripheral portion of its rib 11, as indicated at 12, the front end of the body 1 being provided with a lip 13 contacting with said flattened rib portion, as shown clearly in Fig. 2.

In the present showing, the head section 8 is in the form of a cap threaded upon the front end of the tubular body 1 and provided with a flat rear side which contacts with the front surface 10 of the cone 9, whereby to secure this cone in place. The head 8—9 is provided between its ends with a mixing chamber, and in the present show-

ing, the aforesaid flat rear side of the cap 8 is provided with a conical recess 14 to form said chamber. This recess communicates with a discharge orifice 15 opening through the front side of the head, which side is preferably of concave form as indicated at 16. In the recess 14, the fluid is whirled by at least one and usually a plurality of preferably tangential ports with which the rear portion of the head is provided. These ports in the construction shown, have their rear ends opening through the periphery of the cone 9 while their front ends open through the front surface 10 of said cone in communication with the recess 14. We have shown an inner series of these ports, indicated by the reference numerals 17, and an outer series designated by the numerals 18, the ports of each series being circumferentially spaced as shown in Figs. 3, 4 and 5.

A valve sleeve 19 shown of frusto-conical form, surrounds and contacts with the peripheral portion of the cone 9, this sleeve having a slidable driving connection with the stem 4. Preferably, the sleeve 19 has a flat-sided socket 20 at its rear end which slidably receives the similarly shaped front end of the stem 4, so that rotation of this stem will turn the sleeve 19, yet said sleeve may be removed from the stem by moving it forwardly out of the tubular body 1, when the cap 8 is removed.

The sleeve 19 in the construction shown, is provided with an inner series of circumferentially spaced ports designated at 21, 22 and 23 respectively and is is also formed with an outer series of ports 24, 25 and 26. The inner ports 21, 22 and 23 co-operate with the inner tangential ports 17 of the cone 9 and said ports 21, 22 and 23 have their circumferential dimensions successively increased, the port 21 being the smaller of the series, while port 23 is the longer. The same is true of the ports 24, 25 and 26, port 24 being of greater length than the longest port 23 of the inner series, while port 25 is longer than port 24, and the port 26 is the longest of the series.

By the arrangement of ports above described, when the sleeve 19 is at the nearest point which it approaches to a completely closed position, port 26 is in communication with one of the outermost ports 18, so that some fluid will be discharged constantly from the atomizer. When the invention is used for a burner, a pilot light is thus insured at all times. By turning the handle 5 to the different indicators 7, the ports of the cone 9 may be successively opened until discharge of fluid is taking place through all of said ports or the device may be so set that fluid will be discharged only from any desired number of ports, as occasion may require. Whether one port of the cone 9 is in operation, or more ports are in play, the fluid discharged therefrom will be whirled around in the recess 14 and will discharge through the orifice 15 in the form of a spray which takes the shape of a hollow cone, with the advantages well known to the art.

Whenever it is necessary to disassemble the burner for cleaning, the cap 8 is unthreaded and the parts at the front end of the tubular body 1 may be easily removed. If desired, the stem 4 may then be withdrawn through the stuffing box 3, but this is usually unnecessary. The socket 20 will withdraw from the front end of the stem when the sleeve 19 is removed and in order that this sleeve may be bodily removed with the head 8—9 and may at all times remain in proper operative contact with the cone 9, without the necessity of using a spring device for forcing it forwardly, we swivel the sleeve 19 to the aforesaid head. We prefer to provide the cone 9 with a circumferential groove 27 into which the front end of the sleeve 19 is spun or otherwise turned, as indicated at 28. By thus swiveling the sleeve 19 upon the cone 9, they cannot become displaced with respect to each other when the burner is disassembled for cleaning purposes or repairing and furthermore, disassembling and assembling of the device is expedited by this arrangement, as well as permitting the elimination of spring devices to hold the sleeve 19 in proper operative contact with the cone 9. Also attention may be directed to the fact that by swiveling the sleeve 19 upon the cone 9, there is no possibility of said sleeve and cone separating from each other in case the tubular body 1 and the stem 4 should not uniformly expand and contract. Whenever such non-uniform expansion or contraction occurs, the sliding connection between the stem 4 and the sleeve 19, permits slight sliding of the sleeve with respect to the stem, and obviously the sleeve will move bodily with the cone.

In operation, it will be understood that the tubular body of the device projects through a suitable air register at the front of the furnace and that when the handle is turned to its limit of movement in one direction, but a single oil passage or port will be open to supply just enough oil to keep the burner in operation. When it is desired to increase the capacity, the handle is turned in the other direction one or more points until the proper flow of oil is reached to give the desired sized flame. When the limit of movement of the handle in that direction is reached, all six oil ports will be opened. It will therefore be seen that a plurality of fixed capacities for the burner are provided and no great skill or care on the part of the operator is necessary to obtain the desired capacity.

As excellent results may be obtained from

the details disclosed, they may be followed if desired. It is to be understood however that within the scope of the invention as claimed, modifications may be made.

We claim:

1. An atomizer comprising a tubular body having a fluid inlet, a head for the front end of said body provided with a rearwardly projecting peripherally circular rear end, said head having a chamber between its ends, an outlet orifice from the front end of said chamber and tangential ports leading to said chamber from circumferentially spaced points on the periphery of said rear end, a valve member within said tubular body having an annular portion surrounding said peripherally circular rear end of said head and contacting with the peripheral surface thereof, said annular portion of said valve member having ports from its outer to its inner side adapted for registration with said tangential ports, swivel-forming means connecting said annular portion of the valve member directly with the peripheral portion of said rear end of said head and holding said annular portion and head against relative axial movement, and a stem extending into the aforesaid tubular body and operatively connected with said valve member for rotating the latter.

2. An atomizer comprising a tubular body having a fluid inlet, a head for the front end of said body provided with a conical rear end, said head having a chamber between its ends, an outlet orifice from the front end of said chamber and tangential ports leading to said chamber from circumferentially spaced points on the periphery of said conical rear end, the latter being formed with a peripheral groove in front of said tangential ports, a valve sleeve surrounding said conical rear end of said head and contacting with the peripheral surface thereof, said valve sleeve having its front end turned into the aforesaid peripheral groove to swivel the sleeve upon the head, said sleeve being formed with ports from its outer to its inner side equal in number to and adapted for registration with said tangential ports, said ports of the sleeve successively increasing in their circumferential dimensions, and a stem extending into the aforesaid tubular body and operatively connected with the valve sleeve for rotating the latter.

3. An atomizer comprising a tubular body having a fluid inlet, a head for the front end of said body provided with a rearwardly projecting peripherally circular rear end, said head having a chamber between its ends, an outlet orifice from the front end of said chamber and at least one port leading to said chamber from the periphery of said rear end, a valve member having an annular portion surrounding said rear end of said head and contacting with the peripheral surface thereof, said annular portion of said valve member having at least one port from its outer to its inner side to register with the first named port, swivel-forming means connecting said annular portion of said valve member directly with the peripheral portion of said rear end of said head and holding the sleeve and head against relative axial movement, and a stem extending into the aforesaid tubular body and operatively connected with the valve sleeve for rotating the latter.

4. An atomizer comprising a tubular body having a fluid inlet, a head for the front end of said body provided with a rearwardly projecting peripherally circular rear end, said head having a chamber between its ends, an outlet orifice from the front end of said chamber and at least one port leading to said chamber from the periphery of said rear end, a valve member having an annular portion surrounding said rear end of said head and contacting with the peripheral surface thereof, said annular portion of said valve member having at least one port from its outer to its inner side to register with the first named port, swivel-forming means extraneous to the aforesaid chamber and connecting said valve member with said head to prevent relative axial movement of said valve member and head, and a stem extending into the aforesaid tubular body and operatively connected with the valve sleeve for rotating the latter.

In testimony whereof we hereunto affix our signatures.

CHRISTOPHER STRACHAN.
DAVID J. IRISH.