(No Model.)

T. H. SMITH.

CAR COUPLING.

No. 590,488. Patented Sept. 21, 1897.

Fig. 1

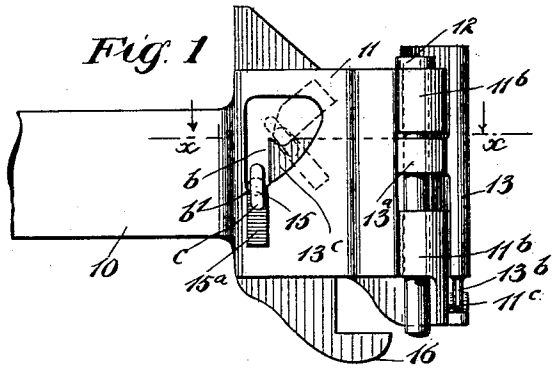

Fig. 2

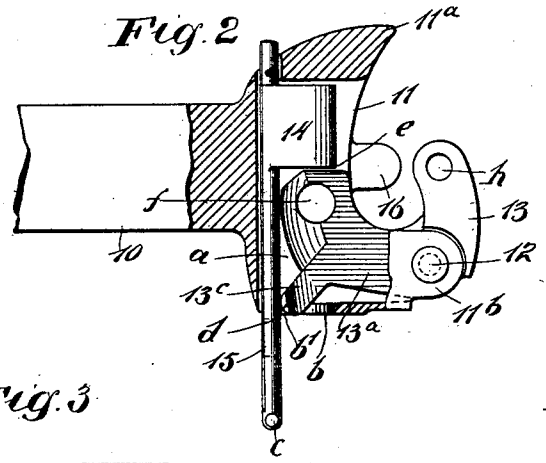

Fig. 3

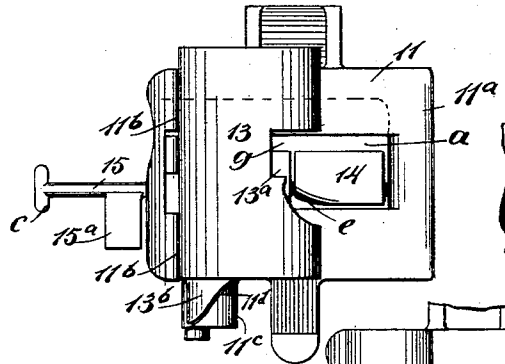

Fig. 4

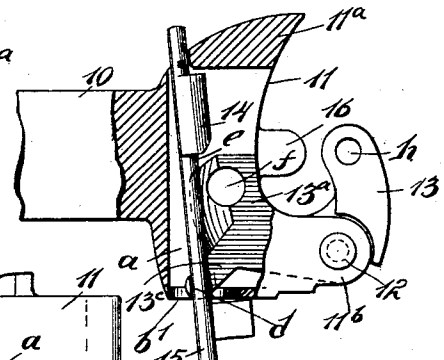

Fig. 5

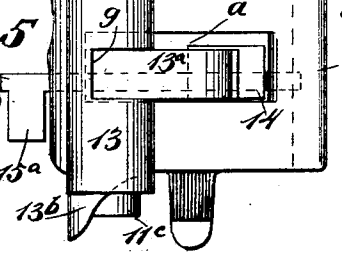

WITNESSES:

John A. Brophy

Wm. P. Patton

INVENTOR

T. H. Smith.

BY Munn & Co

ATTORNEYS.

THE NORRIS PETERS CO., PHOTO-LITHO., WASHINGTON, D. C.

UNITED STATES PATENT OFFICE.

THOMAS HENRY SMITH, OF BOWIE, TEXAS.

CAR-COUPLING.

SPECIFICATION forming part of Letters Patent No. 590,488, dated September 21, 1897.

Application filed April 30, 1897. Serial No. 634,516. (No model.)

To all whom it may concern:

Be it known that I, THOMAS HENRY SMITH, of Bowie, in the county of Montague and State of Texas, have invented a new and Improved Car-Coupling, of which the following is a full, clear, and exact description.

This invention relates to car-couplings of the Janney type, and has for its object to provide a car-coupling of the indicated character with novel features of construction that afford increased efficiency in service and enable an operator at the side of the train to readily and with safety set the improved car-coupling to disconnect it from another of the same style.

The invention consists in the novel construction and combination of parts, as is hereinafter described, and defined in the appended claims.

Reference is to be had to the accompanying drawings, forming a part of this specification, in which similar characters of reference indicate corresponding parts in all the figures.

Figure 1 is a side view of the improved car-coupling. Fig. 2 is a partly-sectional plan view substantially on the line $x\ x$ in Fig. 1, showing working parts in coupled condition. Fig. 3 is a front end elevation of the coupling. Fig. 4 is a partly-sectional plan view on the line $x\ x$ in Fig. 1, showing the parts adjusted to release them from another coupling; and Fig. 5 is a front end elevation showing the knuckle-block in open adjustment.

The draw-bar 10 of the improved coupling, which is partially shown in the drawings, in complete form is of a suitable length for proper service and is secured by any preferred means upon the end portion of a car-frame so as to adapt the coupling for efficient operation.

On the forward end of the draw-bar 10 an integral draw-head 11 is formed, which is recessed from the front to adapt it for the reception of working parts that will presently be described.

At one side of the draw-head 11 an integral horn 11^a is laterally and forwardly projected, and at the opposite side of the draw-head two spaced ears 11^b are produced thereon, which ears are vertically perforated to receive a pintle-bolt 12. Below the lower ear 11^b and integral with it a depending lug 11^c is formed upon the draw-head and forwardly projects from the side of the said ear 11^b and has an upwardly-trending incline 11^d formed thereon concentrically with the vertical perforations of the ears 11^b.

A knuckle-block is provided comprising a coupling-limb 13, somewhat thicker than the body of the draw-head, and from the center of said coupling-limb (vertically considered) rearwardly projects the tailpiece 13^a. The coupling-limb 13 is furnished with a depending formation 13^b, sloped on its lower face to adapt it to conform with the inclined surface on the depending lug 11^c.

At the junction of the coupling-limb 13 with the tailpiece 13^a a vertical perforation is formed to receive the pintle-bolt 12, and said tailpiece is of such reduced thickness as compared with the vertical dimension of the recess a, wherein it is located, that the tailpiece may, when rocked upon the pintle-bolt 12, rise and fall in the recess a limited degree, said tailpiece sliding on said bolt.

The relative construction and positions of the inclines on the lug 11^c and depending formation 13^b adapts the knuckle-block to swing into open adjustment by its gravity, as the weight of said block will cause the incline on said formation 13^b to downwardly traverse the incline on the lug 11^c, which will terminate when the tailpiece contacts with the lower surface of the recess a, as shown in Fig. 5, and when the limb 13 is in open adjustment. The tailpiece 13^a is curved at the rear end to extend it in the same direction as the coupling-limb 13 projects, the intervening portion of the body of the tailpiece serving to locate the rear end of the same transversely within the recess a, when the complete knuckle-block is adjusted, as shown in Figs. 2 and 4.

In the recess a a gravity-block 14 is supported to rock from a horizontal plane by the tripping-shaft 15, whereon said block is secured at its normally rear end, the body of the gravity-block extending toward the front of the open recess wherein it is located. The tripping-shaft 15 projects loosely through the side of the draw-head 11, whereon the horn 11^a is formed, and at the opposite side of said draw-head, where a suitably-enlarged aperture b is produced therein, the tripping-shaft

is outwardly extended through said aperture and has a handle-piece *c* formed on the outer extremity of said extension.

The gravity-block 14 is of such a proportionate width as will permit it to work loosely between the side wall of the recess *a* and the end of the tailpiece 13^a when the latter is in closed adjustment, as shown in Figs. 2 and 3.

From the side of the tailpiece 13^a, adjacent to the aperture *b* in the side of the draw-head, an arm 13^c is projected, which will enter said aperture when the knuckle-block is in closed condition, as shown in Figs. 3 and 4. On the portion of the tripping-shaft 15 that extends through the aperture *b* a supplementary weight-block 15^a is affixed and is disposed at a right angle to the plane of the gravity-block 14, so that when the latter is elevated the weight-block will be rocked forwardly into a horizontal position and thus coact with the gravity-block to depress the latter when the relative adjustment of the knuckle-block will permit the gravity-block to fall.

A concavity is formed in the upper edge of the arm 13^c near its free end, as is indicated at *d* in Figs. 2 and 4, said concavity being designed to receive the body of the shaft 15, as will be further explained.

The rear edge of the tailpiece 13^a, between the arm 13^c and free end of said tailpiece, is sloped from the upper to the lower side, and the lower edge is convexly curved. The lower front corner *e* of the gravity-block 14, which is nearest to the tailpiece 13^a, is cut away and rounded sufficiently to permit the sloped rear edge of said tailpiece to glide below the rounded corner when the knuckle-block is swung to close the coupling-limb 13, which operation will elevate the gravity-block sufficiently to permit the tailpiece to pass said block and assume the position shown in Fig. 2.

When the coupling-limb 13 is transversely disposed and the tailpiece of the knuckle-block is located within the recess *a* of the draw-head, space is afforded for the free movement of the gravity-block 14, which will fall forwardly and thus afford a barrier to prevent the knuckle-block from rocking. The opening *b* in the side wall of the draw-head 11 is essentially triangular, and one rounded corner *b'* of said opening is located near the bottom of the recess *a*. The transverse tripping-shaft 15 when horizontal lies in the lower corner *b'* of the opening *b*, and when so disposed the tripping-shaft and gravity-block 14 may be freely rocked.

On the lower side of the draw-head 11 a hook 16 is formed or secured, which projects forwardly between the horn 11^a and ears 11^b, this projecting hook being designed to have contact with the lower side of a coupling-limb 13 on another car-coupling that is coupled to the one herein described and will provide a support for the connected couplings in case one of them is accidentally detached from its fastenings on the car.

In service it will be evident that on release of the knuckle-block 14 by manipulation of the cross-handle *c* on the tripping-shaft 15 the coupling limb or jaw 13 will by its gravity swing outward and thus be automatically adjusted to be recoupled to a mating coupling when the two similar car-couplings are forced together. It has in practice been found difficult to release cars of a train having side-latching couplings that have their knuckles held locked by slidable keys, and particularly is this the case when draft strain is not relaxed.

One feature of the improvement is designed to correct this difficulty and enable the ready detachment of any two cars of a train without requiring their coupled connections to be slackened. To effect this, it is only necessary to push the shaft 15 endwise by pressure on the handle-piece thereon. This will slightly move the gravity-block 14 away from the adjacent end of the tailpiece 13^a and permit the operator to freely rock the gravity-block 14 upwardly, and it will be temporarily retained in this position if the shaft 15 is located in the concavity *d* of the arm 13^c, previously mentioned. This retention of the gravity-block is due to the engagement of the gravity-block with the interior wall of the draw-head. As the shaft 15 is swung to the position shown in Fig. 4 the block 14 will be moved to a diagonal disposition with reference to the left-hand side wall of the cavity in the draw-head, and consequently the block will engage said side wall and be thereby held in elevated position. The trainman now shifts the tripping-shaft 15 from its position in the lower corner *b'* of the aperture *b* and by a lifting forward movement locates the body of said shaft in the depression made at *d* in the arm 13^c, which will temporarily support the shaft in its inclined position.

The operator at the time of changing the position of the shaft 15, as just described, simultaneously rocks the gravity-block 14 into an elevated position, which will evidently release the knuckle-block so that it may swing open when draft strain is applied to the coupling-limb 13. The application of force sufficient to rock the tailpiece 13^a outwardly and away from the gravity-block 14 so changes the position of the arm 13^c that the shaft 15 will be dislodged therefrom and by its weight will be carried back into the lower corner *b'* of the aperture *b*.

The tailpiece 13^a is vertically perforated, as at *f*, to enable a coupled connection to be effected between this part of the car-coupling and a knuckle on a coupling of the Miller style, such a connection being made in case of necessity; and it will be apparent that to effect such a coupled engagement the knuckle-block of the improved car-coupling must be in opened adjustment. There is a horizontal slot *g* formed near the center of thickness in the coupling-limb 13, thereby providing two spaced ears on the free end of said limb, and alined vertical perforations *h* are formed in

said ears to receive an ordinary coupling-pin. This provision affords other means for coupling the improved car-coupling with a link-and-pin car-coupling, the link in such a connection of parts being introduced within the slot *g* and secured therein by a coupling-pin that is inserted in the perforations *h*. It is claimed for this improved car-coupling that it is very simple, consisting substantially of but three main parts, which may be cast into form and be used as shaped in the mold, the facility of manufacture rendering the improvement inexpensive and consequently adapting it for general use.

Having thus described my invention, I claim as new and desire to secure by Letters Patent—

1. The combination with a draw-head recessed from the front, and having spaced ears thereon at one side, of a pivoted knuckle-block having a tailpiece adapted to swing into the recess, a depending lug on the lower ear, having an incline thereon located forward of the knuckle-pivot, the knuckle-block having a depending inclined formation on the lower side of the coupling-limb thereon, which inclined formation is adapted to traverse the incline on the draw-head and cause the knuckle-block to swing open by its gravity, substantially as described.

2. The combination with a draw-head recessed from the front, spaced ears on one side of the said draw-head, and a knuckle-block having a tailpiece between the ears and extending laterally in the recess, said tailpiece having an arm extended toward an aperture in the side of the draw-head behind the ears thereon, of a tripping-shaft rockable transversely in the draw-head recess and projecting through the aperture in its side wall, a gravity-block projecting forwardly from the tripping-arm and secured thereon, the gravity-block being adapted to lock the knuckle-block when the latter is closed, and to release said knuckle-block when the tripping-shaft is lifted and imposed on the arm of the tailpiece, substantially as described.

3. In a device of the character described, a knuckle-block having a tailpiece extended in the same direction as the coupling-limb of said knuckle-block, and provided with a limb extended toward an aperture in the side wall of the draw-head, and a gravity-block rockable with the transverse tripping-shaft that extends through said aperture, the limb on the tailpiece being concaved on the top edge to receive the tripping-shaft when said shaft is raised and moved forwardly, substantially as described.

THOMAS HENRY SMITH.

Witnesses:
BENJAMIN ULSH,
J. L. RUDY.