No. 636,718. Patented Nov. 7, 1899.

J. M. CHRISTIE &. R. ROCK.

CYLINDER VALVE FOR FLUID PRESSURE ENGINES.

(Application filed Feb. 18, 1899.)

(No Model.) 3 Sheets—Sheet 1.

Fig. 1.

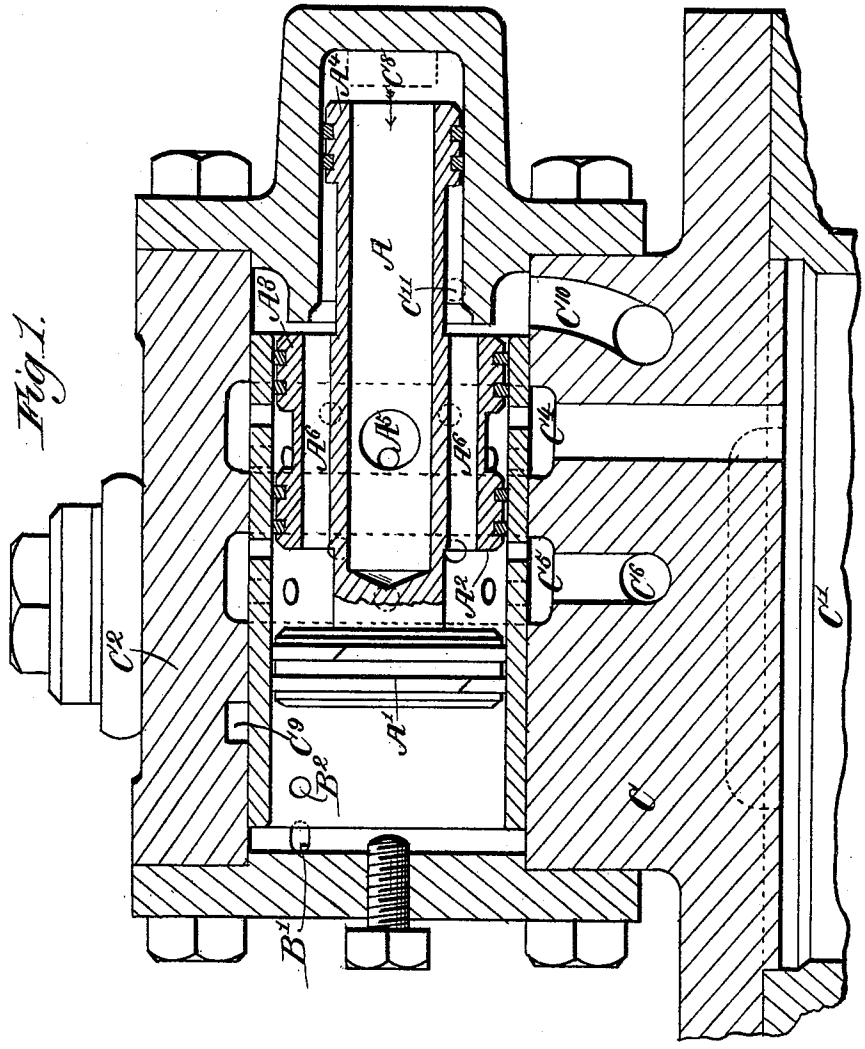

Witnesses.
Robert Everett
[illegible]

Inventors.
James M. Christie.
Richard Rock.
By James L. Norris
Atty.

THE NORRIS PETERS CO., PHOTO-LITHO., WASHINGTON, D. C.

No. 636,718. Patented Nov. 7, 1899.

J. M. CHRISTIE &. R. ROCK.

CYLINDER VALVE FOR FLUID PRESSURE ENGINES.

(Application filed Feb. 18, 1899.)

(No Model.)

3 Sheets—Sheet 2.

Fig. 2.

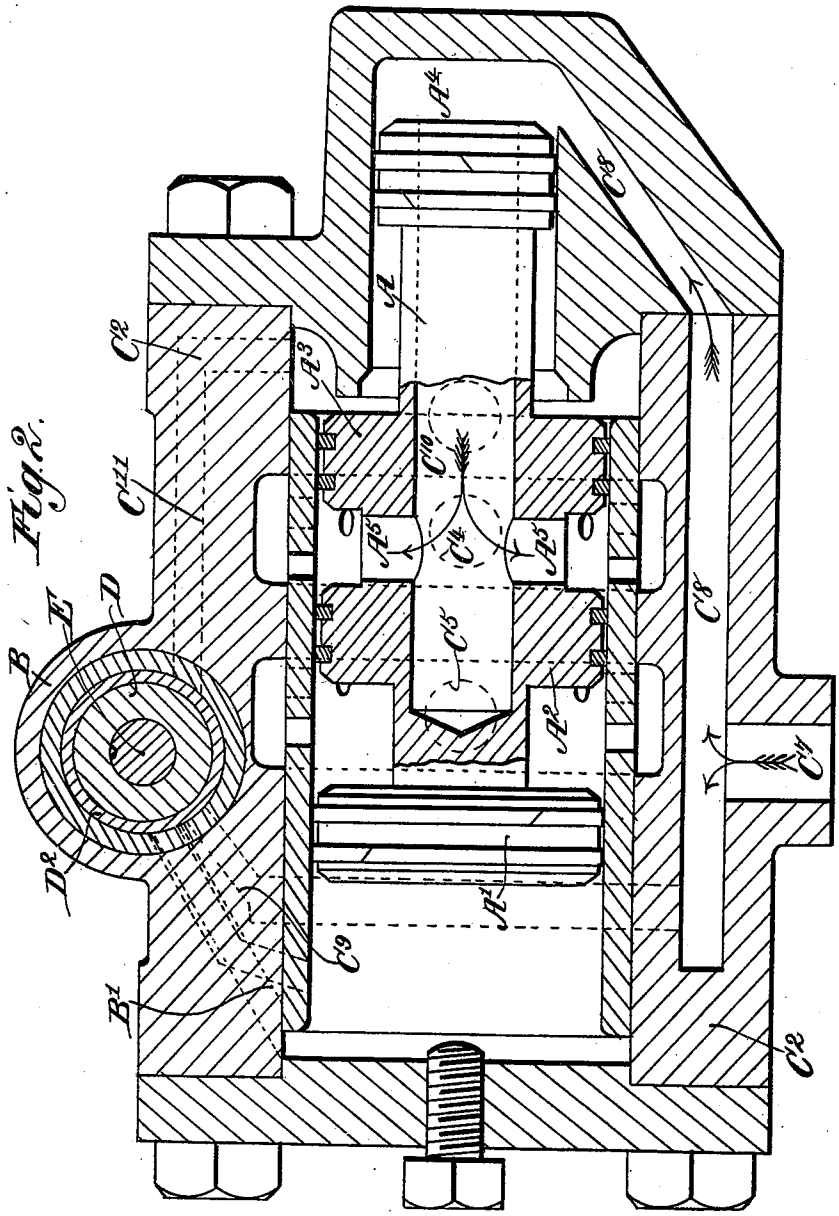

Witnesses.
Robert Everett.
J. B. Keely

Inventors.
James M. Christie.
Richard Rock.
By James L. Norris.
Atty.

THE NORRIS PETERS CO., PHOTO-LITHO., WASHINGTON, D. C.

No. 636,718. Patented Nov. 7, 1899.

J. M. CHRISTIE &. R. ROCK.

CYLINDER VALVE FOR FLUID PRESSURE ENGINES.

(Application filed Feb. 18, 1899.)

(No Model.) 3 Sheets—Sheet 3.

Fig. 3.

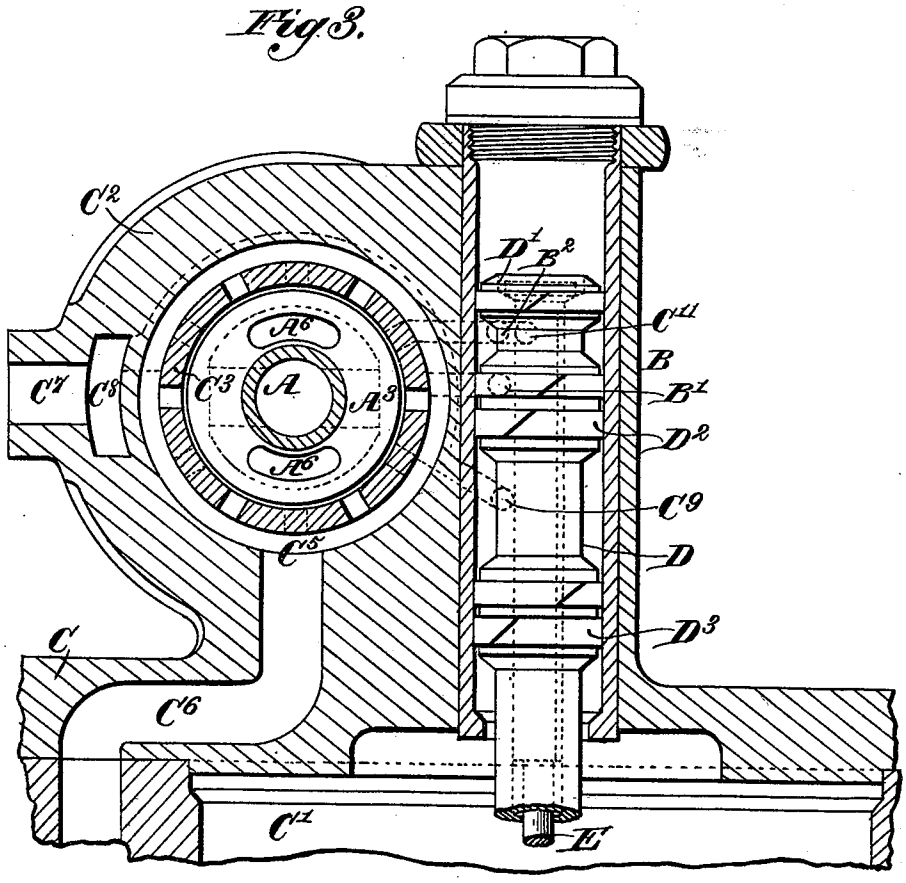

Witnesses.
Robert Everett.
F. B. Keefer

Inventors.
James M. Christie.
Richard Rock.
By James L. Norris.
Att'y.

THE NORRIS PETERS CO., PHOTO-LITHO., WASHINGTON, D. C.

UNITED STATES PATENT OFFICE.

JAMES M. CHRISTIE, OF GLEBE POINT, AND RICHARD ROCK, OF BURWOOD, NEW SOUTH WALES.

CYLINDER-VALVE FOR FLUID-PRESSURE ENGINES.

SPECIFICATION forming part of Letters Patent No. 636,718, dated November 7, 1899.

Application filed February 18, 1899. Serial No. 706,048. (No model.)

To all whom it may concern:

Be it known that we, JAMES MACARA CHRISTIE, residing at No. 57 Wigram street, Glebe Point, near Sydney, and RICHARD ROCK, residing at Stanley street, Burwood, near Sydney, in the Colony of New South Wales, British subjects, have invented certain new and useful Improvements in Cylinder-Valves for Fluid-Pressure Engines, (for which we have applied for a patent in Great Britain, No. 21,757, dated October 15, 1898,) of which the following is a specification.

This invention relates to improvements in cylinder-valves for direct-acting fluid-pressure engines and pumps or those valves which control the supply and exhaust of working fluid for the cylinders of engines which impart a reciprocating and not a circular motion to the object actuated, such as the piston of a pump.

The present invention involves the features of construction, the combination or arrangement of parts, and the principles of operation hereinafter described, and set forth in the claims, reference being made to the accompanying drawings, in which—

Figure 1 is a vertical section of the main valve and its cylindrical casing. Fig. 2 is a sectional plan of the main and secondary valves and their casings. Fig. 3 is a vertical section of both valves on a plane at right angles to that of the section Fig. 1.

C is the cover of the engine-cylinder C′, which is assumed to be vertical. On this cover, in one piece with it, is formed the cylindrical casing C^2 of the main valve, the axis of this casing being horizontal and the casing being bushed with a lining C^3, through which there are holes or ports which put the interior in communication with two annular ports C^4 and C^5. Of these C^4 communicates directly with the upper end of the main cylinder C′, and C^5 communicates with a pipe or channel C^6, leading to the lower end of the main cylinder. There is an inlet C^7 for the steam or working fluid leading by a channel C^8 to the right end of the main-valve casing and by a channel C^9 to the secondary-valve casing. From the main-valve casing there is an outlet C^{10} for exhaust, this communicating by a channel C^{11} with the secondary-valve casing.

The main valve consists of a tubular stem A, on which are three pistons A′ A^2 A^3 and a smaller piston A^4, working in a smaller cylindrical part formed in the cover of the valve-casing. The interior of the tubular stem has two lateral openings A^5 into the space between the pistons A^2 and A^3, and through these and a widened part of the stem are channels A^6 for passage of exhaust. The casing B of the secondary valve is also cylindrical, having its axis vertical. From it, besides the channels C^9 and C^{11} already referred to, there are two other channels, one, B′, leading to the extreme left end of the main-valve casing, behind the piston A′, and the other, B^2, opening into the main-valve casing a little farther from its left end. The stem D of the secondary valve is tubular and has on it three pistons D′ D^2 D^3, the middle one, D^2, of which governs the ports B′ and B^2, and between the pistons D′ and D^2 there is the exhaust-port C^{11}. Through the tubular stem passes a rod E, which extends into the tubular rod of the main piston and has on it collars at each end, the one bearing on the top of the secondary valve and the other meeting an internal shoulder of the main piston-rod as it is approaching the end of its down-stroke, so that the secondary valve is then drawn down to the position shown in Fig. 3, being afterward pushed up by the main piston as it approaches the end of its upstroke, acting on a prolongation of the valve-stem D. The rod E has a groove along its side, so that there is free passage to the upper part of the slide-case B, and therefore the pressure on both pistons D′ and D^3 is always the same.

The operation of the valve is as follows: When the main piston has ascended, bringing the secondary valve up, fluid under pressure passes by the port B′ to the left end of the main-valve case C^2 and acts on the piston A′, propelling the main valve to the right. Fluid thereupon passes by the port C^4 to the top end of the main cylinder, while exhaust from the lower end of the cylinder passes by the port C^5 to the space between the pistons A′

and A^2, and thence through the channels A^6 to the exhaust-channel C^{10}. The main piston is thus propelled downward. As it approaches the end of its downstroke it draws down the secondary valve. The port B′ is thus closed, and the port B^2 is put in communication with the port C^{11}, leading to the exhaust, and then the pressure on the piston A^4 causes the main valve to make its stroke to the left, being cushioned by the fluid imprisoned behind the piston A′ when it passes the port B^2. By this movement of the main valve fluid is admitted by the port C^5 to the lower end of the main cylinder, while the upper end is put in communication through the channel C^4 with exhaust C^{10}. Thereupon the main piston makes its upstroke, after which the operation is repeated.

We claim—

1. The combination with the cylinder of a direct-acting fluid-pressure engine, of a main slide-valve having two separated, centrally-arranged pistons governing two ports in the main-slide-valve casing which lead to the two ends of the cylinder and provided at its opposite ends with pistons of different diameter, said main-slide-valve casing having an inlet for the live working fluid which actuates the cylinder-piston and a port leading from said inlet to the outer face side of the smallest valve-piston to subject its outer face to the pressure of the live working fluid in transit to the cylinder to actuate the cylinder-piston, a secondary-slide-valve casing having an inlet, an exhaust-port and two channels opening at different points into one end of the main-slide-valve casing, and a secondary slide-valve arranged at right angles to the plane of the main valve, provided with three pistons and worked by the cylinder-piston, the intermediate piston of said secondary slide-valve controlling the said two channels which open at different points into one end of the main-slide-valve casing, substantially as described.

2. The combination with the cylinder of a direct-acting fluid-pressure engine, of a hollow main slide-valve having a lateral fluid-opening, two separated, centrally-arranged pistons which govern two ports designed to lead, respectively, to the two ends of the cylinder and two end pistons differing in diameter, the outer face of the smallest end piston being constantly subjected to the pressure of the live working fluid in transit to and through said hollow main valve to actuate the cylinder-piston, and a secondary slide-valve arranged at right angles to the plane of the main valve, provided with three pistons and worked by the cylinder-piston, substantially as described.

3. The combination with the cylinder of a direct-acting fluid-pressure engine, of a main slide-valve composed of a tubular stem having two separated, centrally-arranged pistons and lateral openings between the latter and provided at its ends, respectively with two pistons of different diameter, said centrally-arranged pistons governing ports designed to lead to the ends of the cylinder and the smallest end piston constantly subject to the working-fluid pressure, and a secondary slide-valve worked by the cylinder-piston and provided with three pistons for controlling the exhaust and the fluid-pressure on the largest end piston of the main slide-valve, substantially as described.

In testimony whereof we have hereunto set our hands in presence of two subscribing witnesses.

JAMES M. CHRISTIE.
RICHARD ROCK.

Witnesses:
D. W. RIXLUYT,
FRED WALSH.