(12) **PATENT**

(11) **348181** (13) **B1**

(19) NO

NORWAY (51) Int Cl.

***A01K 61/95 (2017.01)***
***A01K 61/10 (2017.01)***
***A01K 61/13 (2017.01)***
***A01K 61/60 (2017.01)***
***A01K 63/02 (2006.01)***

**Norwegian Industrial Property Office**

| | | | | |
|---|---|---|---|---|
| (21) | Application nr. | 20230805 | (86) | International Filing Date and Application Number |
| (22) | Date of Filing | 2023.07.21 | (85) | Date of Entry into National Phase |
| (24) | Date of Effect | 2023.07.21 | (30) | Priority |
| (41) | Publicly Available | 2024.09.23 | | |
| (45) | Granted | 2024.09.23 | | |

| | | |
|---|---|---|
| (73) | Proprietor | Sea Soul AS, Feråslia 17, 5253 SANDSLI, Norge |
| (72) | Inventor | Helge Adam Egge, Feråslia 17, 5253 SANDSLI, Norge |
| (74) | Agent or Attorney | BRYN AARFLOT AS, Stortingsgata 8, 0161 OSLO, Norge |

(54) Title **Apparatus and method for moving live fish**

(56) References Cited: WO 2015110441 A1, JP 2000245294 A, JP 2008154483 A, EP 0311879 A1, WO 2013108251 A2, WO 2018094541 A1, NO 334417 B1

(57) Abstract

An apparatus and a method for moving live fish from a fish tank (1) to outside of the fish tank (1). The tank has water-impenetrable bottom and sidewalls and is floatable in a body of water. It has a water outlet (6a) from the tank (1) and a water inlet (12a) to the tank (1). The inlet is coupled to a fish removal tube (12), which at an opposite end is coupled to a fish receptacle (14) above the surface (13) of the body of water. The tube (12) has a fresh water inlet (9a) supplying water through the tube (12) and into the tank (1), thereby creating a flow against which fish is invited to swim. The tank has lifting means lifting the tank (1) upwards in the body of water while letting water inside the tank (1) flow out of the tank (1).

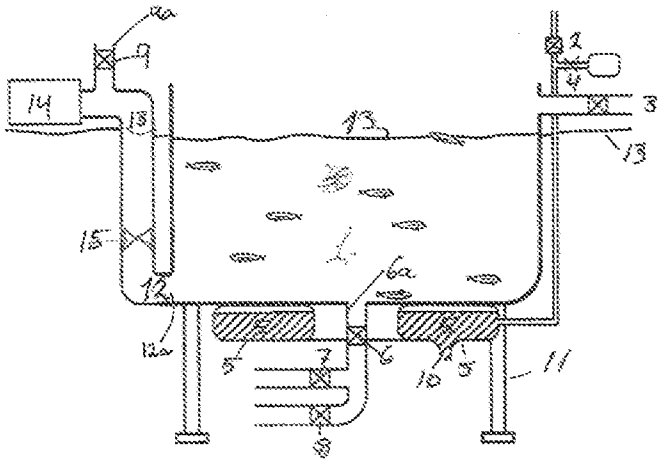

# AN APPARATUS AND A METHOD FOR MOVING LIVE FISH

## Technical Field

[0001] Present invention relates to an apparatus and method for moving live fish according to the preamble of the independent claims. More specifically, the invention related to a method of retrieving fish from a body of water and a device for performing this operation.

## Background Art

[0002] In coastal industrial fish farming fish is often held in pens. The most frequently used pens comprise a ring-shaped float to which a net is attached, which defines an enclosure for the fish. The fish is kept at a relatively high population density in the pen, and it is necessary to perform treatment of the fish at regular intervals or according to need to avoid parasites, such as salmon louse, and other diseases. The treatment can be performed by taking fish out of the pen for injections, or by covering the pen with an outer bag-shaped impregnable tarpaulin or the like and mix treatment chemicals into the water at the inside of the tarpaulin.

[0003] In both these instances the volume inside the pen must be reduced to further increase the population density of the fish. This is done by partly lifting the net of the pen. Lifting of the pen requires lifting equipment, such as cranes, which is expensive and subject the net to physical tensions that may damage the net or other parts of the net. The reduction of the volume may also cause stress to the fish inside the pen, and in some instances also physical injury due to the increased population density.

[0004] In normal circumstances special pumps are used to take the fish out of the pen. The pumps may also injure the fish and subject the fish to stress, which may lead to increased mortality. When the fish is brough out of the pen for slaughtering, physical injuries and stress may influence on the quality of the fish and thus the price of the fish.

[0005] For in situ treatment of fish, such as against salmon louse, by using an impregnable tarpaulin or the like on the outside of the pen, the time is a crucial factor. The chemicals that are used are poisonous to the fish at long exposures, and a tarpaulin will reduce, or even completely prevent, supply of fresh oxygen rich water

into the pen. The treatment time will thus be a compromise between achieving a sufficient treatment time and minimizing the risk of poisoning and/or drowning, i.e., death due to lack of oxygen.

[0006] Methods and means to allow fish to migrate between water and waterways that are separate from each other, or where waterfalls prevent fish from swimming upwards in a river, are already known.

[0007] Salmon ladders is a well-know way of providing a path for fish, such as salmon or trout, to pass a waterfall which is too high or has a too powerful waterflow for the fish to traverse. A salmon ladder will normally comprise several small ponds that are interconnected by smaller waterfalls, which the fish is capable of traversing.

[0008] SE527974 relates to a variant of a salmon ladder where a tube-shaped body connects two separate water basins at different heights. The tube has a varying diameter along its length to obtain a varying velocity of flow for the water in different parts of the tube.

[0009] GB2299920 relates to a floating fish passage, which connects two water basins at different heights, where the fish passage is a channel with a rectangular cross section through which the fish may swim against the flow of water.

[0010] FR2666960 and US20100086357 both relate to passages for eel, comprising a channel set at an inclination. The channel has a bottom part that is covered with a brush substate that imitates grass. The brush substate is kept moist by irrigation so that it imitates wet grass, which is the nature of the ground that the eel uses to migrate between water basins. According to FR2666960 a collection sump to collect eel falling above the upper edge of the inclined channel is arranged to gather the eel and lead these into a tube-shaped body for transport of the eel together with water to a location where the eel will be set free. It is mentioned that the eel can be retrieved for weighing etc.

[0011] WO2015110441 belongs to the same applicant and describes a salmon ladder where a flow of water down an inclined duct is established. The salmon is encouraged to swim up the duct.

[0012] NO344177 describes an assembly of multiple pens, where each pen can be lifted relative to the surrounding water. The lifting is done by buoyancy, where water-

filled tanks that can be evacuated. The fish in the pen is evacuated by what is termed "natural crowding" and pumping through the bottom. With this system the fish is led passively out of the pen. The emptying of the pen both of fish and water will therefore take considerable time, and there is a risk that some fish will remain in the pen when the water level becomes too low for it to swim.

[0013] JP 2000245294, JP 2008154483, EP 0311879, WO 2013108251, WO 2018094541 and NO 334417 describe other known systems for handling fish.

[0014] A purpose of the present invention is to provide a method and a device for effectively taking up fish and transfer the fish to another pen or to a transport receptacle, for treatment and/or check, or for slaughtering, and which avoid the drawbacks of the prior art.

**Summary of invention**

[0015] The objective of the present invention to provide an apparatus and a method that allows gentle removal of the fish from a keep, such as a pen or tank. In particular, the apparatus and method invite the fish to swim out of the keep by its own determination. Such an apparatus and method are obtained by the features of the appended independent claims.

[0016] It is also an objective of the present invention to avoid having to remove the fish from the keep before transportation. This is achieved by a floating tank that can be towed or pushed by a vessel while afloat, or a tank that can be lifted on board the vessel.

[0017] Preferred embodiments of the invention are achieved by the dependent claims.

**Brief description of drawings**

[0018] Figure 1 depicts an embodiment of the invention where the apparatus is partly submerged in a body of water,
figure 2 depicts the apparatus in Fig. 1 in a raised position,
figure 3 depicts the apparatus in Figs. 1 and 2 on a floating vessel, and

figure 4 shows a piping arrangement by which a substantial part of the water in the pen can be changed without the use of water pumps.

**Detailed description of the invention**

[0019] Figure 1 depicts the apparatus according to the invention during a normal use, floating on a body of water. The apparatus can be raised and lowered in the body of water by different means, such as ballast tanks (5) with variable buoyancy, pumping of water out of the tank and a crane, which will be explained in detail below. The apparatus comprises a fish tank (1) with water impenetrable bottom and sidewalls, and an open top. The fish tank (1) can have a square, rectangular, circular, or polygonal cross section. The apparatus may have one or more ballast tanks (5) placed for example externally on the bottom of the fish tank (1) and/or on the exterior outer walls of the fish tank (1). The ballast tanks (5) are connected to a system for controlling the buoyancy of the apparatus, and thereby the position of the apparatus in relation to the water level outside the fish tank (1) This system for controlling the buoyancy comprises an inlet (2) for supply of pressurized air to the ballast tanks (5), an outlet (4) for discharge of air from the ballast tanks (5) and an outlet/inlet for water (10). This ballast water inlet/outlet (10) can be open or comprise a control valve. Further, the apparatus comprises a tank water outlet (6a) with a bottom valve (6) for discharge of water from the fish tank (1). The outlet may be connected to a valve (7), which in turn is coupled to a pump (not shown) for suction of water from the fish tank. Alternatively, or in addition, the outlet may be coupled to a valve (8) controlling the amount of water in the fish tank (1) when water runs passively into or out of the tank (1) as the apparatus is lowered or raised in the body of water. Further, the fish tank (1) may comprise a water inlet (3) for supply of fresh water into the fish tank (1).

[0020] Further, the apparatus comprises a system for removing the fish from the fish tank (1). This system is best shown in Fig. 1 and 2, showing the apparatus in two different positions, one lowered position (Fig. 1) and one raised position (Fig. 2). Note that the water level in the fish tank (1) conveniently is the same as the water surface of the surrounding sea, when the apparatus is in the raised position and in the lowered position. The water level inside the tank may however deviate slightly from the surrounding water.

[0021] The fish removal system comprises a tube or duct (12) that is coupled to an inlet (12a) close to the bottom of the tank, a lower end of the tube or duct (12) is open into the fish tank (1) below the water level in the fish tank (1) and the other, upper end of the tube or duct (12) is connected to a fish receptable (14) via a substantially horizontal section of the tube (12). A fish valve (15) can selectively open or close the flow through the tube (12). The fish receptacle may be located on a work deck, such as on a floating platform. Furter, the upper part of the tube or duct (12) has an inlet (9a) coupled to a supply tube of fresh water ("fresh water" in this context meaning water that is added to the tank, which may be seawater or water from a land source) via a valve (9). The inlet (9a) is conveniently arranged very close to the fish receptacle (14) and above the horizontal section of the tube (12), so that substantially the whole tube (12) is filled with water from the inlet (9a). Some of the water from the inlet (9a) may be allowed to flow into the fish receptacle (14).

[0022] When the fish is to be removed from the fish tank (1), the water level in the fish tank (1) is lowered by raising the apparatus, such as by pumping air into the ballast tanks (5) and at the same time opening the bottom valve (6) and valve (8) to let the necessary amount of water in the fish tank (1) leave the fish tank (1) due to the pressure difference created by lifting the tank (1). When the water level inside the fish tank (1) is just above the outlet of the tube or duct (12), the inlet valve (9) for water and the fish valve (15) are opened and the water will fill the tube or duct (12) and provide a continuous water flow into the fish tank (1). The fish in the fish tank (1) will start to swim into the tube or duct (12) due to its natural tendency to swim against the current. In this way, it is possible to lead the fish out of the fish tank (1) to another receptable with minimal stress for the fish.

[0023] As the tank (1) is lifted upwards in the body of water, the level of water in the tank is kept at substantially the same level at the water surface of the body of water. Hence the volume of water in the tank will be gradually reduced. The fish remaining in the tank will have less space and it will be easier for them to find the outlet to the tube (12). At the final stage of the lifting, it is also possible to give the tank a slight tilt towards the outlet, such as by shifting the ballast water in the ballast tanks (5) to one side. Alternatively, the bottom may be designed to be inclined towards the outlet (12a).

[0024] During the lifting of the tank (1), the water level inside the tank is kept substantially at the same level as the water surface outside the tank. Hence, the flow of water out of the tank though the outlet (6a) must be equivalent to the volume of water in the tank displaced upwards during the lifting plus the volume of water flowing into the tank though the tube (12) per time unit (the volume of fish escaping the tank is negligible in this context). By letting the water escape freely through the outlet (6a) the system is self-regulating, as long as the outlet has a sufficiently large diameter.

[0025] A lifting of the tank (1) may also be achieved without using ballast tanks. If the outlet is not fluidly connected to the surrounding sea, lifting can be achieved merely by pumping water out of the tank using a pump (not shown), optionally assisted by lifting with a crane. The crane only needs to be able to lift the weight of the tank and equipment fixedly attached to this, as there is no need to lift the water in the tank.

[0026] As can be readily seen from comparing figure 1 and figure 2, the fish receptacle (14) is located at the same level, which in the embodiment of figures 1 and 2 is immediately above the water level (13) outside of the fish tank (1), while the inlet to the tube (12) from the tank (1) is close to the bottom of the tank (1) and hence is lifted with the tank (1). Consequently, the vertical distance between the inlet to the tube (12) and the fish receptacle (14) will be shorter the higher the tank is lifted. The fish will therefore have a shorter vertical way to swim when the tank (1) is in the position of figure 2.

[0027] The above issue may be solved in multiple ways. One way would be that the tube (12) is flexible or have articulate bends that allow the fish receptacle (14) to be moved further away from the tank (1) as the tank (1) is lifted, while the fish receptacle is maintained at substantially the same vertical level.

[0028] Another way of solving this would be to have a tube (12) that has variable length that will be shortened during the raising of the tank (1). There are several ways of obtaining an extendable and retractable tube, such as a telescopic tube, a tube with folds, similar to an accordion, with ring-shaped folds or with a spiral fold extending along its length, or an elastic tube. With any of these embodiments, the fish will get a shorter overall length to swim as the tank is lifted. It is preferred that the length of the tube (12) becomes shorter as the tank (1) is lifted, so that the flow path

of the fish is as short as possible. This will also result in a lower frictional loss of the water supplied through the water inlet 9. A flexible tube is currently the preferred embodiment.

[0029] In a first preferred embodiment, the walls of the fish tank (1) are impervious for water. This means that the necessary water must be supplied to the fish tank (1) externally. This can for example be done by supplying water taken from a water depth of 10 meters or more and supply this water to the fish tank via the water inlet (3). By suppling water from a depth of 10 meters or more, it is possible to avoid that the water contains unwanted marine organisms, such as sea lice. Alternatively, the water supplied to the fish tank can be pre-processed, for instance by filtration or other treatment, to avoid unwanted marine organisms from entering the fish tank (1).

[0030] If this embodiment is used, the water in the fish tank (1) must be discharged via the outlet (6) in order to have a sufficient water flow through the fish tank (1) which provides the fish with the requisite amount of oxygen. If the water flow through the fish tank (1) is too low, additional oxygen gas must be provided. To keep the water level in the fish tank (1) constant, the amount of water discharged from the fish tank (1) must be balanced with the amount of water supplied to the fish tank (1).

[0031] Since the presence of sea lice and other unwanted marine organisms in most places vary with water temperature, sunlight, ocean currents, there might be times of the year when these organisms are not present in the water surrounding the fish tank (1). In such cases, the fish tank (1) can be provided with movable hatches in the walls of the fish tank (1). The corresponding openings that are uncovered when the hatches are opened, can be covered with a suitable material, such as a net, grid or similar, which are sufficiently permeable to for water to provide a requisite water flow through the fish tank (1) and at the same time prevents the fish from escaping.

[0032] Further the fish tank (1) can be provided with additional equipment normally present in fish pens used for aquaculture, such as dead fish collector, collection devices for surplus fish meal, feces etc.

[0033] As illustrated in figure 3 the tank (1) may be lifted on board a vessel for transportation between different sites. It is also convenient to transport the tank (1) to land for cleaning, inspection, repair, and disinfection. To allow for placement on the deck of the vessel, the tank is equipped with support legs 11, or alternatively a

support ring that extend below the ballast tanks, piping and valves on the underside of the tank. The tank (1) may also be transported with fish therein. This can be done with the tank (1) floating in the sea. A special vessel may be used for this, which has an opening, e.g., U-shaped, to receive the tank. The vessel will then be driven towards the tank until the tank has been received within the opening. Here the tank will be securely moored to the vessel. Such transportation is very gentle to the fish, as it is no need for removing the fish rom the tank before transport.

[0034] Figure 4 shows an optional feature of the present invention. In this figure the ballasting system (2, 4, 5), the water outlet piping (6, 7, 8) and the legs (11) have been removed for clarity, but it should be understood that these items may be present as required.

[0035] An outlet pipe (16) and an inlet pipe (17) are fluidly coupled to the tank (1) at or close to the bottom. The outlet pipe (16) has a shut-off valve (16a) and a non-return valve (16b). The non-return valve (16b) opens for flow out of the tank (1) and prevents flow into the tank (1). The inlet pipe (17) also has a shut-off valve (17a) and a non-return valve (17b). The non-return valve (17b) opens for flow into the tank (1) and prevents flow out of the tank (1). A feed line 18 is coupled to the inlet pipe (17) between the shut-off valve (17a) and the non-return valve (17b).

[0036] The inlet and outlet pipes (16, 17) are used to change a large proportion of the water in the tank during normal operation, if required. Normal operation of the tank is when fish is kept for a longer time in the tank, such as for breeding fish from a small size to a larger size. To change the water, the ballast tanks (5) are filled with air to lift the tank (1) and at the same time the shut-off valve 16a is opened. Water will then flow out of the tank (1) through the outlet pipe (16). The non-return valve (16b) will open to the flow in this direction.

[0037] When the required proportion of the water has flowed out of the tank (1) (it should be noted that a sufficient amount of water has to be left in the tank (5) for the fish to survive), the ballast tanks are again filled with water to lower the tank (1). At the same time the shut-off valve (16a) is closed, and the shut-off valve (17a) is opened. Water will then flow into the tank (1). The non-return valve (17b) will open to flow in this direction. It is possible to add fish fodder to the water through a feed line (18) as the tank is lowered.

[0038] It should be noted that the non-return valves (16b, 17b) are a precaution in case the shut-off valves are not operating properly, preventing a closure of the pipes (16, 17). It should also be noted that the pipe (16, 17) may be integrated into a single piping system with a single connection to the tank (1).

List over reference numerals

| | |
|---|---|
| 1 | Fish tank |
| 2 | Inlet pressurized air |
| 3 | Inlet fresh water |
| 4 | Exhaust air |
| 5 | ballast tanks |
| 6 | Bottom valve fish tank |
| 6a | Water outlet |
| 7 | Valve for suction from fish tank |
| 8 | Valve for ballast water |
| 9 | Fresh water valve |
| 9a | Fresh water inlet |
| 10 | Open outlet ballast tank |
| 11 | Support legs/ring for tank |
| 12 | Fish tube |
| 12a | Fish outlet |
| 13 | Water level |
| 14 | Fish receptable |
| 15 | Fish outlet valve |
| 16 | Outlet pipe |
| 16a | Outlet shut-off valve |
| 16b | Outlet non-return valve |
| 17 | Inlet pipe |
| 17a | Inlet shut-off valve |
| 17b | Inlet non-return valve |
| 18 | Feed line |

## Claims

1. An apparatus for moving live fish from a fish tank (1) to outside of the fish tank (1), comprising a water-impenetrable bottom and water-impenetrable sidewalls and an open top; the tank (1) being floatable in a body of water with its upper part above the surface (13) of the body of water; at least one water inlet (12a) to the tank (1), the water inlet (12a) being coupled to a fish removal tube (12) or duct, which at an opposite end is coupled to a fish receptacle (14) that is configured to be arranged above the surface (13) of the body of water; the tube (12) having a fresh water inlet (9a) supplying water from an external water source through the tube (12) and into the tank (1) and thereby creating a flow against which fish is invited to swim, **characterized in** that it comprises a water outlet (6a) from the tank (1) and lifting means lifting the tank (1) upwards in the body of water while letting water inside the tank (1) flow out of the tank (1) through said water outlet (6a).

2. The apparatus of claim 1, wherein the lifting means comprise at least one ballast tank (5) providing positive buoyancy to the tank (1).

3. The apparatus of claim 2, wherein said at least one ballast tank (5) is coupled to a pressurized air supply and has an outlet to the body of water.

4. The apparatus of claim 2 or 3, wherein the at least one ballast tank (5) is arranged below the bottom of the tank (1).

5. The apparatus of claim 1, wherein the lifting means comprise a pump configured to pump water out of the tank (1) through said water outlet (6a).

6. The apparatus of any of the claims 2-5, wherein the lifting means comprise a crane.

7. The apparatus of any of the preceding claims, wherein said water outlet (6a) is at the bottom of the tank (1) and is equipped with at least one valve (6).

8. The apparatus of any of the preceding claims, wherein said fish removal tube (12) is coupled to the tank (1) close to or at a bottom thereof.

9. The apparatus of any of the preceding claims, wherein said fresh water inlet (9a) is coupled to said fish removal tube (12) close to said fish receptacle (14).

10. The apparatus of claim 9, wherein said fresh water inlet (9a) is coupled to said fish removal tube (12) above a horizontal section of said tube (12).

11. The apparatus of any of the preceding claims, wherein said fish removal tube (12) is a flexible tube.

12. The apparatus of any of preceding claims, wherein said fish removal tube has articulate joints.

13. The apparatus of any of the preceding claims, wherein said tube has a variable length.

14. The apparatus of claim 13, wherein the variable length tube is a telescopic tube, a tube with folds, such as ring-shaped folds or with a spiral fold extending along its length or is an elastic tube.

15. A method of removing fish from a floating fish tank with water-impermeable bottom and sidewalls, said fish tank floating in a body of water with an upper part above a surface (13) of said body of water, comprising the steps of:

a. coupling a fish removal tube (12) to said tank (1), said fish removal tube (12) extending to above said water surface (13),

b. providing a water flow through said fish removal tube into said tank (1),

c. letting fish swim against said water flow through said fish removal tube (12) to a fish receptacle (14) arranged above the surface (13) of the body of water,

d. lifting said tank (1) upwards in the body of water, and

e. allowing water to escape from said tank (1) while lifting said tank (1).

16. The method of claim 15, wherein said water escapes said tank (1) by free flowing into the surrounding body of water.

17. The method of claim 15, wherein said water is pumped out of said tank (1) during lifting and thereby increasing the buoyancy of the tank (1).

18. The method of claim 15, 16 or 17, wherein said lifting is performed by ballasting the tank (1) to provide the tank with positive buoyancy.

19. The method of any of the preceding claims 15 – 18, wherein said flow through said fish removal tube (12) is achieved by letting water into said tube (12) close to said fish receptacle (14).

20. The method of any of the preceding claims 15 - 19, wherein the water level (13) inside the tank (1) is kept at substantially the same level as the water surface of the body of water during the lifting of the tank (1) and the removal of fish.

21. The method of any of the preceding claims 15 – 20, wherein said fish receptacle (14) is kept at a substantially constant level during the lifting of the tank (1).

22. The method of claim 21, wherein the fish removal tube (12) is flexible, has articulate joints or has a variable length.

Patentkrav

1. Et apparat for å flytte levende fisk fra en fisketank (1) til utsiden av fisketanken (1), omfattende en vann-ugjennomtrengelig bunn og vann-ugjennomtrengelige sidevegger og en åpen topp, der tanken (1) er i stand til å flyte i en vannmasse med sin øvre del over overflaten (13) av vannmassen; minst ett vanninntak (12a) til tanken (1), der vanninntaket (12a) er koblet til et fiskefjerningsrør (12) eller kanal, som i den motsatte enden er koblet til en fiskemottaker (14) som er konfigurert til å være plassert over overflaten (13) av vannmassen, der røret (12) har et ferskvannsinnløp (9a) som tilfører vann fra en ekstern vannkilde gjennom røret (12) og inn i tanken (1) og dermed skaper en strøm mot hvilken fisken inviteres til å svømme, **karakterisert ved** at det omfatter et vannuttak (6a) fra tanken (1) og løftemidler som løfter tanken (1) oppover i vannmassen mens vannet inne i tanken (1) får strømme ut av tanken (1) gjennom nevnte vannuttak (6a).

2. Apparatet ifølge krav 1, hvor løftemidlene omfatter minst én ballasttank (5) som gir positiv oppdrift til tanken (1).

3. Apparatet ifølge krav 2, hvor nevnte minst éne ballasttank (5) er koblet til en trykkluftforsyning og har et utløp til vannmassen.

4. Apparatet ifølge krav 2 eller 3, hvor nevnte minst éne ballasttank (5) er plassert under bunnen av tanken (1).

5. Apparatet ifølge krav 1, hvor løftemidlene omfatter en pumpe konfigurert til å pumpe vann ut av tanken (1) gjennom nevnte vannuttak (6a).

6. Apparatet ifølge et hvilket som helst av kravene 2-5, hvor løftemidlene omfatter en kran.

7. Apparatet ifølge et hvilket som helst av de foregående kravene, hvor nevnte vannuttak (6a) er i bunnen av tanken (1) og er utstyrt med minst én ventil (6).

8. Apparatet ifølge et hvilket som helst av de foregående kravene, hvor nevnte fiskefjerningsrør (12) er koblet til tanken (1) nær eller ved bunnen av denne.

9. Apparatet ifølge et hvilket som helst av de foregående kravene, hvor nevnte ferskvannsinnløp (9a) er koblet til nevnte fiskefjerningsrør (12) nær nevnte fiskemottaker (14).

10. Apparatet ifølge krav 9, hvor nevnte ferskvannsinnløp (9a) er koblet til nevnte fiskefjerningsrør (12) over en horisontal seksjon av nevnte rør (12).

11. Apparatet ifølge et hvilket som helst av de foregående kravene, hvor nevnte fiskefjerningsrør (12) er et fleksibelt rør.

12. Apparatet ifølge et hvilket som helst av de foregående kravene, hvor nevnte fiskefjerningsrør har leddede skjøter.

13. Apparatet ifølge et hvilket som helst av de foregående kravene, hvor nevnte rør har variabel lengde.

14. Apparatet ifølge krav 13, hvor røret med variabel lengde er et teleskoprør, et rør med folder, slik som ringformede folder eller med en spiralformet fold som strekker seg langs lengden, eller er et elastisk rør.

15. En fremgangsmåte for å fjerne fisk fra en flytende fisketank med vann-ugjennomtrengelig bunn og sidevegger, der nevnte fisketank flyter i en vannmasse med en øvre del over en overflate (13) av nevnte vannmasse, bestående av trinnene:

a. koble et fiskefjerningsrør (12) til nevnte tank (1), der nevnte fiskefjerningsrør (12) strekker seg til over nevnte vannoverflate (13),

b. tilveiebringe en vannstrøm gjennom nevnte fiskefjerningsrør inn i nevnte tank (1),

c. la fisken svømme mot nevnte vannstrøm gjennom nevnte fiskefjerningsrør (12) til en fiskemottaker (14) plassert over overflaten (13) av vannmassen,

d. løfte nevnte tank (1) oppover i vannmassen, og

e. la vannet slippe ut av nevnte tank (1) mens tanken (1) løftes.

16. Fremgangsmåte ifølge krav 15, hvor nevnte vann slipper ut av tanken (1) ved fri strømning til i den omkringliggende vannmassen.

17. Fremgangsmåten ifølge krav 15, hvor nevnte vann pumpes ut av tanken (1) under løfting og dermed øker oppdriften til tanken (1).

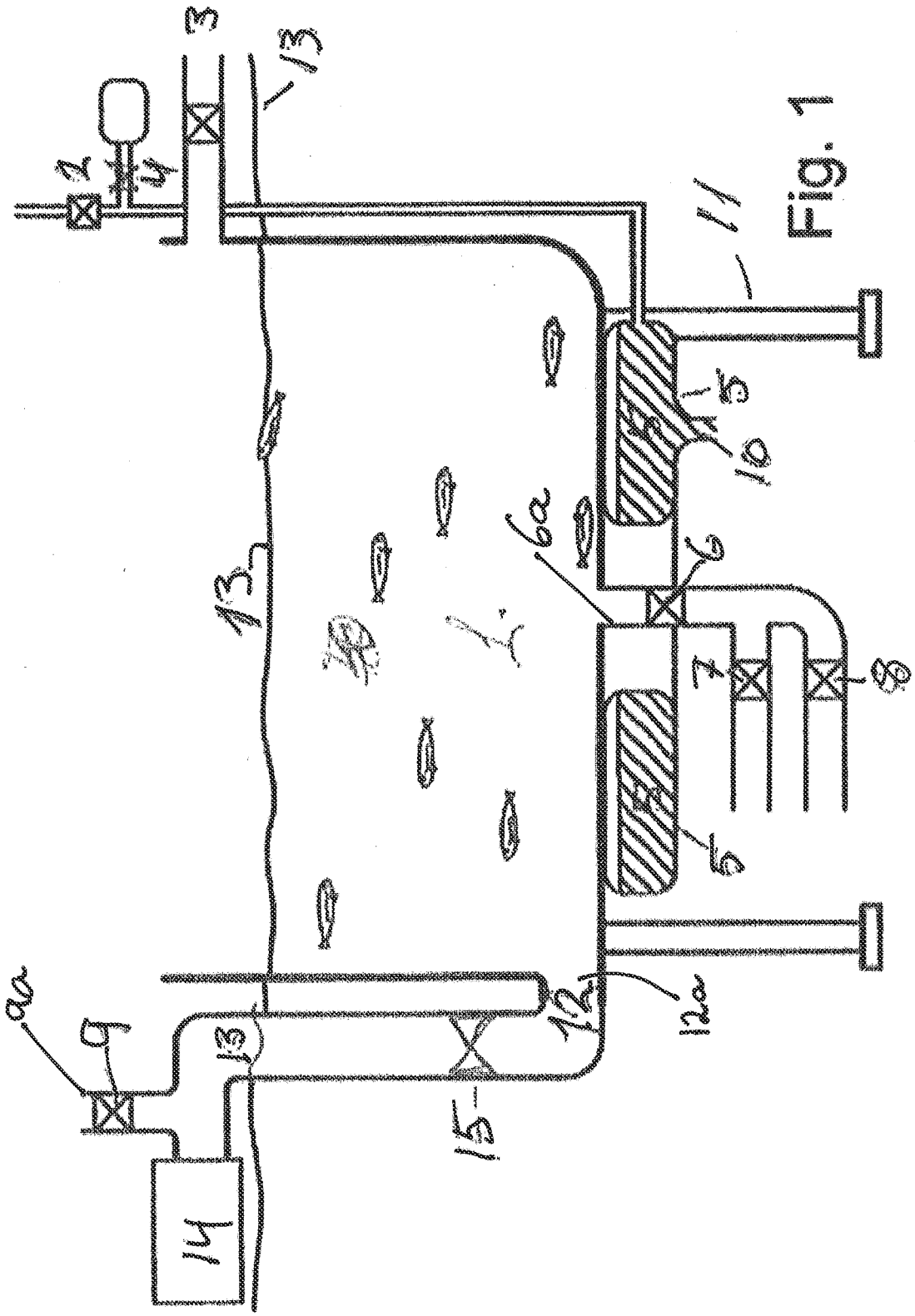


Fig. 1

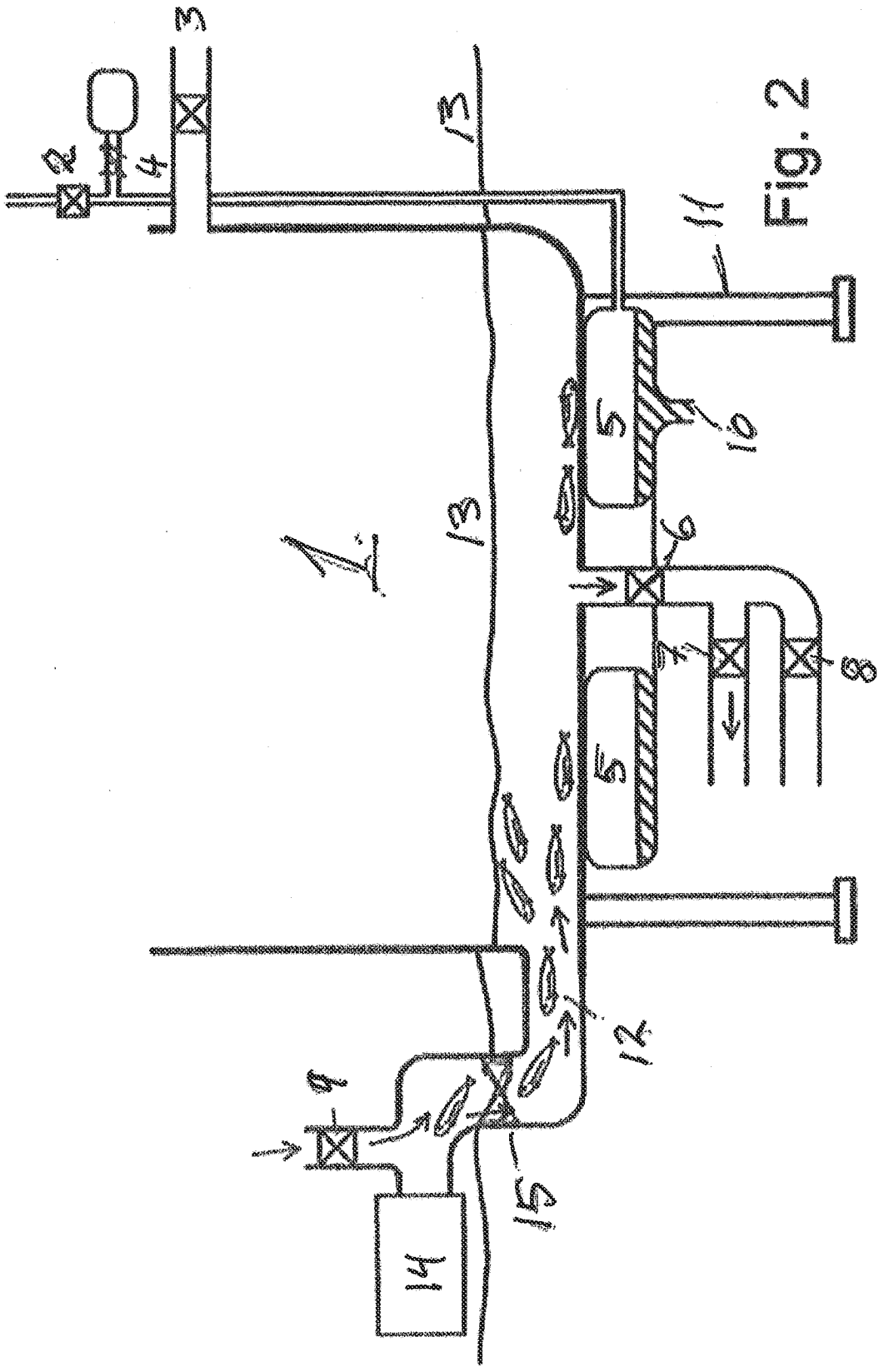


Fig. 2

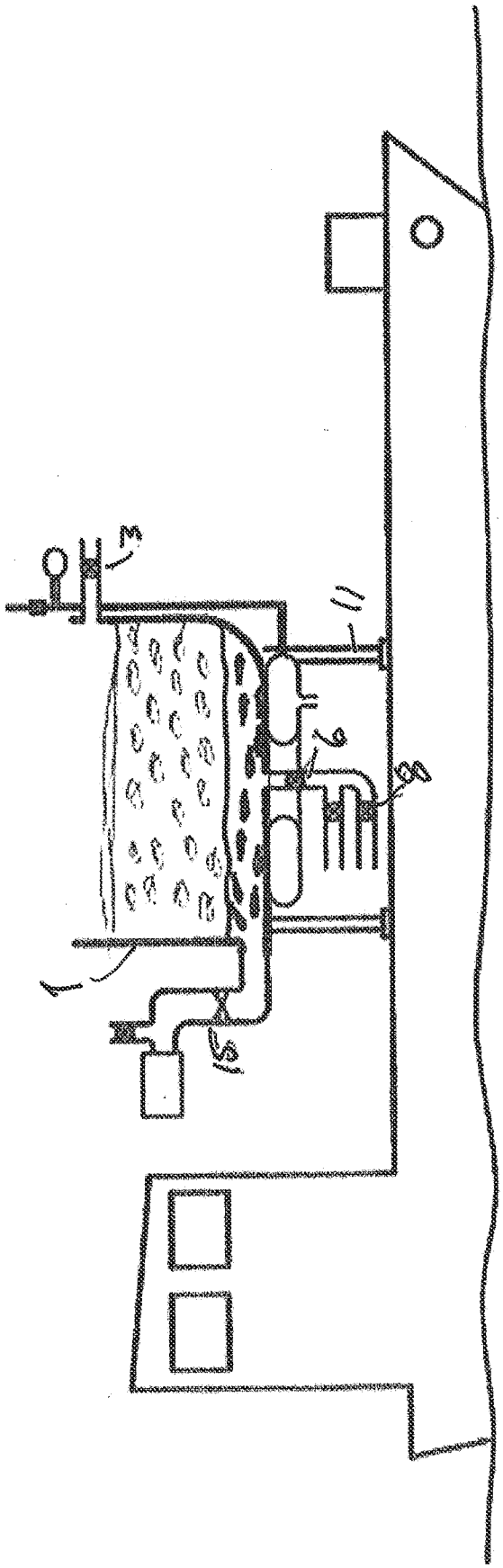


Fig. 3

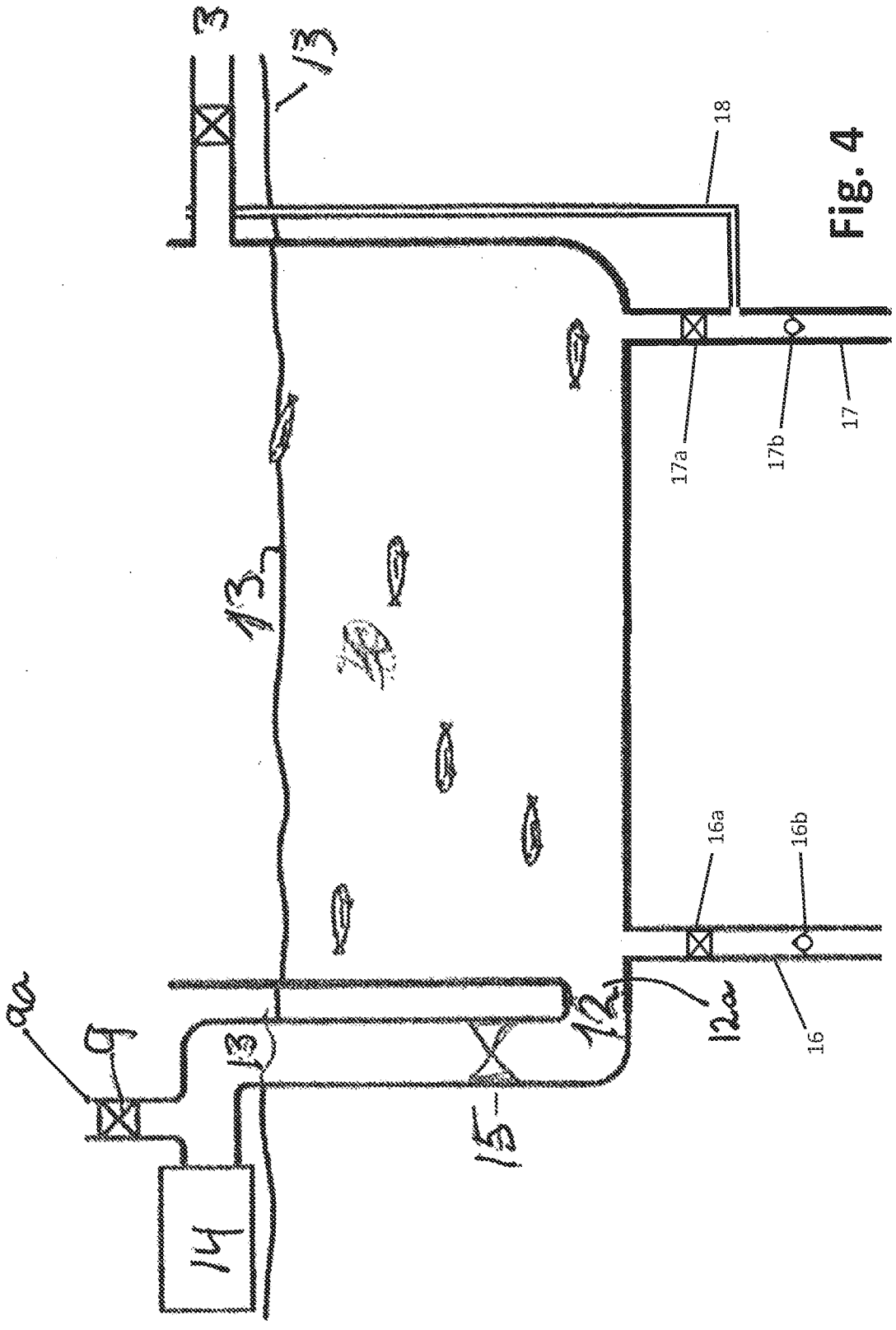


Fig. 4