(19) Octrooicentrum Nederland

(11) **2013178**

(12) B1 **OCTROOI**

(21) Aanvraagnummer: **2013178**

(22) Aanvraag ingediend: **14/07/2014**

(51) Int. Cl.:
B63B 1/08 (2006.01) **B63B 1/04** (2006.01) **B63B 1/24** (2006.01) **B63B 1/40** (2006.01) **B63B 39/06** (2006.01) **B63B 39/00** (2006.01) **B63B 1/36** (2006.01) **B63B 1/06** (2006.01)

(43) Aanvraag gepubliceerd:
-

(47) Octrooi verleend:
13/09/2016

(45) Octrooischrift uitgegeven:
24/11/2016

(73) Octrooihouder(s):
Van Oossanen & Associates B.V. te Wageningen.

(72) Uitvinder(s):
Pieter van Oossanen te Wageningen.

(74) Gemachtigde:
ir. J.M.G. Dohmen c.s. te Eindhoven.

(54) **Vessel comprising an aft foil oriented to provide a forwardly directed component of lift force.**

(57) The invention relates to a vessel for operating on a body of water comprising: a non-planing hull having a waterline and a longitudinal direction with a forward portion, an aft portion, and a central portion, the hull being configured to have the aft portion with a smaller water displacement relative to a water displacement at the central portion; and an aft foil affixed to the aft hull portion with one or more connecting members, and below the surface of the water, and spaced from the hull, the aft foil having a span, a chord, and a leading edge and a trailing edge relative to a forward direction, wherein the leading edge of the aft foil is tilted at a downward angle relative to the horizontal, wherein the aft foil has a chord and profile in longitudinal cross section, with a configuration to provide a lifting force, the tilt angle of the chord of the aft foil being measured with respect to the horizontal, and wherein the aft foil is oriented to provide a continuous, upward, forwardly directed component of the lifting force.

NL B1 2013178

Dit octrooi is verleend ongeacht het bijgevoegde resultaat van het onderzoek naar de stand van de techniek en schriftelijke opinie. Het octrooischrift komt overeen met de oorspronkelijk ingediende stukken.

Vessel comprising an aft foil oriented to provide a forwardly directed component of lift force

Field of the invention

[0001] The present invention relates to a vessel comprising an aft foil, such as a sailing vessel or a motorized vessel.

Background of the invention

[0002] Such a vessel is known from the prior art, i.e. a vessel having an aft foil for influencing the trim condition of the vessel. This is especially important in higher speed ranges.

[0003] A disadvantage of the known vessel is that the aft foil adds to the total drag of the vessel or at least does not develop a forward-directed propulsion force.

[0004] It is an object of the present invention to provide a vessel with an aft foil, wherein the aft foil develops a forward-directed propulsion force.

Summary of the invention

[0005] Thereto, the vessel for operating on a body of water according to the invention comprises:

a non-planing hull having a waterline and a longitudinal direction with a forward portion, an aft portion, and a central portion, the hull being configured to have the aft portion with a smaller water displacement relative to a water displacement at the central portion; and

an aft foil affixed to the aft hull portion with one or more connecting members, and below the surface of the water, and spaced from the hull, the aft foil having a span, a chord, and a leading edge and a trailing edge relative to a forward direction,

wherein the leading edge of the aft foil is aligned with the horizontal or tilted at an upward or downward angle relative to the horizontal,

wherein the aft foil has a chord and profile in longitudinal cross section, with a configuration to provide a lifting force, the tilt angle of the chord of the aft foil being measured with respect to the horizontal,

and wherein the aft foil is oriented to provide a continuous, forward-directed component of the lift force.

[0006] The aforementioned angle (α) preferably lies in the range of -15° to 5°, more preferably is around -1, 0 or 1°.

[0007] An embodiment relates to a vessel, wherein the aft foil is connected to the aft hull portion by means of a pair of connecting members, the aft foil in spanwise direction being symmetrical with respect to a vertical mirror plane, wherein each of the connecting members connect to the aft foil in a junction region at a spanwise distance from the mirror plane being 25 to 50%, preferably 30 to 50 %, more preferably 40 to 50% of the span of the aft foil. By placing the connecting members at a more outward position, the inventor has found that the flow over the aft foil itself, in particular the flow over the upper surface of the aft foil, can be positively influenced, especially the part of the aft foil extending between the connecting members. Furthermore, from a construction point of view, placing the connecting members at a more outward position reduces the likelihood of flutter that may occur at the tips of the aft foil when unstable flow conditions occur there.

[0008] An embodiment relates to a vessel, wherein the connecting members are located at the extremities of the foil, at the foil tips. The positive influence thereof on the aft foil extending between the connecting members is most prevalent when the connecting members connect to the foil tips, i.e. to the most outward positions of the aft foil.

[0009] An embodiment relates to a vessel, wherein the connecting members have a leading edge sweep angle, in elevation view, of 0 to 40°, preferably 20 to 40°, more preferably 30 to 40°, with respect to the vertical. The inventor has found from experiments that the stated sweep angles reduce drag caused by the connecting

members themselves considerably. Less leading edge sweep in practice appears to increase drag and cause the boundary layer around the connecting part of the foil to detach more quickly. More leading edge sweep makes it relatively difficult to provide the necessary structural strength to the connecting members. It should be noted that the leading edge sweep angle will increase, such as by 20°, in case the respective connecting member is tapered.

[0010] An embodiment relates to a vessel, wherein the connecting members each comprise a rounded shape in a transverse vertical plane such as to afford a gradual transition from the foil to the vertical in the junction region. The inventor has found from experiments that the drag caused by the combined arrangement of the aft foil and the connecting members is reduced by the rounded shape. At the same time, the aft foil in practice appears to benefit from a spill-over effect caused by the lift generated by the connecting members (even small amounts) amplifying the forward-directed component of the lift of the aft foil. Preferably, the rounded junction region is shaped by means of a milling process or comprises a milled body, since warping may be significant in the rounded region (due to the occurrence of a significant change in the angle of attack setting of the connecting member from a vertical part of the connecting member to another part thereof or the aft foil) and since other manufacturing techniques prove to be very tedious, inaccurate or very expensive in this regard. Additionally, in the junction region, the trailing edge of the aft foil may also be rounded (when seen in plan view).

[0011] An embodiment relates to a vessel, wherein the rounded shape in the junction region has a maximum inner bend radius of 1 times the chord length of the aft foil, and a minimum inner bend radius of 0.5 times the chord length of the aft foil. The inventor has found this dimensioning of the rounded shape to provide optimal results in connection with drag reduction. Larger bend radii would lessen the generation of the optimal lift force by the aft foil, whereas smaller radii would reduce the aforementioned spill-over effect of lift or worse, increase drag of the combined connecting member-aft foil arrangement.

[0012] An embodiment relates to a vessel, wherein a sweep angle, in plan view, of (the leading edge of) the aft foil is 15 to 25°, more preferably 5 to 15°, even more preferably 0 to 5°. Especially at higher speeds, a moderate sweep angle in practice reduces drag. However, the inventor has found that when the aft foil is placed relatively close to the aft/stern of the vessel or at a position where hull displacement decreases relatively rapidly towards the stern of the vessel, an increasingly smaller sweep angle or even a slight forward sweep angle may be beneficial.

[0013] An embodiment relates to a vessel, wherein at least half the chord of the aft foil is behind a vertical line through the location where the aft portion of the hull leaves the water. Through experiments the inventor has found that the stern wave contains sufficient flow energy, and the required flow conditions, to generate a useful forward-directed lift component.

[0014] An embodiment relates to a vessel, wherein the connecting members possess a streamlined section shape with respect to the forward direction with a chord length of 0.8 to 1.2 times the chord length of the aft foil. Larger chord lengths cause increased drag, while smaller chord lengths are often not possible from a strength point of view. Preferably, when seen in elevation view, the leading edge of the connecting member intersects the aft foil at a location aft of the leading edge of the aft foil, by as much as 20 to 40%, more preferably by 30 to 40%, of the aft foil's chord length.

[0015] An embodiment relates to a vessel, wherein the chord length of the connecting members taper from a first chord length at a junction with the hull to a relatively smaller second chord length at the junction with the aft foil, the taper ratio being 0.5 to 0.9, preferably 0.5 to 0.7, more preferably around 0.5. Interference drag caused by cross-over flow from the connecting members in the junction region is found to be relatively minimal for these values, in particular at higher speeds.

[0016] An embodiment relates to a vessel, wherein the chord length of the aft foil tapers from a first chord length at the mirror plane to a relatively smaller second chord length at a foil tip, the taper ratio being 0.5 to 1.0, preferably 0.7 to 0.9, more

preferably around 0.8. The above taper ratios lead to relatively high lift to drag ratio values.

[0017] An embodiment relates to a vessel, wherein, during use, in the longitudinal direction the central portion of the hull displays a pressure transition region, wherein the pressure force on the hull changes from increasing drag forward of this region, to reducing drag aft of this region, wherein a forward foil is positioned in front of the pressure transition region. The inventor has found during extensive experimenting that a phenomenon dubbed (for now) 'pressure reflection' occurs, i.e. whereby the low pressure on the upper side of the forward foil is continued on the hull above. From the aforementioned experiments it appears that this phenomenon leads to a higher hull drag if the forward foil is arranged at a position where the hull benefits from a high pressure (aft of the pressure transition region) and to a lower hull drag if the forward foil is arranged at a position where the hull benefits from a low pressure (forward of the pressure transition region). Therefore, the forward foil is to be positioned forward of this pressure transition region. For the same reason the aft foil is to be positioned aft of the pressure transition region and preferably at least partly behind the submerged part of the hull to avoid the increase in drag caused by pressure reflection.

[0018] The forward foil is advantageously used to bring the longitudinal trim of the vessel back to a horizontal orientation at higher vessel speeds when the aft foil develops high lift values. The skilled person should be aware that the forward foil is not intended to be used to obtain a hydrofoil vessel wherein forward and aft foils are used to lift the hull above the water at high speeds.

[0019] Preferably, the aft and forward foils (and in particular the forward foil) are configured to keep at least 30% to 90%, more preferably 50% to 70%, of the submerged volume of the vessel below the waterline. The inventor has found from experiments that these displacement values allow for the development of a greater (forward-directed) component of the lift force by the aft foil, without the vessel adopting a bow-down trim condition. The vessel's longitudinal stability is thereby also not compromised. Therein, the forward foil may also utilize the 'pressure reflection' phenomenon to decrease the drag of the forward hull portion.

[0020] An embodiment relates to a vessel, wherein the forward foil in spanwise direction is symmetrical with respect to the vertical mirror plane, wherein the forward foil has a dihedral angle, such that the distance of the foil from the hull remains substantially the same along the span of the foil. The inventor has found that by doing so the 'pressure reflection' phenomenon is optimally taken advantage of.

[0021] An embodiment relates to a vessel, wherein the dihedral angle is 5 to 50°, preferably 10 to 30°, more preferably around 20° depending on the local form of the hull of the vessel. These values were found to optimize the 'pressure reflection' phenomenon, without compromising the transverse stability of the vessel.

[0022] An embodiment relates to a vessel, wherein an aspect ratio of the forward foil is at least 4.0, preferably in excess of 5.0. The inventor has found that otherwise the induced drag of the forward foil may become too high.

[0023] An embodiment relates to a vessel, wherein an aspect ratio of the aft foil is approximately 4.0 to 7.0, preferably in excess of 5.0. It was found that for lower aspect ratios, the aft foil starts to suffer from a relatively high induced drag.

[0024] An embodiment relates to a vessel, wherein the span of both the forward and aft foil is at most 90% of a vessel's hull width at the longitudinal position of the respective foil. A higher foil span in practice proves to be impractical.

[0025] An embodiment relates to a vessel, wherein the forward foil is tilted at a tilting angle (φ) with the leading edge upwards 0 to 10° with respect to the horizontal. At these tilt angles, the generation of useful forward foil lift appears to be optimal.

[0026] An embodiment relates to a vessel, wherein the connecting members comprise a foil with a chord, and a leading edge and a trailing edge relative to a forward direction,

wherein the connecting member foil has a chord and profile in longitudinal cross section, with a configuration to provide a lifting force,

and wherein the connecting member foil is oriented to provide a continuous, sideways and forward-directed component of the lifting force to amplify the forward-directed component of the lift generated by the aft foil.

[0027] The inventor has found that by giving the connecting member a configuration to provide a forward-directed component of the lifting force, e.g. by turning the (chord of the) connecting member foil inwards or outwards (depending on the local flow direction) or for instance by giving the connecting member foil camber, the connecting member foil starts to contribute to the forward-directed lift generation of the main foil/connecting member arrangement. The inventor attributes this due to the flow below the aft portion of the vessel being directed slightly inwards and due to the flow below the forward portion of the vessel being directed slightly outwards. The protection conferred by the appended set of claims is not to depend on the validity of this theory, however.

[0028] An embodiment relates to a vessel, wherein an angle between the chord of the connecting member foil, and the vertical mirror plane is between 0 to 10°, such as around 5° in the case of the aft foil, and between 0 to -10°, such as around -5°, in the case of the forward foil. These values prove to be optimal to benefit from the inward- and outward-directed flow below the aft- and forward portion of the vessel respectively, at the tip of the foil, such that a significant sideways- and forward-directed component of the lift force is created which increases the forward-directed component of the lift generated by the main foil. From experiments it was found that an additional forward-directed component of the lift force of 5 to 10% can be obtained, relative to the forward-directed component of the lift on the aft and forward foil alone with 'conventionally' designed/oriented connecting members.

[0029] In an embodiment, the connecting members are each connected to the aft foil by means of a nacelle, preferably at a connection point at a spanwise distance from the mirror plane of 30 to 40% of the span of the aft foil. The nacelle is shaped in such a way that, when viewed in the flow direction, a smooth change in cross-sectional area of the combined aft foil/connecting members/nacelle arrangement is provided (as encountered by the flow). To this end, a forward part of the nacelle may have a conical

or rounded shape. Preferably, the nacelle has a bullet-like shape. The inventor has found that, in particular when the connecting members have a leading edge sweep, it is important for the forward part of the nacelle to protrude forwards with respect to the leading edge of the aft foil (and the leading edge of the respective connecting member) at the connection point as to obtain a gradual increase in cross-sectional area. By providing the connection point at 30 to 40% of the span of the aft foil an optimal balance is achieved between structural requirements on the one hand and hydrodynamic (drag) considerations on the other hand.

[0030] An embodiment relates to a vessel, wherein the forward foil is connected to the central or forward hull portion in front of the pressure transition region by means of one or more, such as a pair, of connecting members, the connecting members being defined with respect to the forward foil and the forward hull portion, mutatis mutandis, by means of the connecting member-related features as described with respect to the aft foil at the aft portion of the vessel.

Brief description of the drawings

[0031] Embodiments of a vessel according to the invention will by way of non-limiting example be described in detail with reference to the accompanying drawings. In the drawings:

[0032] Figure 1 shows a schematic elevation view of a first exemplary embodiment of a vessel according to the invention;

[0033] Figure 2 shows a schematic plan view of the first exemplary embodiment of the vessel of figure 1;

[0034] Figure 3 shows a rear view of the first exemplary embodiment of the vessel of figure 1 and 2;

[0035] Figure 4 shows a detailed elevation view of the aft foil of the first exemplary embodiment of figure 1 and 2.

[0036] Figure 5 shows a front view of the forward foil of a second exemplary embodiment of the vessel;

[0037] Figure 6 shows a detailed plan view of the connecting member of a third exemplary embodiment of the vessel;

[0038] Figure 7 shows a schematic bottom view of a fourth exemplary embodiment of the vessel; and

[0039] Figure 8 shows a detailed perspective view of another exemplary embodiment of the aft foil of figure 4.

Detailed description of the invention

[0040] Figures 1-3 respectively show a schematic elevation view, plan view and rear view of a first exemplary embodiment of a vessel 1 according to the invention.

[0041] A vessel 1 is shown for operating on a body of water 2 comprising a non-planing hull 3, such as a sailing vessel or a motorized vessel. A waterline 4 is shown as the delimitation between the water body 2 and the air above. A longitudinal direction is indicated by reference numeral 5. The hull 3 comprises a forward portion 6, an aft portion 8 and a central portion 7. The hull 3 is configured to have the aft portion 8 with a smaller water displacement relative to a water displacement at the central portion 7. An aft foil 9 is affixed to the aft hull portion 8, situated below the surface of the water, and spaced from the hull 3. The aft foil 9 has a span (ba, see figure 2), a chord (ca), and a leading edge 10 and a trailing edge 11 relative to a forward direction 12 (see figures 2 and 3). The leading edge 10 of the aft foil 9 is tilted at a downward angle α relative to the horizontal (see figure 4). The aft foil 9 has a chord and profile in elevation view, with a configuration to provide a lifting force La, the tilt angle of the chord of the aft foil being measured with respect to the horizontal. Therein, the aft foil 9 is oriented to provide a continuous, upward, forwardly-directed component of the lifting force, La12.

[0042] The chord length (ca) of the aft foil 9 may taper from a first chord length at a vertical mirror plane 14 to a relatively smaller second chord length at a foil tip 15 (see figure 2), the taper ratio being 0.5 to 1.0, preferably 0.7 to 0.9, more preferably around 0.8.

[0043] As indicated in figure 1, in the longitudinal direction 12 the central hull portion 7 comprises a pressure transition region 18, wherein the pressure force on the hull 3 changes from increasing drag forward of this region, to decreasing drag aft of this region. A forward foil 19 is to be positioned in front of the pressure transition region 18. Analogously, the aft foil 9 is to be positioned aft of the pressure transition region 18, preferably at least partly aft of where the submerged part of the hull ends.

[0044] Preferably, the aft and forward foils 9, 19 are configured to develop lift to keep at least 30 to 60% of the submerged volume of the vessel 1, when stationary, below the waterline 4, as the inventor does not seek to lift the hull 1 completely from the water.

[0045] A tilting angle φ of the forward foil 19, as indicated in figure 1, may be 0 to 10° with respect to the horizontal. As shown in figure 2, a leading edge sweep angle γ of the aft foil 9 with respect to the mirror plane 14 may be -15 to 25°, more preferably -5 to 15°, even more preferably 0 to 5°.

[0046] Figure 3 shows a rear view of the first exemplary embodiment of the vessel of figure 1 and 2. The aft foil 9 is connected to the aft hull portion 8 by means of a pair of connecting members 13. The aft foil 9 is symmetrical with respect to a vertical mirror plane 14 in spanwise direction. Each of the connecting members 13 connect to the aft foil 9 at a spanwise distance D1 from the mirror plane 14 being 25 to 50%, preferably 30 to 50 %, more preferably 40 to 50% of the span (ba) of the aft foil 9. Most preferably, the connecting members 13 of the aft foil 9 are connected to the foil tips 15, at 50% of the span (ba) from the mirror plane 14.

[0047] As shown in figure 3, the connecting members 13 each connect to the foil tip 15 in a junction region 16. The junction region 16 may have a rounded shape in a vertical transverse plane so as to provide a smooth transition between each connecting member

13 and the aft foil 9. The rounded shape in the junction region preferably has a maximum inner bend radius Ri of 1 times the chord length (ca) of the aft foil 9, and a minimum inner bend radius of 0.5 times the chord length (ca) of the aft foil 9. Additionally, when seen in plan view, the trailing edge 11 of the aft foil may be rounded in the junction region 16.

[0048] Figure 4 shows a detailed elevation view of the aft foil 9 of the first exemplary embodiment of figure 1 and 2. As shown, the connecting members 13 may have a leading edge sweep angle β of 0 to 40°, preferably 20 to 40°, more preferably 30°to 40° with respect to the vertical. Analogously, the trailing edge of the connecting members 13 may also be provided with a sweep angle, preferably with a smaller sweep angle than at the leading edge. In case of taper, β may increase by 20°, such as to 20 to 60°.

[0049] The chord length (cc) of the connecting members 13 may taper from a first chord length at the intersection with the hull of the connecting members 13 at the aft hull portion 8 to a relatively smaller second chord length at a position where the connecting members 13 connect to the aft foil 9, the taper ratio being 0.5 - 0.9, preferably 0.5 - 0.7, more preferably around 0.5.

[0050] As stated, figure 5 shows a front view of the forward foil 19 of a second exemplary embodiment of the vessel 1. The forward foil 19 in spanwise direction is symmetrical with respect to the vertical mirror plane 14. The forward foil 19 preferably has a dihedral angle ∂, i.e. an upward angle with respect to the horizontal plane. The distance D2 from the hull 3 at a position in the mirror plane 14 and the dihedral angle ∂ are to be so chosen that in spanwise direction of the forward foil 19 a substantially constant distance D3 from the hull 3 is maintained. The dihedral angle may be 5 to 50°, preferably 10 to 30°, more preferably around 20°. An aspect ratio of the forward foil 19 may be at least 5.0, whereas an aspect ratio of the aft foil 9 may be approximately 4.0 – 7.0, such as around 5.0. The span (bf) of the forward foil 19 is preferably at most 90% of a vessel's hull width at a longitudinal position of the forward foil 19.

[0051] Figure 6 shows a detailed plan view of the connecting member 13 of a third exemplary embodiment of the vessel 1. The connecting members 13 therein have a

connecting member foil 17 with a chord (cc), a leading edge 20 and a trailing edge 21 relative to the forward direction 12. The connecting member foil 17 has a chord (cc) and profile, with a configuration to provide a lifting force (Lc). More specifically, the connecting member foil 17 is oriented to provide a continuous, sideways, and forward-directed component of the lifting force Lc12 to amplify the forward lift component La12 generated by the aft foil 9. The connecting members 13 may each have a connecting member foil 17 having a streamlined profile with respect to the forward direction 5 with a chord having a chord length of 0.8 to 1.2 times the chord length of the aft foil. Thereto, an angle ψ between the chord (cc) of the connecting member foil 17, and the vertical mirror plane may be around 0 to 10°, such as around 5°.

[0052] Although not explicitly shown in the figures, the forward foil 19 may be connected to the central or forward hull portion in front of the pressure transition region 18 by means of a single or a pair of forward connecting members. The forward connecting members may be defined with respect to the forward foil 19 and/or the central or forward portion 7, 6, and/or the vertical mirror plane 14, and/or the vertical/horizontal, mutatis mutandis, by means of the connecting member-related features as described with respect to the aft foil 9.

[0053] Figure 7 shows a schematic bottom view of a fourth exemplary embodiment of the vessel 1. As shown, at least half the chord of the aft foil 9 may be behind a vertical line through the location where the aft portion 8 of the hull leaves the water. This also holds for the embodiments described in figures 1 to 6. As shown, the connecting members 13 may therein be formed as outriggers 23, spaced substantially apart from a central hull 24. The central hull 24 and the two outriggers 23 are rigidly connected above the waterline, however, for instance forming a single hull. The outriggers 23 are to be spaced at a substantial spanwise distance D1 from the vertical mirror plane 14. The spanwise distance D1 therein is substantially larger than half the hull width of the aft portion/stern 8, such as 1.5 – 2.5 times, for instance 2 times. An additional strut 22 may be arranged at the position of the vertical mirror plane 14 to connect the aft foil 9 to the central hull 24.

[0054] It should be noted that, also with the other embodiments, an additional strut or, in general, an additional (intermediate) connecting member may be added (for instance at the position of the vertical mirror plane) to improve construction strength, for instance in case the aft foil has a relatively large span.

[0055] Figure 8 shows a detailed perspective view of another exemplary embodiment of the aft foil/connecting member arrangement of figure 4. In figure 8, the connecting members 13 are each connected to the aft foil 9 by means of a nacelle 25, preferably at a connection point at a spanwise distance from the mirror plane of 30 to 40% of the span of the aft foil 9. The nacelle 25 is shaped in such a way that, when viewed in the flow direction, a smooth change in cross-sectional area of the combined aft foil/connecting members/nacelle arrangement is provided (as encountered by the flow). To this end, a forward part of the nacelle 25 may have a conical or rounded shape. Preferably, the nacelle has a bullet-like shape. The inventor has found that, in particular when the connecting members 13 have a leading edge sweep, it is important for the forward part of the nacelle 25 to protrude forwards with respect to the leading edge 10 of the aft foil 9 (and the leading edge of the respective connecting member) at the connection point as to obtain a gradual increase in cross-sectional area. By providing the connection point at 30 to 40% of the span of the aft foil 9 an optimal balance is achieved between structural requirements on the one hand and hydrodynamic (drag) considerations on the other hand.

[0056] Thus, the invention has been described by reference to the embodiments discussed above. It will be recognized that these embodiments are susceptible to various modifications and alternative forms well known to those of skill in the art without departing from the spirit and scope of the invention. Accordingly, although specific embodiments have been described, these are examples only and are not limiting upon the scope of the invention.

List of reference numerals

1. Vessel
2. Body of water
3. Non-planing hull
4. Waterline
5. Longitudinal direction
6. Forward portion
7. Central portion
8. Aft portion
9. Aft foil
10. Aft foil leading edge
11. Aft foil trailing edge
12. Forward direction
13. Aft foil connecting member
14. Vertical mirror plane
15. Foil tip
16. Junction region aft foil/connecting member
17. Connecting member foil
18. Pressure transition region
19. Forward foil
20. Leading edge of connecting member foil
21. Trailing edge of connecting member foil
22. Further connecting member/strut
23. Outrigger
24. Central hull
25. Nacelle

La = lift force of aft foil

La12 = forwardly oriented lift force of aft foil

Lc = lift force of connecting member

Lc12 = forward oriented lift force of connecting member

ba = span of aft foil

	bf	=	span of forward foil
	ca	=	chord of aft foil
	cc	=	chord of connecting member
	D1	=	spanwise distance from the mirror plane
	D2	=	distance from hull at position in mirror plane to forward foil
	D3	=	distance of forward foil to hull in spanwise direction
	α	=	tilting angle of aft foil
	β	=	leading edge sweep angle of connecting member
	γ	=	leading edge sweep angle of aft foil
	∂	=	dihedral angle of forward foil
	Φ	=	tilting angle of forward foil
	Ψ	=	angle between the chord of the connecting member foil, and the vertical mirror plane
	Ri	=	inner bend radius

Conclusies

1. Vaartuig (1) voor bedrijf op een watermassa (2), omvattend:

een niet-planerende romp (3) met een waterlijn (4) en een lengterichting (5) met een voorgedeelte (6), een achtergedeelte (8), en een middengedeelte (7), waarbij de romp zo is geconfigureerd dat het achtergedeelte een kleinere waterverplaatsing heeft ten opzichte van een waterverplaatsing bij het middengedeelte; en

een achtervleugel (9) bevestigd aan het rompachtergedeelte met een of meer verbindingsorganen (13) en onder het oppervlak van het water, en op afstand geplaatst van de romp, waarbij de achtervleugel een vleugelbreedte (ba) heeft, een koorde (ca), en een voorrand (10) en een achterrand (11) ten opzichte van een voorwaartse richting (12),

waarbij de voorrand van de achtervleugel is uitgelijnd met de horizontaal of is gekanteld onder een opwaartse of neerwaartse hoek (α) ten opzichte van de horizontaal,

waarbij de achtervleugel een koorde en een profiel heeft in een langsdoorsnede, met een configuratie om een liftkracht (La) te verschaffen, waarbij de kantelhoek van de koorde van de achtervleugel wordt gemeten ten opzichte van de horizontaal,

en waarbij de achtervleugel zodanig is gericht dat een continue, opwaartse, voorwaarts gerichte component (La12) van de liftkracht (La) wordt verschaft.

2. Vaartuig (1) volgens conclusie 1, waarbij de achtervleugel is verbonden met het rompachtergedeelte door middel van een paar verbindingsorganen (13), waarbij de achtervleugel in de breedterichting van de vleugel symmetrisch is ten opzichte van een verticaal spiegelvlak (14), waarbij elk van de verbindingsorganen in verbinding staat met de achtervleugel in een verbindingsgebied (16), op een afstand (D1) in de breedterichting van de vleugel, vanaf het spiegelvlak, van 25 tot 50%, bij voorkeur 30 tot 50%, bij grotere voorkeur 40 tot 50% van de vleugelbreedte van de achtervleugel.

3. Vaartuig (1) volgens conclusie 2, waarbij de achtervleugel vleugeltips (15) heeft en elk van de verbindingsorganen aan een respectieve vleugeltip is gepositioneerd.

4. Vaartuig (1) volgens conclusie 3, waarbij de verbindingsorganen een pijlstandshoek (β) aan de voorrand hebben van 0 tot 40°, bij voorkeur 20 tot 40°, bij grotere voorkeur 30 tot 40°, ten opzichte van de verticaal.

5. Vaartuig (1) volgens conclusie 3 of 4, wanneer afhankelijk van conclusie 3, waarbij elk van de verbindingsorganen een geronde vorm omvat in een dwarsgelegen verticaal vlak om een geleidelijke overgang te verschaffen van de achtervleugel naar de verticaal in het verbindingsgebied (16).

6. Vaartuig (1) volgens conclusie 5, waarbij de geronde vorm in het verbindingsgebied een maximale inwendige buigstraal (Ri) heeft van 1 maal de koordlengte van de achtervleugel en een minimale inwendige buigstraal van 0,5 maal de koordlengte van de achtervleugel.

7. Vaartuig (1) volgens een van de conclusies 2-6, waarbij een pijlstandshoek, in bovenaanzicht, van de voorrand van de achtervleugel 15 tot 25° is, bij grotere voorkeur 5 tot 15° is, bij nog grotere voorkeur 0 tot 5° is.

8. Vaartuig (1) volgens een van de voorgaande conclusies, waarbij ten minste de helft van de koordlengte van de achtervleugel achter een verticale lijn ligt door de locatie waar het achtergedeelte van de romp het water verlaat.

9. Vaartuig (1) volgens een van de conclusies 2-8, waarbij de verbindingsorganen een gestroomlijnde doorsnedevorm (17) hebben ten opzichte van de voorwaartse richting met een koordlengte van 0,8 tot 1,2 maal de koordlengte van de achtervleugel.

10. Vaartuig (1) volgens conclusie 9, waarbij de koordlengte van de verbindingsorganen taps toeloopt van een eerste koordlengte in een verbinding met de romp naar een relatief kleinere tweede koordlengte in de verbinding met de achtervleugel, waarbij de tapsheidsverhouding 0,5 tot 0,9, bij voorkeur 0,5 tot 0,7, bij grotere voorkeur rond 0,5 is.

11. Vaartuig (1) volgens een van de conclusies 2-10, waarbij de koordlengte van de achtervleugel taps toeloopt van een eerste koordlengte in het spiegelvlak naar een relatief kleinere tweede koordlengte aan een vleugeltip, waarbij de tapsheidsverhouding 0,5 tot 1,0, bij voorkeur 0,7 tot 0,9, bij grotere voorkeur rond 0,8 is.

12. Vaartuig (1) volgens een van de voorgaande conclusies, waarbij, tijdens gebruik, in de lengterichting het middengedeelte een drukovergangsgebied (18) laat zien, waarbij de drukkracht op de romp verandert van toenemende weerstand vóór dit gebied, naar afnemende weerstand achter dit gebied, waarbij een voorvleugel (19) is gepositioneerd vóór het drukovergangsgebied.

13. Vaartuig (1) volgens conclusie 12, waarbij de achtervleugel is gepositioneerd achter het drukovergangsgebied.

14. Vaartuig (1) volgens conclusie 12 of 13, waarbij de achter- en voorvleugels zijn geconfigureerd om ten minste 30% tot 90%, bij grotere voorkeur 50 tot 70%, van het ondergedompelde volume van het vaartuig onder de waterlijn te houden.

15. Vaartuig (1) volgens een van de voorgaande conclusies 12-14, waarbij de voorvleugel in de breedterichting van de vleugel symmetrisch is ten opzichte van het verticale spiegelvlak, waarbij de voorvleugel een zodanige tweevlakshoek (∂) heeft, dat de afstand (D3) van de vleugel tot de romp hoofdzakelijk hetzelfde blijft langs de breedte van de vleugel.

16. Vaartuig (1) volgens conclusie 15, waarbij de tweevlakshoek 5 tot 50° is, bij voorkeur 10 tot 30° is, bij grotere voorkeur rond 20° is.

17. Vaartuig (1) volgens een van de conclusies 12-16, waarbij een slankheidsverhouding van de voorvleugel ten minste 4,0, bij voorkeur groter dan 5,0 is.

18. Vaartuig (1) volgens een van de conclusies 12-17, waarbij een slankheidsverhouding van de achtervleugel ongeveer 4,0 tot 7,0 is, bij voorkeur groter dan 5,0 is.

19. Vaartuig (1) volgens een van de voorgaande conclusies 12-18, waarbij de vleugelbreedte van zowel de voorvleugel als de achtervleugel ten hoogste 90% van de breedte van de vaartuigromp op de lengtepositie van de betreffende vleugel is.

20. Vaartuig (1) volgens een van de conclusies 12-19, waarbij de voorvleugel is gekanteld onder een kantelhoek (φ), met de voorrand 0 tot 10° opwaarts ten opzichte van de horizontaal.

21. Vaartuig (1) volgens een van de conclusies 2-20, waarbij de verbindingsorganen een verbindingsorgaanvleugel (17) omvatten met een koorde (cc) en een voorrand (20) en een achterrand (21) ten opzichte van een voorwaartse richting,

waarbij de verbindingsorgaanvleugel een koorde en een profiel in langsdoorsnede heeft, met een configuratie om een liftkracht (Lc) te verschaffen,

en waarbij het verbindingsorgaanprofiel zodanig is gericht, dat een continue, zijwaarts en voorwaarts gerichte component van de liftkracht (Lc12) wordt verschaft om de voorwaarts gerichte component (La12) gegenereerd door de achtervleugel te versterken.

22. Vaartuig (1) volgens conclusie 21, waarbij een hoek (ψ) tussen de koorde van de verbindingsorgaanvleugel en het verticale spiegelvlak tussen de 0 tot 10° is, zoals rond 5° in het geval van de achtervleugel, en tussen 0 tot -10° is, zoals rond -5°, in het geval van de voorvleugel.

23. Vaartuig (1) volgens een van de voorgaande conclusies, waarbij, wanneer niet afhankelijk van conclusie 5 of 6, elk van de verbindingsorganen (13) is verbonden met de achtervleugel door middel van een nacelle (25), bij voorkeur in een verbindingspunt op een afstand vanaf het spiegelvlak, in de breedterichting van de vleugel, van 30 tot 40% van de vleugelbreedte van de achtervleugel.

24. Vaartuig (1) volgens een van de conclusies 12-23, waarbij de voorvleugel is verbonden met het midden- of achterrompgedeelte vóór het drukovergangsgebied door middel van een of meer voorverbindingsorganen, waarbij de voorverbindingsorganen

zijn gedefinieerd ten opzichte van de voorvleugel en/of het midden- of voorgedeelte, mutatis mutandis, door de verbindingsorgaan-gerelateerde kenmerken zoals te vinden in een van de conclusies 2-6 en 9-11.

Fig 1

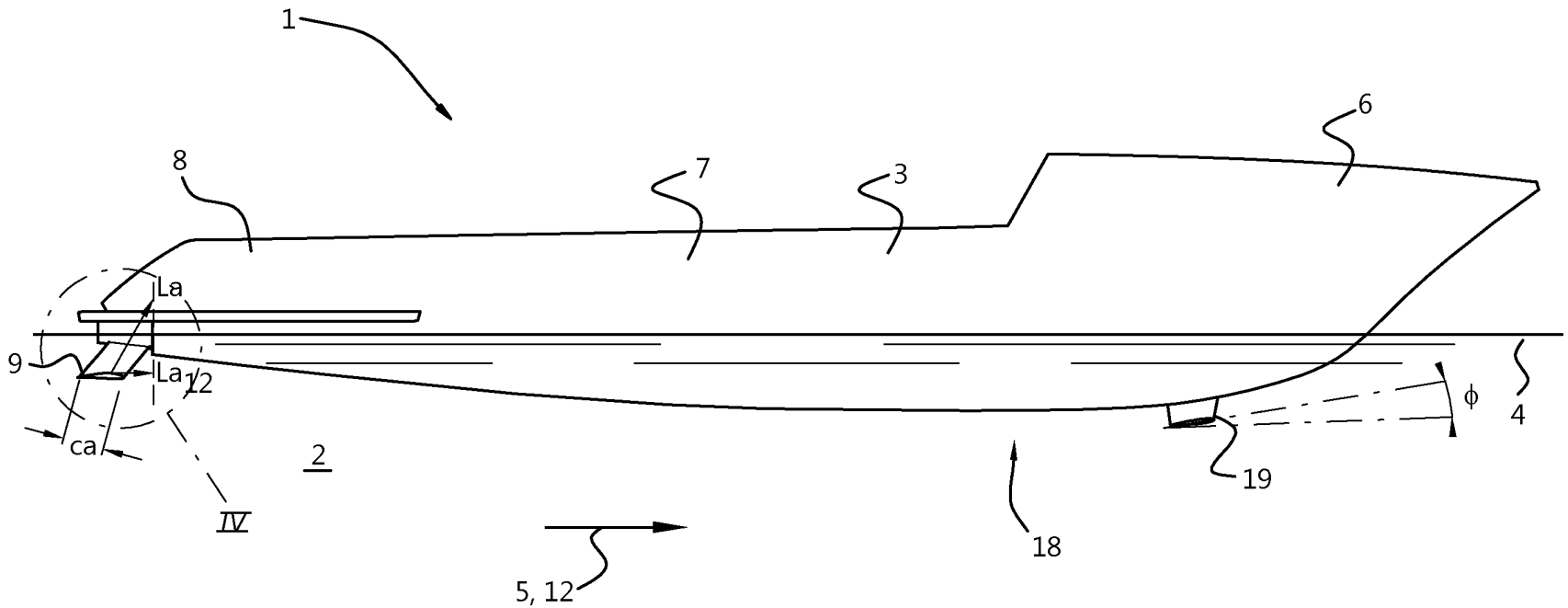

Fig 2

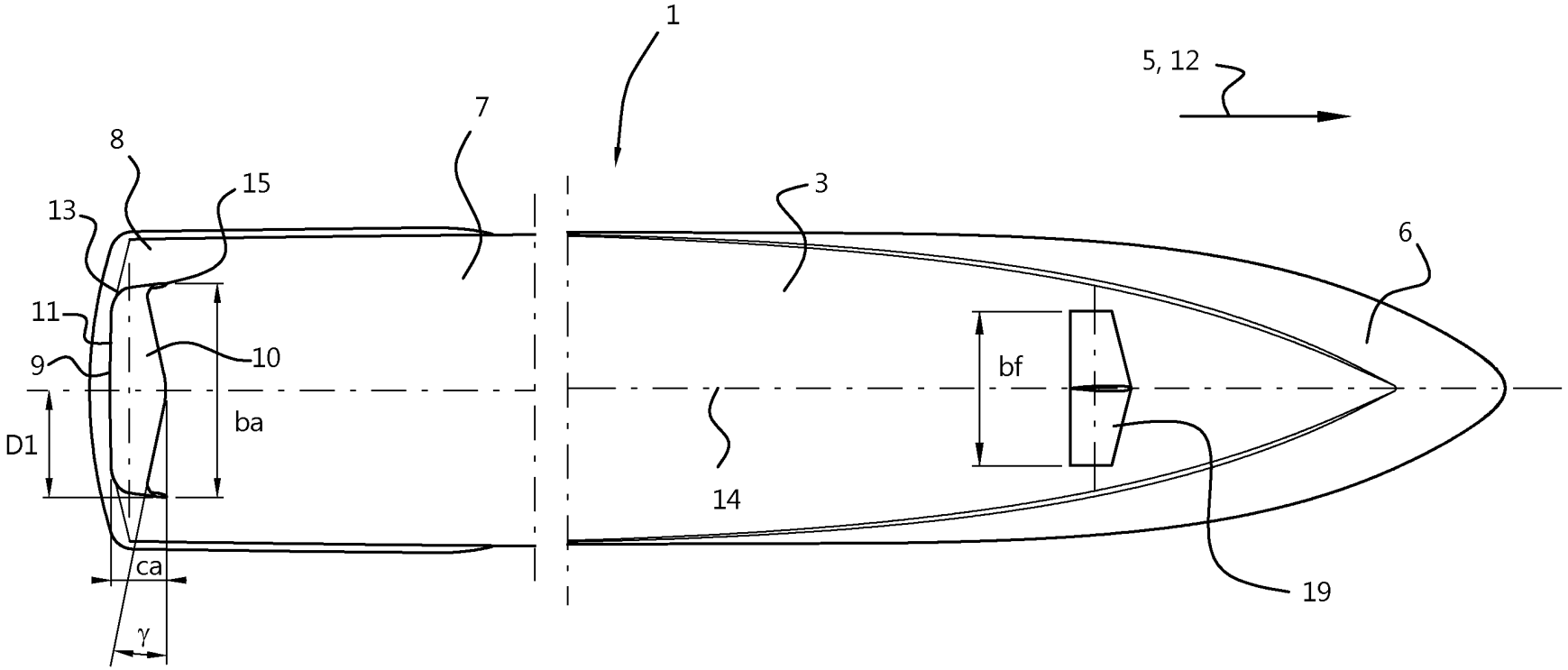

Fig 3

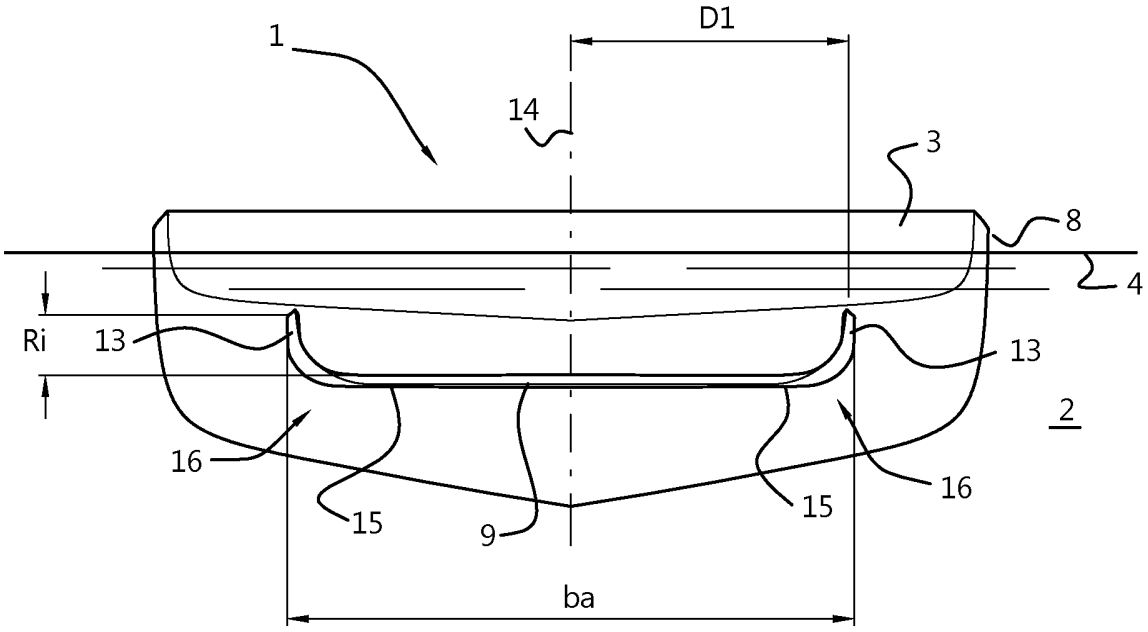

Fig 4

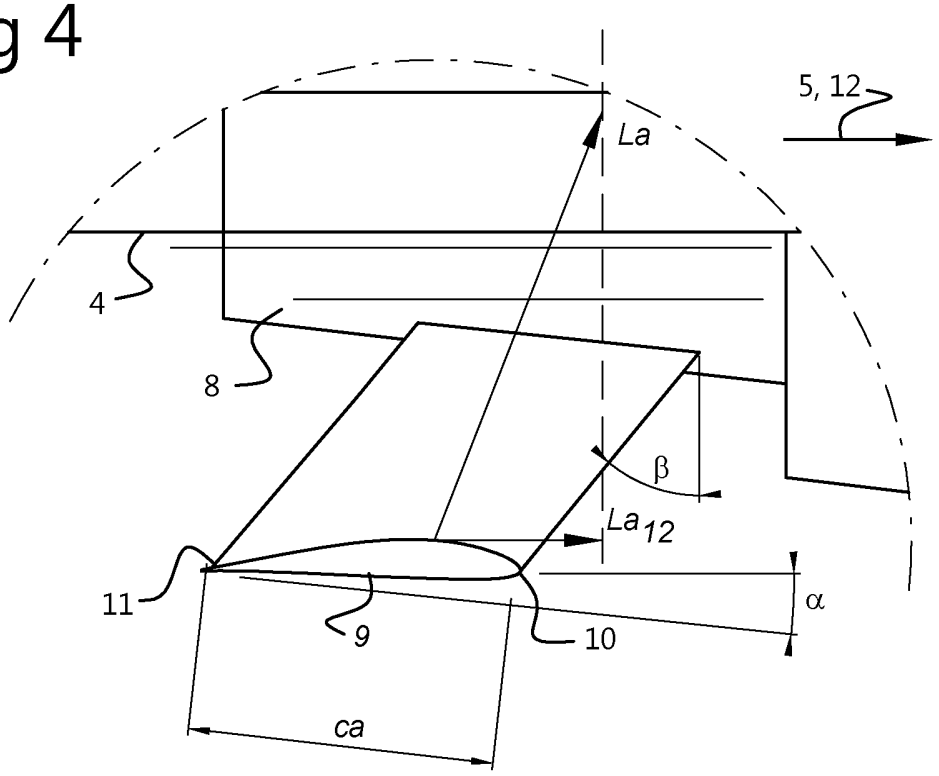

Fig 5

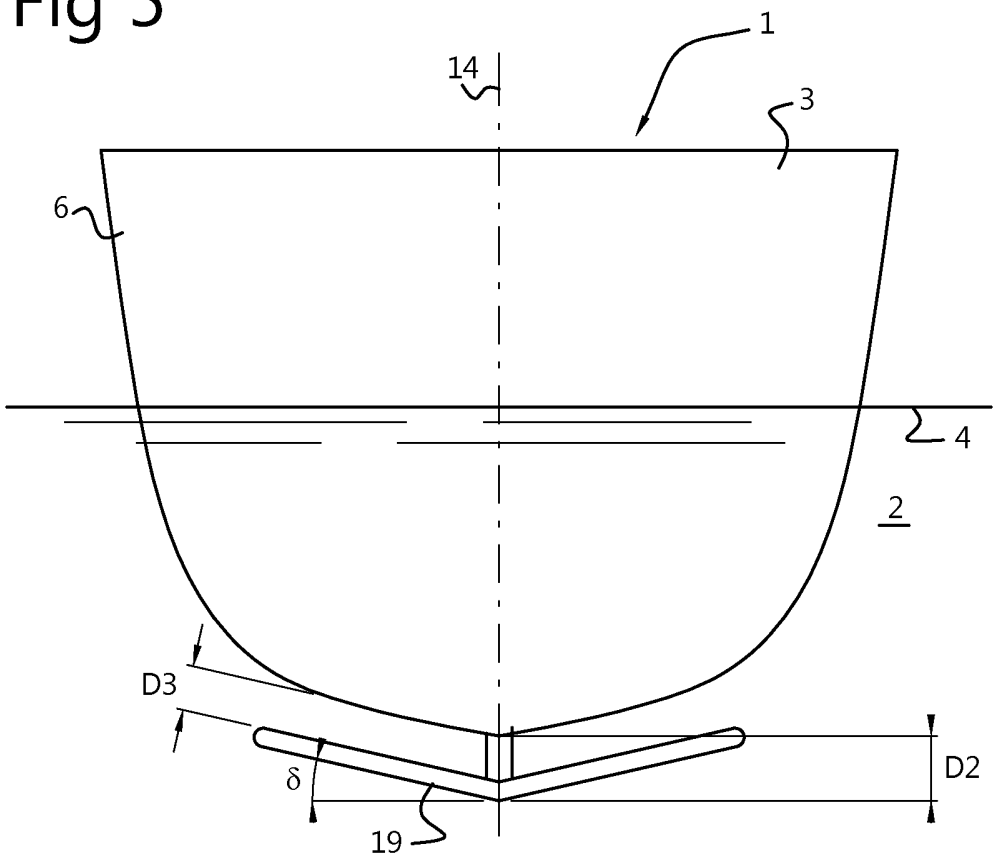

Fig 6

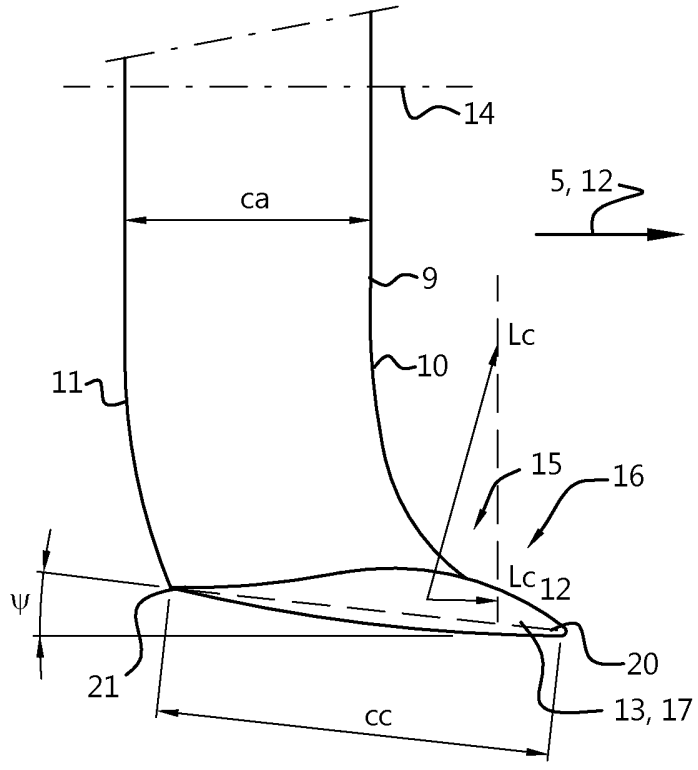

Fig 7

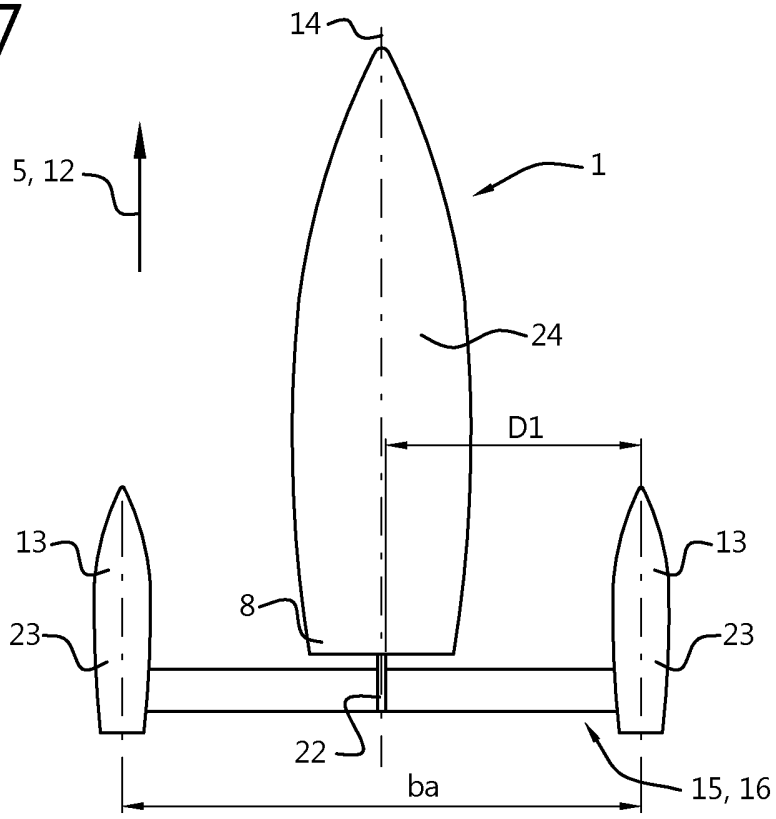

Fig 8

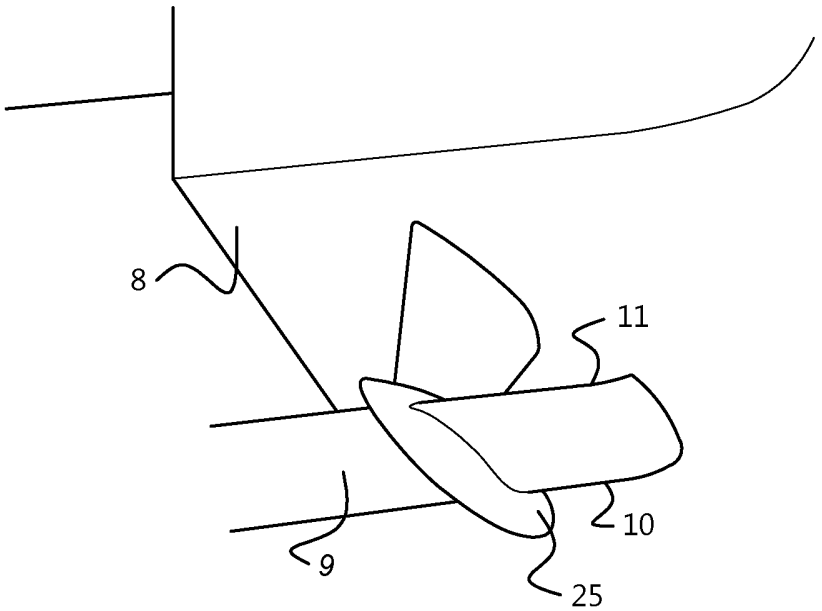

ABSTRACT

The invention relates to a vessel for operating on a body of water comprising: a non-planing hull having a waterline and a longitudinal direction with a forward portion, an aft portion, and a central portion, the hull being configured to have the aft portion with a smaller water displacement relative to a water displacement at the central portion; and an aft foil affixed to the aft hull portion with one or more connecting members, and below the surface of the water, and spaced from the hull, the aft foil having a span, a chord, and a leading edge and a trailing edge relative to a forward direction, wherein the leading edge of the aft foil is tilted at a downward angle relative to the horizontal, wherein the aft foil has a chord and profile in longitudinal cross section, with a configuration to provide a lifting force, the tilt angle of the chord of the aft foil being measured with respect to the horizontal, and wherein the aft foil is oriented to provide a continuous, upward, forwardly directed component of the lifting force.

Agentschap NL
Ministerie van Economische Zaken

OCTROOIAANVRAAG NR.:
NO 139169
NL 2013178

ONDERZOEKSRAPPORT

BETREFFENDE HET RESULTAAT VAN HET ONDERZOEK NAAR DE STAND VAN DE TECHNIEK

RELEVANTE LITERATUUR

Categorie[1]	Literatuur met, voor zover nodig, aanduiding van speciaal van belang zijnde tekstgedeelten of figuren.	Van belang voor conclusie(s) nr:	Classificatie (IPC)
X Y	US 2007/017428 A1 (VAN OOSSANEN PIETER [NL]) 25 januari 2007 (2007-01-25) * alinea [0057] - alinea [0060]; figuren * -----	1-11, 21-24 12-20	INV. B63B1/08 B63B1/04 B63B1/24
Y	EP 0 290 170 A2 (STANFORD ULF HARRY [US]; HORTON CORWIN R [US]) 9 november 1988 (1988-11-09) * bladzijde 11, regel 43 - regel 53 * * bladzijde 14, regel 4 - regel 16; figuren * -----	12-20	B63B1/40 B63B39/06 B63B39/00 B63B1/36 B63B1/06
Y	Eirik Bøckmann ET AL: "The Effect of a Fixed Foil on Ship Propulsion and Motions", Third International Symposium on Marine Propulsors smp'13, 31 mei 2013 (2013-05-31), XP055175351, Gevonden op het Internet: URL:http://202.114.89.60/resource/pdf/6373.pdf [gevonden op 2015-03-10] * het gehele document * -----	12-14,18	Onderzochte gebieden van de techniek B63B
X	WO 2004/020276 A1 (OOSSANEN & ASSOCIATES B V VAN [NL]; VAN OOSSANEN PIETER [NL]) 11 maart 2004 (2004-03-11) * figuren * -----	1-7,9-11	
	-/--		

Indien gewijzigde conclusies zijn ingediend, heeft dit rapport betrekking op de conclusies ingediend op:

Plaats van onderzoek:	Datum waarop het onderzoek werd voltooid:	Bevoegd ambtenaar:
's-Gravenhage	11 maart 2015	Schmitter, Thierry

[1] CATEGORIE VAN DE VERMELDE LITERATUUR

- X: de conclusie wordt als niet nieuw of niet inventief beschouwd ten opzichte van deze literatuur
- Y: de conclusie wordt als niet inventief beschouwd ten opzichte van de combinatie van deze literatuur met andere geciteerde literatuur van dezelfde categorie, waarbij de combinatie voor de vakman voor de hand liggend wordt geacht
- A: niet tot de categorie X of Y behorende literatuur die de stand van de techniek beschrijft
- O: niet-schriftelijke stand van de techniek
- P: tussen de voorrangsdatum en de indieningsdatum gepubliceerde literatuur
- T: na de indieningsdatum of de voorrangsdatum gepubliceerde literatuur die niet bezwarend is voor de octrooiaanvrage, maar wordt vermeld ter verheldering van de theorie of het principe dat ten grondslag ligt aan de uitvinding
- E: eerdere octrooi(aanvrage), gepubliceerd op of na de indieningsdatum, waarin dezelfde uitvinding wordt beschreven
- D: in de octrooiaanvrage vermeld
- L: om andere redenen vermelde literatuur
- &: lid van dezelfde octrooifamilie of overeenkomstige octrooipublicatie

RELEVANTE LITERATUUR

Categorie[1]	Literatuur met, voor zover nodig, aanduiding van speciaal van belang zijnde tekstgedeelten of figuren.	Van belang voor conclusie(s) nr:
X	Hans Heynen: "Hull Vane bespaart tot 24% brandstof - Techniek", Schuttevaer, 7 juli 2012 (2012-07-07), XP055175391, Gevonden op het Internet: URL:http://accschuttevaer.e-activesites.nl/nieuws/techniek/nid17884-hull-vane-bespaart-tot-24-brandstof.html [gevonden op 2015-03-10] * het gehele document *	1-11,15, 16,21-24
A	WO 96/26104 A1 (PETROMANOLAKIS E EMMANUEL [GR]) 29 augustus 1996 (1996-08-29) * bladzijde 12, regel 19 - bladzijde 13, regel 10; figuren *	12-20
A	FR 699 943 A (HENRI LECOQ) 21 februari 1931 (1931-02-21) * het gehele document *	12-20

[1] CATEGORIE VAN DE VERMELDE LITERATUUR

X: de conclusie wordt als niet nieuw of niet inventief beschouwd ten opzichte van deze literatuur
Y: de conclusie wordt als niet inventief beschouwd ten opzichte van de combinatie van deze literatuur met andere geciteerde literatuur van dezelfde categorie, waarbij de combinatie voor de vakman voor de hand liggend wordt geacht
A: niet tot de categorie X of Y behorende literatuur die de stand van de techniek beschrijft
O: niet-schriftelijke stand van de techniek
P: tussen de voorrangsdatum en de indieningsdatum gepubliceerde literatuur
T: na de indieningsdatum of de voorrangsdatum gepubliceerde literatuur die niet bezwarend is voor de octrooiaanvrage, maar wordt vermeld ter verheldering van de theorie of het principe dat ten grondslag ligt aan de uitvinding
E: eerdere octrooi(aanvrage), gepubliceerd op of na de indieningsdatum, waarin dezelfde uitvinding wordt beschreven
D: in de octrooiaanvrage vermeld
L: om andere redenen vermelde literatuur
&: lid van dezelfde octrooifamilie of overeenkomstige octrooipublicatie

AANHANGSEL BEHORENDE BIJ HET RAPPORT BETREFFENDE HET ONDERZOEK NAAR DE STAND VAN DE TECHNIEK, UITGEVOERD IN DE OCTROOIAANVRAGE NR.

NO 139169
NL 2013178

Het aanhangsel bevat een opgave van elders gepubliceerde octrooiaanvragen of octrooien (zogenaamde leden van dezelfde octrooifamilie), die overeenkomen met octrooischriften genoemd in het rapport.
De opgave is samengesteld aan de hand van gegevens uit het computerbestand van het Europees Octrooibureau per
De juistheid en volledigheid van deze opgave wordt noch door het Europees Octrooibureau, noch door het Bureau voor de Industriële eigendom gegarandeerd; de gegevens worden verstrekt voor informatiedoeleinden.

11-03-2015

In het rapport genoemd octrooigeschrift		Datum van publicatie	Overeenkomend(e) geschrift(en)		Datum van publicatie
US 2007017428	A1	25-01-2007	GEEN		
EP 0290170	A2	09-11-1988	AU	621822 B2	26-03-1992
			AU	640570 B2	26-08-1993
			AU	1795988 A	02-12-1988
			AU	1801992 A	30-07-1992
			DE	3886256 D1	27-01-1994
			DE	3886256 T2	07-07-1994
			EP	0290170 A2	09-11-1988
			ES	2049248 T3	16-04-1994
			FI	886007 A	28-12-1988
			JP	H01503133 A	26-10-1989
			SG	154194 G	17-03-1995
			WO	8808386 A1	03-11-1988
WO 2004020276	A1	11-03-2004	AT	409639 T	15-10-2008
			AU	2003263659 A1	19-03-2004
			DK	1545968 T3	09-02-2009
			EP	1545968 A1	29-06-2005
			ES	2315561 T3	01-04-2009
			JP	2005537175 A	08-12-2005
			KR	20050083655 A	26-08-2005
			NL	1021346 C2	10-03-2004
			US	2006124044 A1	15-06-2006
			WO	2004020276 A1	11-03-2004
WO 9626104	A1	29-08-1996	AU	4673396 A	11-09-1996
			CN	1148834 A	30-04-1997
			DE	69632507 D1	24-06-2004
			DE	69632507 T2	02-06-2005
			EP	0756554 A1	05-02-1997
			ES	2221933 T3	16-01-2005
			GR	95100067 A	31-10-1996
			JP	3790270 B2	28-06-2006
			JP	H09512227 A	09-12-1997
			PT	756554 E	30-09-2004
			RU	2152326 C1	10-07-2000
			WO	9626104 A1	29-08-1996
FR 699943	A	21-02-1931			

EPO FORM P0466

SCHRIFTELIJKE OPINIE

DOSSIER NUMMER	INDIENINGSDATUM	VOORRANGSDATUM	AANVRAAGNUMMER
NO139169	14.07.2014		NL2013178

CLASSIFICATIE
INV. B63B1/08 B63B1/04 B63B1/24 B63B1/40 B63B39/06 B63B39/00 B63B1/36 B63B1/06

AANVRAGER
Van Oossanen & Associates B.V.

Deze schriftelijke opinie bevat een toelichting op de volgende onderdelen:

- ☒ Onderdeel I Basis van de schriftelijke opinie
- ☐ Onderdeel II Voorrang
- ☐ Onderdeel III Vaststelling nieuwheid, inventiviteit en industriële toepasbaarheid niet mogelijk
- ☐ Onderdeel IV De aanvraag heeft betrekking op meer dan één uitvinding
- ☒ Onderdeel V Gemotiveerde verklaring ten aanzien van nieuwheid, inventiviteit en industriële toepasbaarheid
- ☐ Onderdeel VI Andere geciteerde documenten
- ☐ Onderdeel VII Overige gebreken
- ☒ Onderdeel VIII Overige opmerkingen

	DE BEVOEGDE AMBTENAAR

Aanvraag nr.:

SCHRIFTELIJKE OPINIE

NL2013178

Onderdeel I Basis van de Schriftelijke Opinie

1. Deze schriftelijke opinie is opgesteld op basis van de meest recente conclusies ingediend voor aanvang van het onderzoek.

2. Met betrekking tot **nucleotide en/of aminozuur sequenties** die genoemd worden in de aanvraag en relevant zijn voor de uitvinding zoals beschreven in de conclusies, is dit onderzoek gedaan op basis van:

   a. type materiaal:

   ☐ sequentie opsomming

   ☐ tabel met betrekking tot de sequentie lijst

   b. vorm van het materiaal:

   ☐ op papier

   ☐ in elektronische vorm

   c. moment van indiening/aanlevering:

   ☐ opgenomen in de aanvraag zoals ingediend

   ☐ samen met de aanvraag elektronisch ingediend

   ☐ later aangeleverd voor het onderzoek

3. ☐ In geval er meer dan één versie of kopie van een sequentie opsomming of tabel met betrekking op een sequentie is ingediend of aangeleverd, zijn de benodigde verklaringen ingediend dat de informatie in de latere of additionele kopieën identiek is aan de aanvraag zoals ingediend of niet meer informatie bevatten dan de aanvraag zoals oorspronkelijk werd ingediend.

4. Overige opmerkingen:

Aanvraag nr.:

SCHRIFTELIJKE OPINIE

NL2013178

Onderdeel V Gemotiveerde verklaring ten aanzien van nieuwheid, inventiviteit en industriële toepasbaarheid

1. Verklaring

Nieuwheid	Ja:	Conclusies 3-7, 10-24
	Nee:	Conclusies 1, 2, 8, 9
Inventiviteit	Ja:	Conclusies
	Nee:	Conclusies 1-24
Industriële toepasbaarheid	Ja:	Conclusies 1-24
	Nee:	Conclusies

2. Citaties en toelichting:

Zie aparte bladzijde

Onderdeel VIII Overige opmerkingen

De volgende opmerkingen met betrekking tot de duidelijkheid van de conclusies, beschrijving, en figuren, of met betrekking tot de vraag of de conclusies nawerkbaar zijn, worden gemaakt:

Zie aparte bladzijde

Re Item V

Reasoned statement with regard to novelty, inventive step or industrial applicability; citations and explanations supporting such statement

Reference is made to the following documents:

D1 US 2007/017428 A1 (VAN OOSSANEN PIETER [NL]) 25 januari 2007 (2007-01-25)

D2 EP 0 290 170 A2 (STANFORD ULF HARRY [US]; HORTON CORWIN R [US]) 9 november 1988 (1988-11-09)

D3 Eirik Bøckmann ET AL: "The Effect of a Fixed Foil on Ship Propulsion and Motions",
Third International Symposium on Marine Propulsors smp'13, 31 mei 2013 (2013-05-31), XP055175351,
Gevonden op het Internet:
URL:http://202.114.89.60/resource/pdf/6373.pdf
[gevonden op 2015-03-10]

D4 WO 2004/020276 A1 (OOSSANEN & ASSOCIATES B V VAN [NL]; VAN OOSSANEN PIETER [NL]) 11 maart 2004 (2004-03-11)

D5 Hans Heynen: "Hull Vane bespaart tot 24% brandstof - Techniek",
Schuttevaer, 7 juli 2012 (2012-07-07), XP055175391,
Gevonden op het Internet:
URL:http://accschuttevaer.e-activesites.nl/nieuws/techniek/nid17884-hull-vane-bespaart-tot-24-brandstof.html
[gevonden op 2015-03-10]

D6 WO 96/26104 A1 (PETROMANOLAKIS E EMMANUEL [GR]) 29 augustus 1996 (1996-08-29)

D7 FR 699 943 A 21 februari 1931 (1931-02-21)

The present application does not meet the criteria of patentability, because the subject-matter of claim 1 is not new.

D1 discloses a vessel for operating on a body of water comprising:

- a non-planing hull (2) having a waterline (8) and a longitudinal direction with a forward portion (4), an aft portion (9), and a central portion (3), the hull being configured to have the aft portion with a smaller water displacement relative to a water displacement at the central portion; and

- an aft foil (17) affixed to the aft hull portion with one or more connecting members (26), and below the surface of the water, and spaced from the hull, the aft foil (17) having a span, a chord, and a leading edge and a trailing edge relative to a forward direction,

- wherein the leading edge of the aft foil is aligned with the horizontal or tilted at an upward or downward angle relative to the horizontal,

- wherein the aft foil has a chord and profile in longitudinal cross section, with a configuration to provide a lifting force, the tilt angle of the chord of the aft foil being measured with respect to the horizontal,

- and wherein the aft foil is oriented to provide a continuous, forward-directed component of the lift force (see figures).

Dependent claims 2-24 do not contain any features which, in combination with the features of any claim to which they refer, meet the requirements of novelty and/or inventive step, see documents D1 to D7 and the references applying to these documents cited in the search report.

Especially the subject matter of dependent claims whereby the connecting members of the foils are "hydrodynamically" shaped and/or swept back to create an extra lift and/or thrust are merely one of several straightforward possibilities from which the skilled person would select, in accordance with circumstances, without the exercise of inventive skill, in order to solve the problem posed.

Also the subject matter of claim 15 and 16 whereby the distance between the forward foil and the hull is kept constant has already been disclosed by D1 for the aft foil, see figures.

It is also considered that there are two inventions covered by the claims indicated as follows:

Claim 1-11, 21-24

Non planning hull fitted with an aft foil, so called "hull vane" to reduce wave resistance, trim resistance and create extra thrust force.

Claim 12-20

Non planning hull fitted with a forward foil to reduce pressure resistance component of the total resistance.

The reasons for which the inventions are not so linked as to form a single general inventive concept, are as follows:

As explained by the applicant in paragraph [0017] of the application, the forward foil has a totally different purpose than the aft "hull vane" foil.

The purpose of the aft foil is already extensively disclosed and explained by the prior art found (D1, D4) and by the literature available on Internet, i.e. D5. The so called "pressure reflection" phenomenon created by the hull vane has a negative effect on the pressure resistance component of the hull in the aft region

The purpose of the forward foil, as understood by the examiner from the disclosure of the present application is, as positioned in front of the transition region (region where boundary layer goes from laminar to turbulent?) to increase the surface where the flow (boundary layer) is laminar. In other words, the forward foil increases "laminarisation" of flow in the fore aft part of the vessel and/or reduces "pressure resistance" in the fore aft region of the hull. The so called "pressure reflection" phenomenon created by the forward foil has a positive effect on the pressure resistance of the hull in the fore aft region.

D2, D6 and D7 disclose the use of appendage (foil, plates) in the fore aft region of the vessel to increase "laminarisation" of the flow and thus reducing the pressure resistance component of the vessel.

No synergetic effect in using an aft foil , i.e. "hull vane" in combination with a forward foil as defined in the claims can be deducted from the present application. Therefore the "hull vane" and the forward foil are two different inventions not linked by a common general inventive concept.

Re Item VIII

Typing mistakes or unclarity in the application have been found:

- description par [0017], line 12: the term " high" should be "low"
- description par [0017], line 14: the term " low" should be "high"
- Claim 20: angle of attack of forward foil: 10 deg. wrt horizontal. No support can be found in the description.
- In claims 23 and 24 expressions "wanneer niet afhankelijk van conclusie 5 or 6" or "mutatis mutansis" are vague and leaves the reader in doubt as to the meaning of the technical feature to which it refers, thereby rendering the definition of the subject-matter of said claim unclear.

Conclusion

Therefore, it is not at present apparent which part of the application could serve as a basis for a new, allowable claim. Should the applicant nevertheless regard some particular matter as patentable, a set of claims should be filed taking account of the following remarks:

-The applicant should indicate in his letter how the subject-matter of the new claim differs from the state of the art and the significance thereof and expose the argumentation about the inventive step in term of problem-solution approach.

-The state of the art document should be identified in the description.

-Independent claims are not in the two-part form, which in the present case would be appropriate, with those features known in combination from the prior art being placed in the preamble and the remaining features being included in the characterising part.