(12) INTERNATIONAL APPLICATION PUBLISHED UNDER THE PATENT COOPERATION TREATY (PCT)

(19) World Intellectual Property Organization
International Bureau

(43) International Publication Date
16 February 2012 (16.02.2012)

PCT

(10) International Publication Number
WO 2012/020244 A2

(51) International Patent Classification:
A47K 3/30 (2006.01)

(21) International Application Number:
PCT/GB2011/051479

(22) International Filing Date:
4 August 2011 (04.08.2011)

(25) Filing Language: English

(26) Publication Language: English

(30) Priority Data:
1013487.2 11 August 2010 (11.08.2010) GB

(71) Applicant *(for all designated States except US)*: **JACUZZI UK GROUP PLC** [GB/GB]; PO Box 572, Woodlands, 21 Roydsdale Way, Euroway Trading Estate, Bradford BD4 6YT (GB).

(72) Inventor; and

(75) Inventor/Applicant *(for US only)*: **WILLIAMS, Paul** [GB/GB]; c/o Jacuzzi UK Group Plc, PO Box 572, Woodlands, 21 Roydsale Way, Euroway Trading Estate, Bradford BD4 6YT (GB).

(74) Agent: **BAILEY WALSH & CO LLP**; 5 York Place, Leeds, Yorkshire LS1 2SD (GB).

(81) Designated States *(unless otherwise indicated, for every kind of national protection available)*: AE, AG, AL, AM, AO, AT, AU, AZ, BA, BB, BG, BH, BR, BW, BY, BZ, CA, CH, CL, CN, CO, CR, CU, CZ, DE, DK, DM, DO, DZ, EC, EE, EG, ES, FI, GB, GD, GE, GH, GM, GT, HN, HR, HU, ID, IL, IN, IS, JP, KE, KG, KM, KN, KP, KR, KZ, LA, LC, LK, LR, LS, LT, LU, LY, MA, MD, ME, MG, MK, MN, MW, MX, MY, MZ, NA, NG, NI, NO, NZ, OM, PE, PG, PH, PL, PT, QA, RO, RS, RU, SC, SD, SE, SG, SK, SL, SM, ST, SV, SY, TH, TJ, TM, TN, TR, TT, TZ, UA, UG, US, UZ, VC, VN, ZA, ZM, ZW.

(84) Designated States *(unless otherwise indicated, for every kind of regional protection available)*: ARIPO (BW, GH, GM, KE, LR, LS, MW, MZ, NA, SD, SL, SZ, TZ, UG, ZM, ZW), Eurasian (AM, AZ, BY, KG, KZ, MD, RU, TJ, TM), European (AL, AT, BE, BG, CH, CY, CZ, DE, DK, EE, ES, FI, FR, GB, GR, HR, HU, IE, IS, IT, LT, LU, LV, MC, MK, MT, NL, NO, PL, PT, RO, RS, SE, SI, SK, SM, TR), OAPI (BF, BJ, CF, CG, CI, CM, GA, GN, GQ, GW, ML, MR, NE, SN, TD, TG).

Published:

— *without international search report and to be republished upon receipt of that report (Rule 48.2(g))*

(54) Title: SCREEN ASSEMBLY

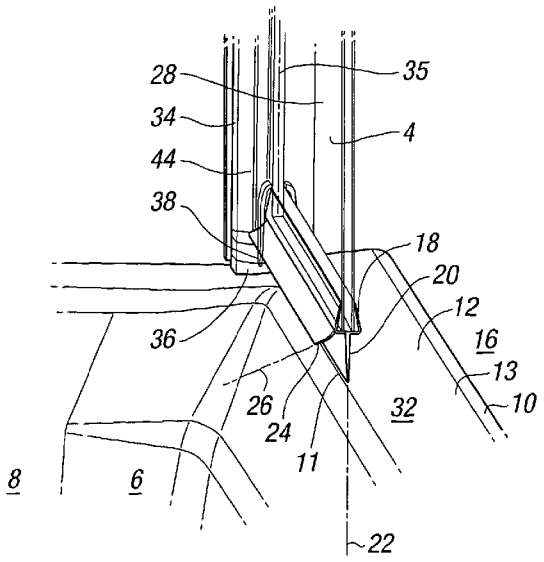

FIG. 2a

(57) Abstract: The invention relates to the provision of a screen assembly including a screen and a water collecting area such as a bath or shower tray. The screen is provided to be fitted in conjunction with the water collecting area in order to prevent or minimise water leaving the area defined by the water collecting area and the screen. The screen is provided with a lower free edge which may be formed by a member having one or more flaps and the top face of a wall or rim of the water collecting area is angled so as to encourage water to flow towards the water collecting area.

WO 2012/020244 A2

Screen Assembly

The invention to which this application relates is a screen assembly of a type which is particularly, although note necessarily exclusively, for use in conjunction with a bath and, yet further in conjunction with the rim at the top of a wall of a bath. However, it should be noted that although reference is made hereon in to use of the screen with a bath the invention may be of use to advantage in combination with an alternative form of water collecting area such as a shower tray, wet room floor or other water collecting area.

The use of shower screens in combination with baths is well known and particularly is known to be used in order to prevent water emitted from a shower head located over the bath, and typically at the end thereof, to splash outwardly of the bath and into the remainder of the bathroom. The screen is also typically provided so as to minimise water splashing off the body of the person when showering. Although the use of the screen is successful in returning the majority of the water into the bath there is commonly a problem experienced with leakages at the interface between the underside of the screen and the top of the bath rim. This is typically attempted to be solved by the provision of a flexible strip of material which is attached to the underside of the screen and which extends downwardly towards the bath. However, after time, the flexible strip tends to become less flexible and fixed in position such that this effect is minimised.

The aim of the present invention is to provide a shower screen assembly which can be used in conjunction with a bath or other water collecting area such as a shower tray, and which assembly is formed so as to prevent or minimise the possibility of leakage of water from the shower to an area external to the bath.

In a first aspect of the invention there is provided a screen assembly for use with a water collecting area, said assembly including a screen, said screen having a lower free edge depending downwardly from the screen towards a top surface of a wall of the water collecting area and wherein a gap is defined between the said free edge of the screen and said top surface and at least the portion of said top surface underlying the screen is provided at an angle such as to allow water located on the top surface to the side of the screen opposing that on which the water collecting area is located, to flow through the gap towards and into the water collecting area.

In one embodiment the said free end of the screen is formed by a member attached to the screen and which includes a first flap depending downwardly from the screen in a first axis and a second flap depending from the screen in an axis angularly disposed with respect to said first axis and the free edge of the first flap defines the gap with the top surface of the water collecting area. In one embodiment the said second flap depends at an angle towards the bath area with which the screen is fitted so as to encourage water which impacts onto the screen to be encouraged to flow back into the water collecting area from the screen.

Typically, the first flap depends downwardly to lie adjacent to the top surface of a wall of the water collecting area in conjunction with which the screen is fitted.

In one embodiment at least a portion of the top surface of the wall is angled such that the edge of the portion which lies furthest from the bath cavity is higher than the edge of the portion which lies closest to the bath cavity.

In one embodiment the angle of the top surface is such as to encourage water which may collect on the same to flow towards the water collecting area. In one embodiment the angle of the top surface is in the range of 2-9 degrees from horizontal, in a preferred embodiment the angle of the top surface is in the range of 4-7 degrees to horizontal.

Thus when the screen is located at the desired position with respect to the portion of the top surface of the wall of the water collecting area, there is provided a gap between the underside of the screen member and the said top surface portion so as to allow any water flowing towards the bath cavity to flow through the gap.

In a further embodiment of the invention there are provided mounting means for locating the screen with at least one support surface and the mounting means include a bracket for securing the screen to the water collecting area so as to allow pivotal movement of the screen wherein said bracket has, or is connected to a mounting member which has, an underside contact face shaped to match the angled top surface of the wall of the water collecting area to which the bracket is to be fitted.

In one embodiment the mounting means include one or more rising hinges such that the vertical as well as pivotal movement of the screen is controlled. The provision of the shaped underside contact face ensures that the screen is positioned correctly with the sealing member in the correct location with respect to the bath. Typically the extent of vertical movement is sufficient to allow the lower free edge of the screen to be moved past the highest point of the said portion of the top surface of the wall of the water collecting area.

Typically the bracket is shaped so as to allow the screen to be located in a substantially vertical plane at least when positioned above the said portion of the top surface of the wall and be pivotably movable about a substantially vertical axis, which axis is typically at one edge of the screen and on or adjacent to a wall to which the screen is fixed.

In a further aspect of the invention there is provided a screen assembly for use in conjunction with a water collecting area, said assembly comprising a screen, a member located on the screen and depending downwardly towards a top surface of a wall of the water collecting area, said top surface angled at least at the portion underlying the screen downwardly towards the water collecting area and wherein said screen is mounted with respect to at least one support means via mounting means which include at least one bracket, said bracket including, or mounted in conjunction with a mounting member which has, a contact face which is provided at an angle to match that of the top surface of the wall to which it is attached such that the screen, at least when positioned above the said wall, lies in a substantially vertical plane.

In one embodiment said water collecting area is a bath with a wall with a top surface adjacent to which said sealing member can be positioned, and the said top surface is angled so as to encourage water collected thereon to flow into the bath cavity. In one embodiment said screen is located with respect to the water collecting area via mounting means located on the top surface and shaped so as to allow pivotal movement of the screen with respect to the top surface about a substantially vertical axis.

In a yet further aspect of the invention there is provided a bath, said bath including a water collecting area defined by a surrounding wall and wherein at least a portion of the top face

of the wall is provided at an angle downwardly towards the water collecting area of between 2-9 degrees from horizontal to encourage water to flow off the same and into the water collecting area.

There is therefore provided in accordance with the invention a screen assembly, including a screen fitted to be pivotably movable with respect to a water collecting area, and the top surface of a portion of the wall of the water collecting which lies in proximity to the screen, is angled so as to encourage water to flow from the top face back into the water collecting area.

Specific embodiments of the invention are now described with reference to the accompanying drawings wherein;

Figure 1 illustrates one example of a screen assembly in accordance with the invention in use with a water collecting area in the form of a bath;

Figure 2a and b illustrates a portion of the arrangement of figure 1 in accordance with the invention from the side and in elevation respectively;

Figure 3 illustrates the angled top surface of a portion of the wall of the bath of figure 1;

Figure 4 illustrates a mounting means bracket according to one embodiment of the invention in position on the top surface of the wall shown in Figure 3; and

Figures 5a-d illustrate a mounting member for use with the bracket shown in Figure 4.

Referring firstly to figure 1 there is illustrated a screen assembly 2 in accordance with the invention which comprises a screen, typically of glass, 4. The screen is located in conjunction with a water collecting area in this embodiment in the form of a bath 6 which has a water collecting area 8 and walls 10 which define the same. The screen is provided to be located such that the lower free edge 11 lies adjacent to the top surface 12 of a portion of the walls 10. The purpose of the screen is to prevent water from the shower head 14 located over the bath from splashing onto the surrounding area 16.

Figures 2a and b illustrate the lower free edge of the screen 4 and show the portion of the top surface 12 of the wall 10 of the bath 6 which underlies the screen 4 when it is in the desired position when the shower head is being used. At the lower free edge of the screen there is in this embodiment provided a sealing member 18 which is typically, although not exclusively, formed of a flexible material such as rubber or plastic. The member is secured to the underside of the screen 4 and is provided with a downwardly depending first flap 20 along a first axis 22, and a second flap 24 depending along axis 26 which is angularly displaced to the first axis. The second flap 24 is provided to encourage water which flows down from the inner screen face 28 to flow into the water collecting area 8 of the bath.

The first flap 20 is provided to minimise the water which passes beyond the screen towards that area 32 of the top surface 12 which lies on the opposing side of the screen from the water collecting area and hence attempts to minimise the passage of water to the external area 16. However in accordance with the invention, when the screen is in the desired position as shown there is provided a gap 30 between the lower free edge of the screen which, in this case is defined by the lower edge of the

member flap 20, and the top surface 12. The gap 30 is provided to allow any water which has reached the top face 12 in the area 32 to flow back through the gap 30 into the water collecting area 8. The flowing of the water from the area 32 towards the water collecting area is encouraged by the relatively increased angle of the top surface 12 with regard to the horizontal plane and the remainder of the walls 10, as shown in more detail in Figure 3 so that the water flows in the direction of arrows 40 towards the water collecting area of the bath 6.

The screen 4 is typically rotatably movable with respect to the bath at or adjacent to the side edge 34 of the screen. As it is desired that the axis of rotation 35 is substantially vertical, as shown in Figure 4, the underside contact face 36 of, in this case a mounting member 38 is angled so to match the angle of the top surface 12 of the wall at the location at which is to be fitted and hence ensure that the correct pivotal movement of the screen 4 is achieved in the vertical axis. Figures 5a-d illustrate the mounting member in more detail and illustrate the contact face 36 shaping in greater detail. It should be appreciated that the shaping of the contact face may be more complex than providing the same in just one angle and that the actual shape will be dependent on the shape of the location on the top surface of the wall 12 to which the same is to be fitted. On the opposing face 40 there are provided engagement means 42 to allow the remainder of the mounting means 44 shown in Figure 2a to be located therewith and be mounted in the vertical plane as required. It should be appreciated that in an alternative embodiment the mounting member 38 may be formed as an integral part of the mounting means 44.

The mounting means is typically also provided with a rising hinge to allow movement of the screen in a vertical direction as the same is pivotably moved with respect to the wall 12 and the

extent of vertical movement is such as to allow the lower free edge 11 of the screen to pass over the highest point 13 of the portion of the top surface of the wall 12 as shown in Figure 2a. The shape of the underside of the bracket ensures that the screen and hinge operate to correctly locate the screen with respect to the wall of top surface 12 of the wall of the water collecting area.

There is therefore provided a screen assembly in accordance with the invention which allows the prevention or minimisation of water from a shower passing into the area 16 surrounding the water collecting area, and the return of any water which could pass into that area, in a more effective manner than previously achieved.

Claims

1. A screen assembly for use with a water collecting area, said assembly including a screen, said screen having a lower free edge depending downwardly from the screen towards a top surface of a wall of the water collecting area and wherein a gap is defined between the said free edge of the screen and said top surface and at least the portion of said top surface underlying the screen is provided at an angle such as to allow water located on the top surface to the side of the screen opposing that on which the water collecting area is located, to flow through the gap towards and into the water collecting area.

2. An assembly according to claim 1 wherein the said free end of the screen is formed by a member attached to the screen and which includes a first flap depending downwardly from the screen in a first axis and a second flap depending from the screen in an axis angularly disposed with respect to said first axis and the free edge of the first flap defines the gap with the top surface of the water collecting area.

3 An assembly according to claim 2 wherein said second flap depends at an angle towards the said water collecting area so as to encourage water which impacts onto the screen to flow back into the water collecting area.

4 An assembly according to claim 1 wherein at least a portion of the top surface of the wall is angled such that the edge of the said portion which lies furthest from the water collecting area is higher than the edge of the portion which lies closest to the water collecting area.

5 An assembly according to claim 1 wherein the angle of the portion of said top surface is in the range of 2-9 degrees from horizontal.

6 An assembly according to claim 5 wherein the angle of the portion of said top surface is in the range of 4-7 degrees from horizontal.

7 An assembly according to any of the preceding claims wherein the assembly includes mounting means for the screen to a one or more support surfaces ,said mounting means including at least one bracket for securing the screen in position with respect to the water collecting area so as to allow pivotal movement of the screen with respect thereto.

8 An assembly according to claim 7 wherein said bracket includes, or is mounted with respect to a member which has, a contact face for contact with the top surface of the wall of the water collecting area, said contact face shaped to substantially match the shape of the said portion of the top surface of the wall of the water collecting area such that the screen when in position above the said portion of the top surface is provided in a substantially vertical plane.

9 An assembly according to claim 8 wherein when a member is provided with the shaped contact face, the opposing face of the member is provided to lie in a substantially horizontal plane when said member is in position on the said portion of the top surface.

10. An assembly according to any of claims 7-9 wherein the mounting means includes at least one rising hinge to allow vertical and pivotal movement of the screen.

11 An assembly according to claim 10 wherein the extent of vertical movement is sufficient to allow the lower free edge of the screen to be moved past the highest point of the said portion of the top surface of the wall of the water collecting area.

12 A screen assembly for use in conjunction with a water collecting area, said assembly comprising a screen, a member located on the screen and depending downwardly towards a top surface of a wall of the water collecting area, said top surface angled at least at the portion underlying the screen downwardly towards the water collecting area and wherein said screen is mounted with respect to at least one support means via mounting means which include at least one bracket, said bracket including, or mounted in conjunction with a mounting member which has, a contact face which is provided at an angle to match that of the top surface of the wall to which it is attached such that the screen, at least when positioned above the said wall, lies in a substantially vertical plane.

13 A screen assembly according to claim 12 wherein the said contact face is provided to be positioned on the said portion of the top surface with an angle of between 4 and 8 degrees to the horizontal plane.

14 A screen assembly according to claim 13 wherein said water collecting area is a bath.

15 A screen assembly according to claim 12 wherein the screen is movable with respect to the water collecting area about a substantially vertical pivot axis and in a substantially vertical direction.

16 A bath, said bath including a water collecting area defined by a surrounding wall and wherein at least a portion of the top face of the wall is provided at an angle downwardly towards the water collecting area of between 2-9 degrees from horizontal to encourage water to flow off the same and into the water collecting area.

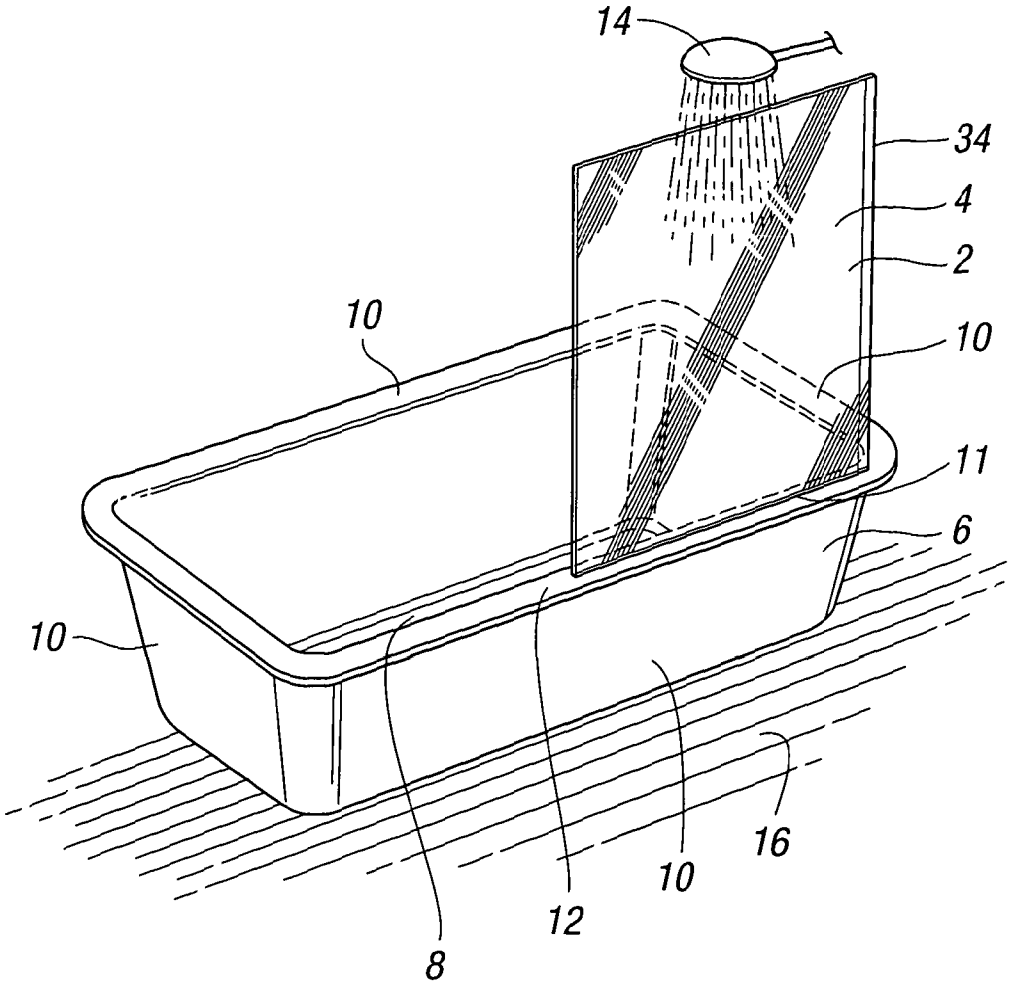

FIG. 1

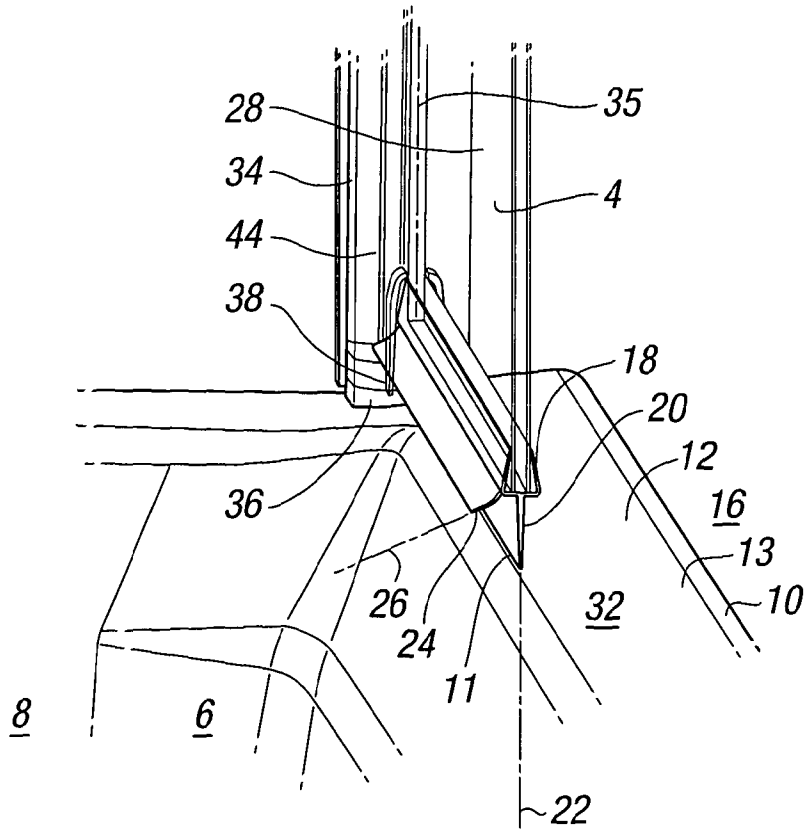
28
35
34
4
44
38
18
20
12
36
16
13
10
26
24
32
11
8
6
22

FIG. 2a

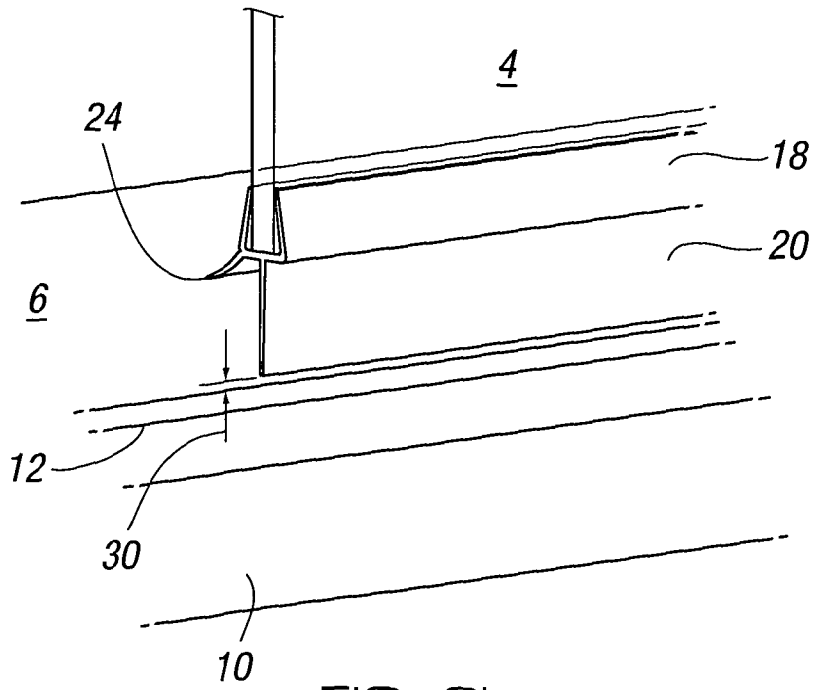
4
24
18
20
6
12
30
10

FIG. 2b

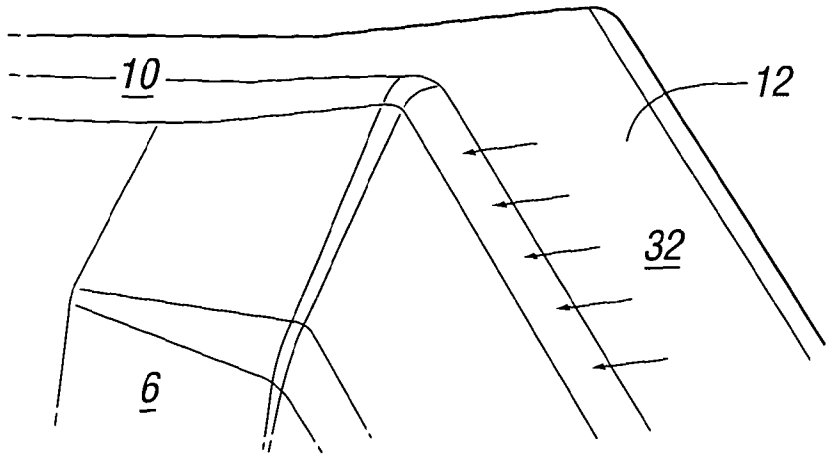

FIG. 3

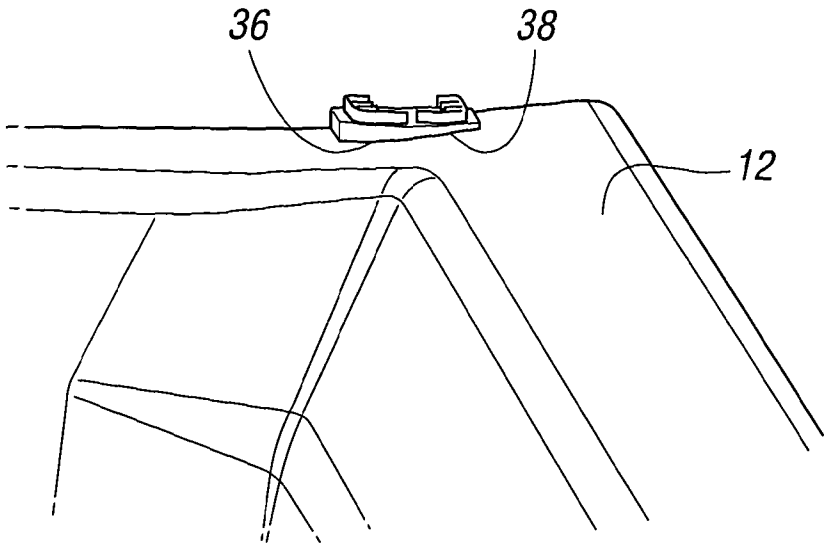

FIG. 4

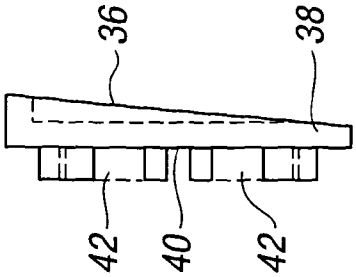

FIG. 5c

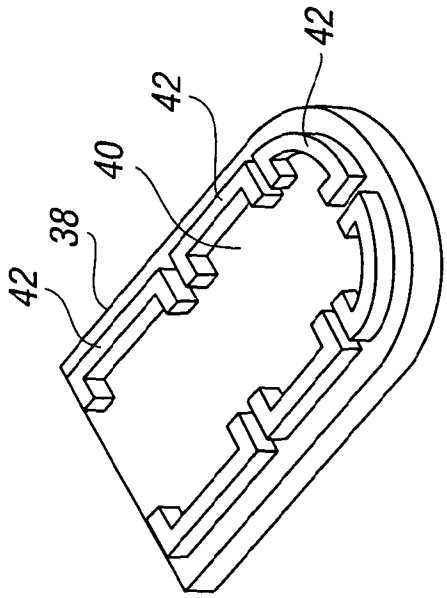

FIG. 5d

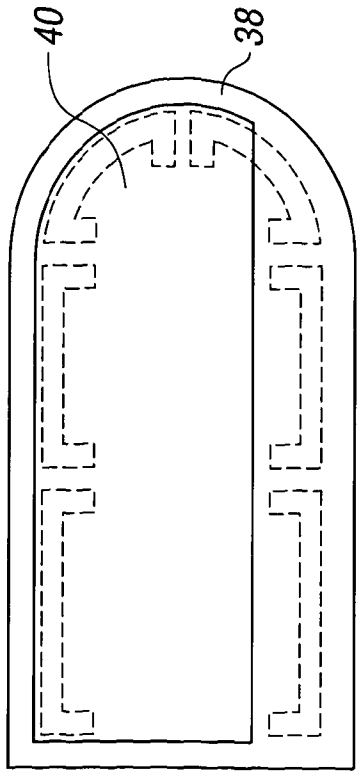

FIG. 5a

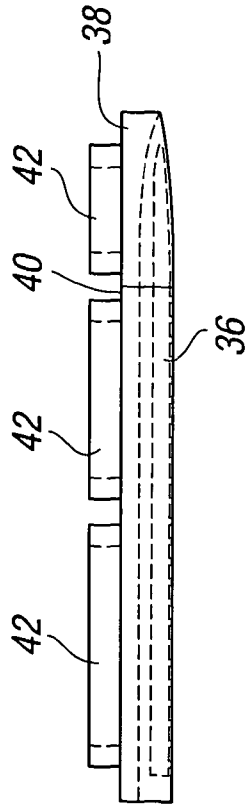

FIG. 5b