(No Model.)

J. KILBURN.

SPINDLE BEARING.

No. 590,323. Patented Sept. 21, 1897.

FIG_1_

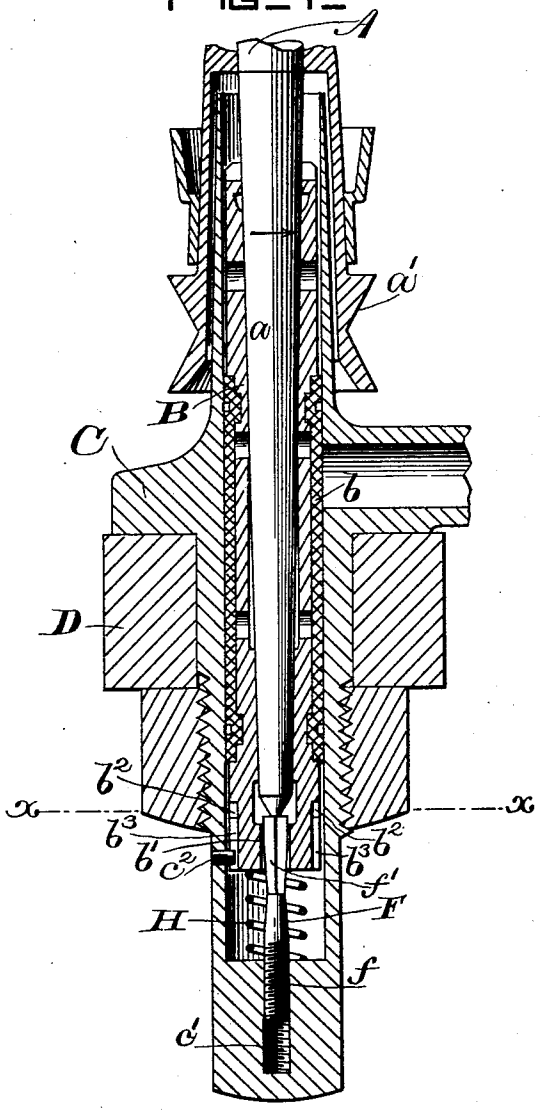

WITNESSES

A. E. Whyte.

John Collins.

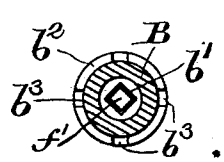

FIG_2_

INVENTOR

John Kilburn

By his Attorneys

Phillips & Anderson

THE NORRIS PETERS CO., PHOTO-LITHO., WASHINGTON, D. C.

UNITED STATES PATENT OFFICE.

JOHN KILBURN, OF BELMONT, MASSACHUSETTS.

SPINDLE-BEARING.

SPECIFICATION forming part of Letters Patent No. 590,323, dated September 21, 1897.

Application filed February 10, 1897. Serial No. 622,827. (No model.)

To all whom it may concern:

Be it known that I, JOHN KILBURN, a citizen of the United States, residing at Belmont, in the county of Middlesex and State of Massachusetts, have invented certain new and useful Improvements in Spindle-Bearings; and I do hereby declare the following to be a full, clear, and exact description of the invention, such as will enable others skilled in the art to which it appertains to make and use the same.

It is common in the art to provide spindles of the self-centering or top type with a tapered pintle, for which a tubular bearing or bolster is provided the bore of which is tapered to correspond with the taper of the spindle-pintle. It is also common to provide a step loosely fitted to an aperture in the base of the bolster and to support the bolster upon a spring which holds it to its fit upon the spindle-pintle.

The present invention relates to improved means for adjusting the upward effort or force with which the spring holds the bolster to its fit upon the spindle-pintle, and to improvements in the mechanism for restraining the bolster from rotation, as hereinafter described and claimed.

A preferred form of the present invention is illustrated in the accompanying drawings, in which—

Figure 1 is a longitudinal vertical section through a spindle-bearing embodying the same, showing the lower portion of spindle in elevation; and Fig. 2 is a section through the bolster on line $x\,x$, Fig. 1.

Similar letters of reference indicate like parts in the several views.

In the drawings, A represents the lower portion of a spindle having the usual tapered pintle a and, conveniently, the sleeve-whirl a'.

B represents the bolster, preferably provided with the wicking or other elastic packing b.

C represents the bolster-case, and D the spindle-rail.

All the above-mentioned parts may be and conveniently are, except as hereinafter specified, of the usual construction, and their form and arrangement may be varied in many details without any departure from the present invention.

As shown in the drawings, F represents the step-pintle, which is projected into the bolster, and the top of which forms the step or support upon which rests the lower end of the spindle-pintle a. The lower portion f of the step-pintle F is threaded and engages, preferably loosely, a threaded aperture c' in the base of the bolster-case C, the arrangement being such that the step-pintle F is held in position by its connection with the bolster-case C and may be rotated to adjust its vertical position in said case. The upper portion f' of the pintle F is polygonal in section or of any suitable shape other than round, and is projected into the bolster B through an aperture b' in the base of the bolster B and substantially in line with the bore thereof. The aperture b' is similar in shape in section to the upper portion f' of the step-pintle F and engages the same, so that a rotation of the bolster B rotates the step-pintle F and raises or lowers it in the case C, the bolster B being left free to reciprocate along the step-pintle F. The aperture b' while of a similar shape is larger in sectional area than the pintle F, and the upper portion f of the pintle F is preferably tapered downwardly to allow the bolster B free movement to permit the spindle A to find its true center of rotation under an unbalanced load.

The bolster B is supported upon a spring H, preferably a coiled spring, surrounding the step-pintle F and resting upon the base of the bolster-case C. The tension or elastic force of the spring H is such that the upward effort exerted thereby is sufficient to sustain the weight of the bolster B, but not the combined weight of the bolster and spindle, so that when the step-pintle F is lowered within the bolster-case C, lowering the spindle A, the bolster B will be forced downward, further compressing the spring H and thereby increasing its upward effort exerted to hold the bolster B to its fit upon the spindle-pintle a.

Around the periphery of the bolster B, adjacent to its base, is formed an annular groove b^2, with which communicate a series of vertical grooves b^3. In the bolster-case C is fixed a pin c^2, which normally engages one of the vertical grooves b^3, the arrangement being such that the bolster B may be depressed against the action of spring H until the pin c^2 enters the groove b^2, and when the pin c^2

is in said groove the bolster B may be turned in either direction until the required adjustment is effected and the pin c^2 brought above the next adjacent groove b^3, when, if the bolster B is released, the pin c^2 will enter and engage said next adjacent groove and restrain the bolster B from rotation in either direction.

The operation of the device of the drawings is as follows: When the lower end of the spindle-pintle a has worn away, or worn into the step sufficiently to cause the spindle A to drop, so that the spring H is so far compressed as to cause it to hold the bolster B too tightly to its fit, so that the spindle-pintle a turns with too great friction therein, the operator with any convenient instrument depresses the bolster B until the pin c^2 is brought into the slot b^2 and then rotates the bolster B in the direction of the arrow-head, Fig. 1, until the step-pintle F has been sufficiently rotated to raise it by means of its threaded connection with case C to the proper height within said case to allow the spring H to expand until it holds the bolster B to its fit with the force required. The pin c^2 is then allowed to engage the nearest slot b^3, as before stated, and the bolster B is held from further rotation. To secure a reverse result, the bolster B is rotated in an opposite direction.

Having thus described my invention, I desire to say that I do not consider the same as limited to details of construction as herein shown and described, as the same may be modified in many details without any departure therefrom; but

I claim as novel and desire to secure by Letters Patent of the United States—

1. The combination with a spindle having a tapered pintle, of a bolster the bore of which is correspondingly tapered, a bolster-case, a spring supporting the bolster within the case, and means actuated by a rotation of the bolster for adjusting the tension of the spring, substantially as described.

2. The combination with a spindle having a tapered pintle, of a bolster having a correspondingly-tapered bore, a step-pintle movable longitudinally within the bolster, a coiled spring surrounding the step-pintle and acting to hold the bolster to its fit on the spindle-pintle, and means for rotating the step-pintle to adjust the tension of the spring, substantially as described.

3. The combination with a spring-supported bolster, of an annular stop-groove around said bolster, a series of vertical grooves communicating with the annular stop-groove, and a fixed pin arranged to engage any of said vertical grooves, and to be brought by a vertical movement of the bolster into the annular stop-groove, substantially as described.

4. The combination with a spindle having a tapered pintle and a step upon which said pintle rests, of a bolster having a corresponding-tapered bore, means to hold said bolster to its fit on the spindle-pintle with a yielding pressure, and means to regulate said pressure by a relative rotation of the bolster and step, substantially as described.

5. The combination with a spindle having a tapered pintle, and a step upon which said pintle rests, of a bolster having a corresponding-tapered bore, means to hold said bolster to its fit on the spindle-pintle with a yielding pressure, and means to regulate said pressure, by a rotation of the bolster, substantially as described.

In testimony whereof I affix my signature in presence of two witnesses.

JOHN KILBURN.

Witnesses:
BENJAMIN PHILLIPS,
A. E. WHYTE.