Aug. 5, 1958 W. J. WILKE 2,846,061

COMBINED WIRE REEL AND SHIPPING CARTON

Filed April 19, 1955

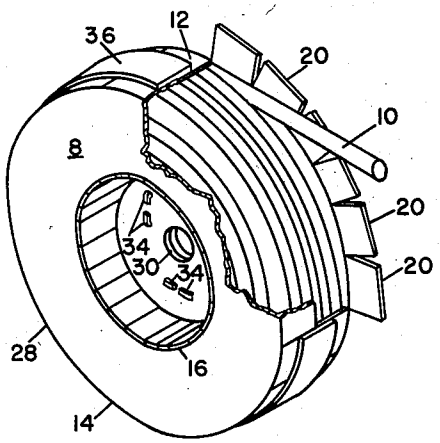

Fig 1

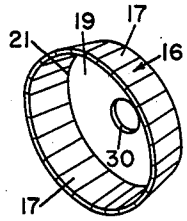

Fig 2

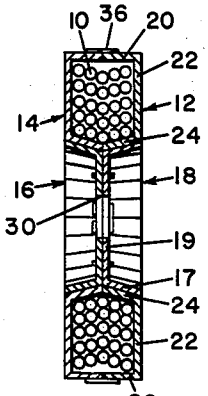

Fig 5

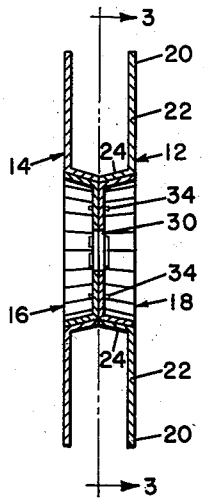

Fig 4

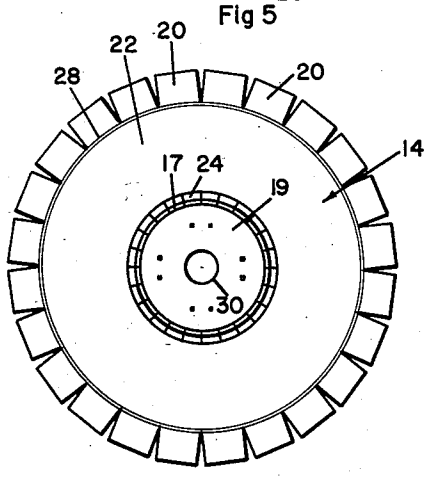

Fig 3

William J. Wilke
INVENTOR.

BY Walter G. Finch
ATTORNEY

United States Patent Office 2,846,061 Patented Aug. 5, 1958

2,846,061

COMBINED WIRE REEL AND SHIPPING CARTON

William J. Wilke, Baltimore, Md.

Application April 19, 1955, Serial No. 502,323

3 Claims. (Cl. 206—59)

This invention relates generally to wire containing devices, and more particularly to a combined wire reel and a shipping carton therefor. Although this invention is illustrated in connection with a reel in the form of a container for shipping wire and cable, it is to be understood that the invention is not limited thereto as it can most readily be used for shipping cord, rope, and the like.

It is one of the objects of this invention to provide a combined wire reel and shipping container for shipping wire, cable and the like.

It is another object of this invention to provide a combined reel and shipping container therefor which is compact, easy to pack with wire or cable, durable in shipping, and easy to unpack when it is desired to utilize the wire or cable.

Still another object of this invention is to provine a combined reel and shipping carton therefor which is economical to manufacture, and which is efficient and reliable in operation.

Even still another object of this invention is to provide a unique design of wire reel and shipping carton therefor.

And another object of this invention is to provide a combined wire reel and shipping carton which is of simplified design, and which is easy to assemble.

These and other objects of this invention, as well as attendant advantages thereof, will be readily appreciated as the same becomes better understood by reference to the following detailed description when considered in connection with the single accompanying drawing, in which:

Fig. 1 is a perspective view of the invention comprising a combined wire reel and carton therefor;

Fig. 2 is a perspective of a detail of the invention illustrated in Fig. 1;

Fig. 3 is a cross section taken along line 3—3 of Fig. 4;

Fig. 4 is a transverse cross section of the wire reel and carton; and

Fig. 5 is a transverse cross section similar to Fig. 4 of the combined wire reel and carton, showing the wire in position and the container closed.

In accordance with the invention, there is provided a combined wire reel and container therefor for receiving and storing wire during shipment and for storage thereof after being shipped. This combined wire reel and container comprises structure having two elements for defining a hub. The hub has an aperture therein for receiving a mandrel during the packaging and use of the wire which is to be received by the combined reel and container.

A housing is mounted radially of the hub for receiving and storing the wire and the like. This housing has two transverse walls, portions of which can be flexed to close the housing after the wire has been received between its walls. A sealing tape or the like can be utilized to seal the flexed portions so as to seal the

housing to prevent moisture or the like from entering therein during shipment.

Referring now to Figs. 1 through 4 of the drawing, there is illustrated a combined wire reel and carton **8** for receiving and storing wire, cable and the like. This combined wire reel and carton **8** comprises two identical hub elements **16** and **18**, and two wheel like elements **12** and **14**, which are also identical, and which are mounted radially of the hub elements **16** and **18** for receiving and storing wire or cable **10**.

As shown in Fig. 2, the hub element **16** or **18** comprises a vertical wall portion **19** and a plurality of flap portions **17** which are formed integral with the wall portion **19** along line **21**. These flap portions **17**, together with the wall portion **19**, form a frusto-conical hub **16** or **18**.

As best seen in Figs. 4 and 5, the hub elements **16** and **18** are each provided with an aperture **30** for receiving a mandrel (not shown). These hub elements are secured together by a plurality of staples **34** which join the wall portions **19**, as shown in Figs. 1, 4, and 5.

The wheel-like portions **12** and **14** of the combined wire reel and carton **8** define a housing for receiving and storing the wire or cable **10**. The wheel-like sections **12** and **14** are mounted radially of the hub elements **18** and **16**, respectively. These sections **12** and **14** are identical in shape, and each consists of a vertical wall **22** having a plurality of outer flap elements **20**, best seen in Figs. 1 and 3, and inner flap elements **24**, best seen in Figs. 3, 4, and 5. The outer and inner flap elements are preferably formed integral with the vertical wall portion **22**. The outer flap elements are arranged to be flexed or bent along a line, such as the curved line **28**, so as to close the combined wire reel and carton **8** after the wire or cable **10** has been placed therein. The inner flap members **24** are also arranged to be flexed or bent along a curved line inwardly so that they can be glued to the hub elements **16** and **18** by means of a suitable cement or the like.

The hub elements **16** and **18** as well as the wheel-type sections **12** and **14** are preferably formed of a stiff cardboard material by a stamping process. The hub elements **16** and **18** are then formed by bending or flexing the flaps **17** along the circular line **21** to form frusto-conical sections, which are then secured together along the face portions **19** by staples **34**. The wheel-like portions or sections are then mounted on the hub elements **16** and **18** by securing the flap portions to the hub elements **16** and **18** by glue or the like.

The combined wire reel and carton **8** is then placed on a mandrel (not shown), and the wire or cable is wound thereon. After the wire or cable is placed on the container reel, as previously described, the flap elements or portions **20** are then bent along the line **28** to close the reel-carton **8** and then a suitable adhesive tape **36** can be used to secure the flap elements **20** in position and to prevent the entrance into the combined reel-carton **8** of moisture and dust and the like.

When it is desired to remove the wire or cable **10** from the reel-carton **8**, the end of the wire that is allowed to protrude through the reel-carton **8** on packaging is now used to remove the tape **36**. The reel-carton **8** can be placed on a suitable mandrel to assist in unraveling the wire for use.

Obviously many modifications and variations of the present invention are possible in light of the above teachings. It is, therefore, to be understood that within the scope of the appended claims the invention may be practiced otherwise than as specifically described.

What is claimed is:

1. A combined reel and carton, comprising, structure

defining a hub including a pair of frustro-conical elements, each element having its larger base open and its smaller base closed, with the smaller bases of said elements being mounted adjacent to each other, means for securing said frustro-conical elements together, and structure defining a carton including a pair of spaced annular end walls having a plurality of flaps formed on the inner and outer peripheral edges thereof, said flaps on the inner peripheral edges of each of said end walls being secured to the corresponding slant surfaces of said hub elements, with the flaps on the outer peripheral edges of each of said end walls being arranged to close said carton structure.

2. An arrangement as set forth in claim 1, wherein said means for securing the smaller bases of said frustro-conical elements together include fasteners.

3. An arrangement as set forth in claim 1, and tape

means in applied position for securing the flaps at the outer peripheral edges of said annular end walls together to close said carton.

References Cited in the file of this patent

UNITED STATES PATENTS

2,029,975	Winchester	Feb. 4, 1936
2,069,357	Dinion	Feb. 2, 1937
2,402,093	Schermuly et al.	June 11, 1946
2,462,261	Goldberg	Feb. 22, 1949
2,527,842	Mullaney	Oct. 31, 1950
2,706,592	Schaller	Apr. 19, 1955

FOREIGN PATENTS

9,789	Australia	Feb. 1, 1928
642,982	Great Britain	Sept. 13, 1950