US 20160040754A1

(19) **United States**

(12) **Patent Application Publication**

(10) **Pub. No.: US 2016/0040754 A1**

(43) **Pub. Date: Feb. 11, 2016**

SCHOOLCRAFT

(54) **MULTI-SPEED TRANSMISSION**

(71) Applicant: **ALLISON TRANSMISSION, INC.**, INDIANAPOLIS, IN (US)

(72) Inventor: **BRIAN SCHOOLCRAFT**, INDIANAPOLIS, IN (US)

(21) Appl. No.: **14/453,660**

(22) Filed: **Aug. 7, 2014**

Publication Classification

(51) **Int. Cl.**
F16H 3/64 (2006.01)

(52) **U.S. Cl.**
CPC ***F16H 3/64*** (2013.01); *F16H 2200/0065* (2013.01); *F16H 2200/2012* (2013.01)

(57) **ABSTRACT**

The present disclosure provides a multiple speed transmission having an input member, an output member, a plurality of planetary gearsets, a plurality of interconnecting members and a plurality of torque-transmitting mechanisms. The plurality of planetary gear sets includes first, second and third members. The input member is continuously interconnected with at least one member of one of the plurality of planetary gear sets, and the output member is continuously interconnected with another member of one of the plurality of planetary gear sets. At least nine forward speeds and one reverse speed are achieved by the selective engagement of the plurality of torque-transmitting mechanisms.

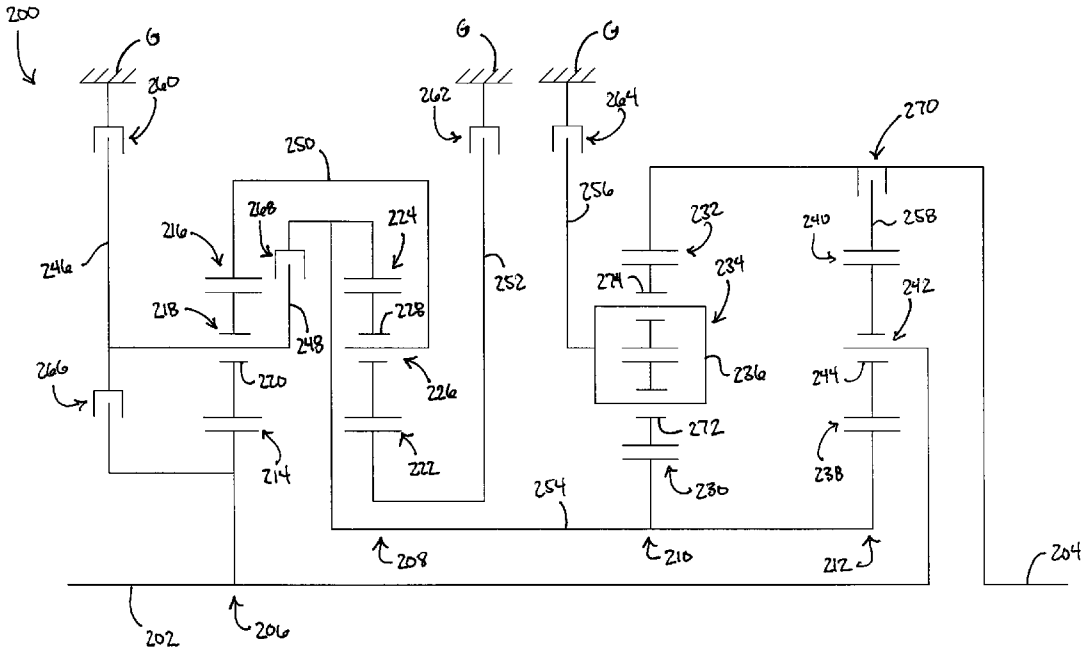

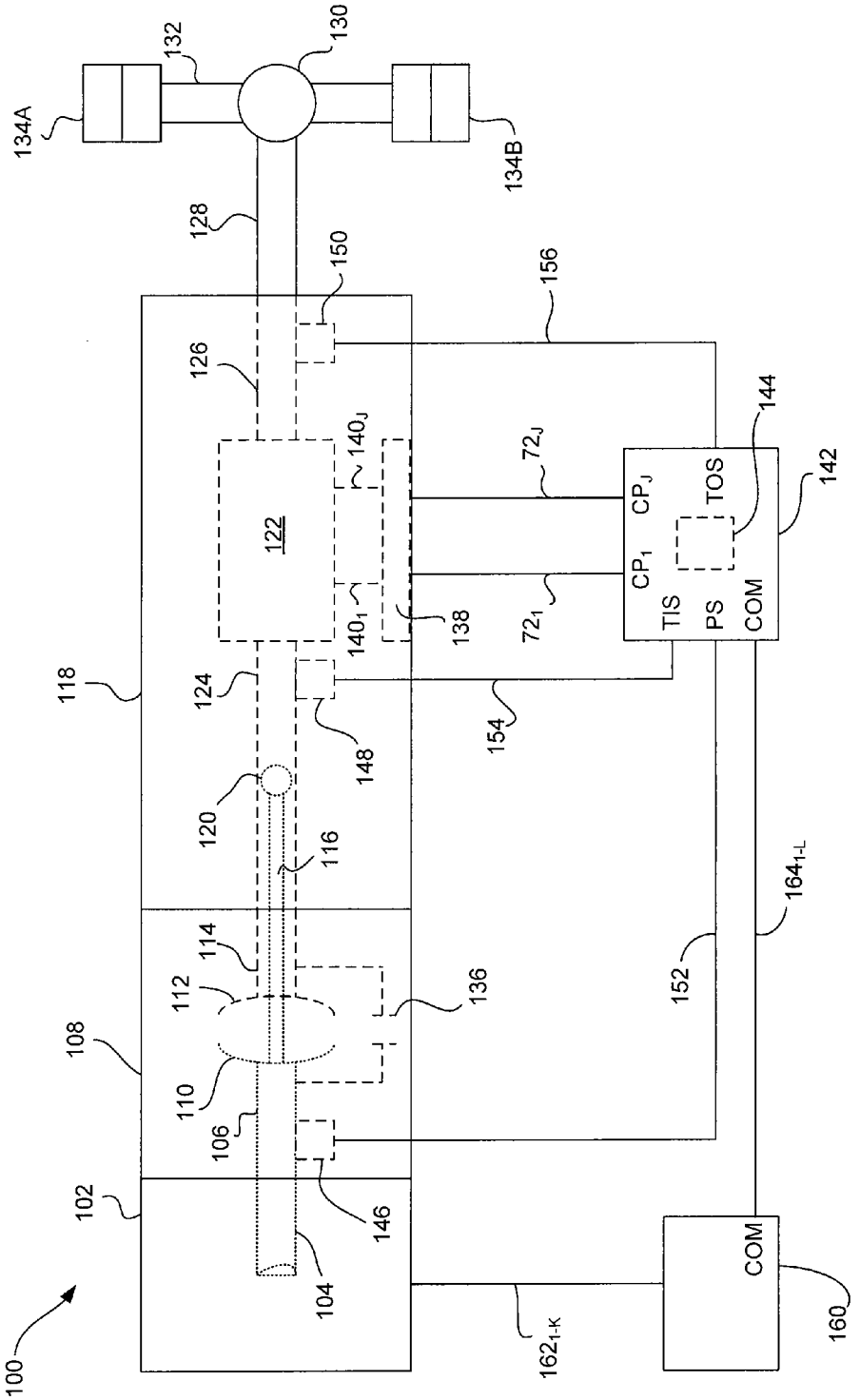
100
102
104
106
108
110
112
114
116
118
120
122
124
126
128
130
132
134A
134B
136
138
140J
140₁
142
144
146
148
150
152
154
156
160
162₁-K
164₁-L
72J
72₁
CPJ
CP₁
TOS
TIS
PS
COM
COM

Fig. 1

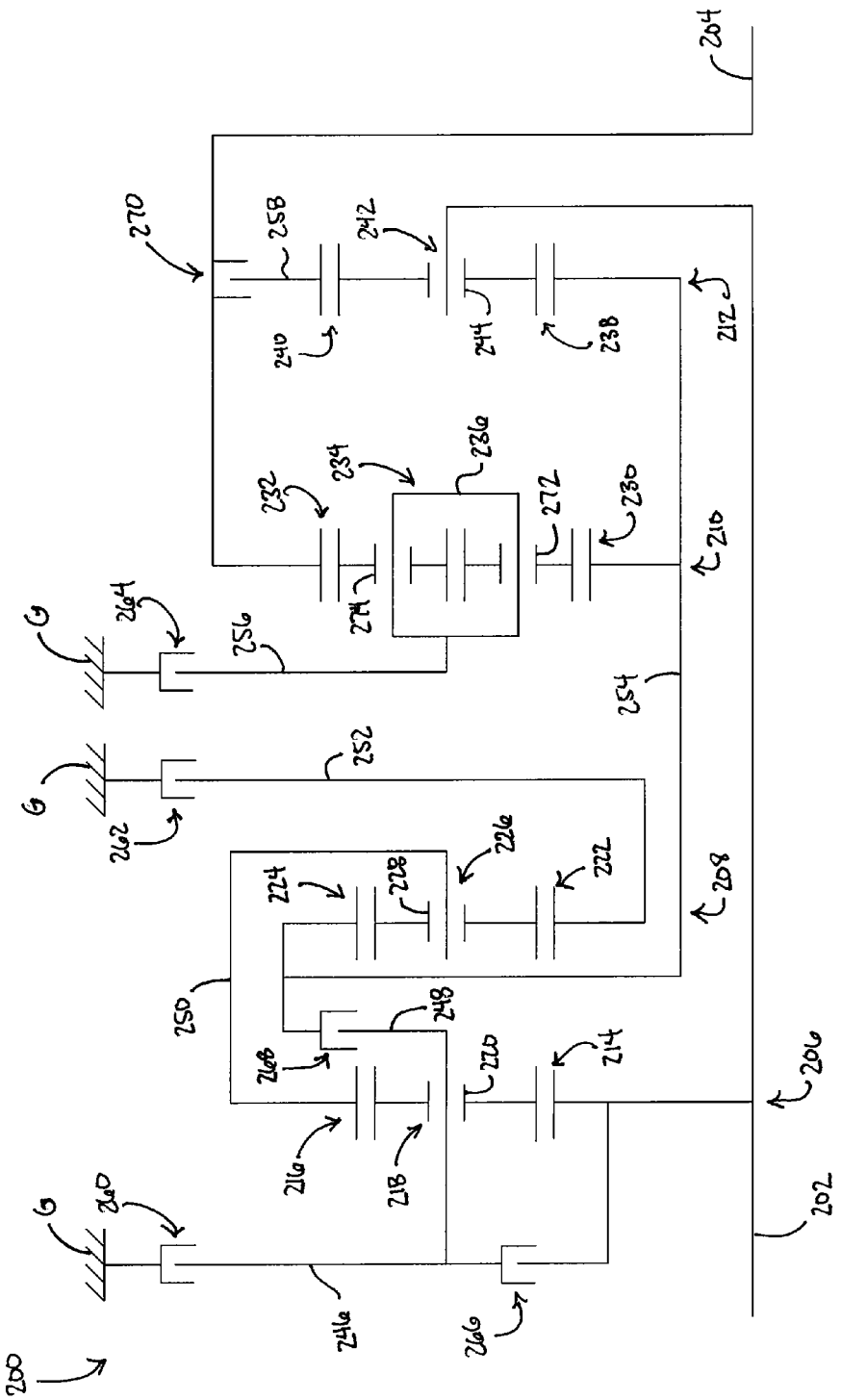
200
202
204
206
208
210
212
214
216
218
220
222
224
226
228
230
232
234
236
238
240
242
244
246
248
250
252
254
256
258
260
262
264
270
272
274
G

Fig. 2

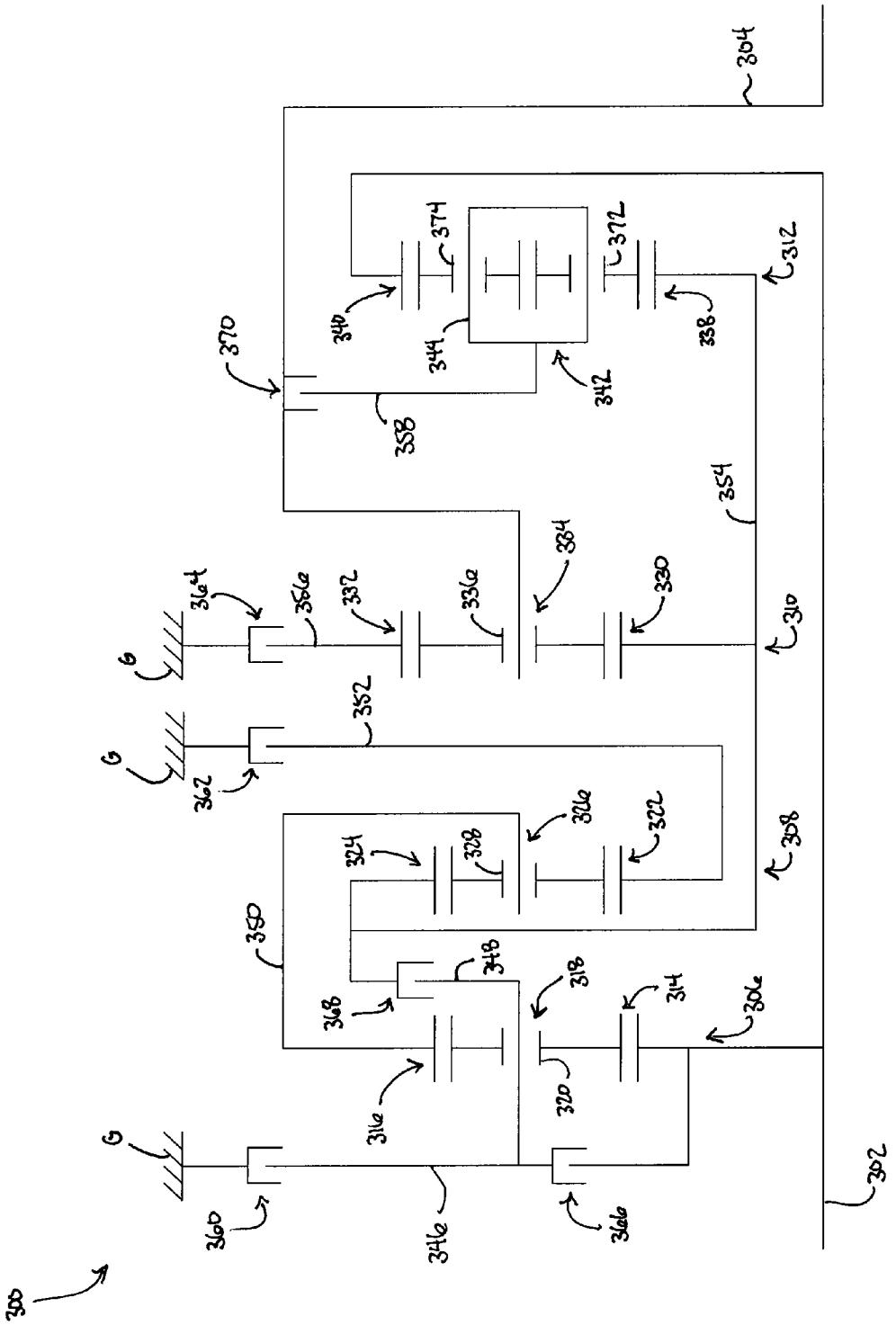
300
302
304
306
308
310
312
314
316
318
320
322
324
326
328
330
332
334
336
338
340
342
344
346
348
350
352
354
356
358
360
362
364
366
370
372
374
G

Fig. 3

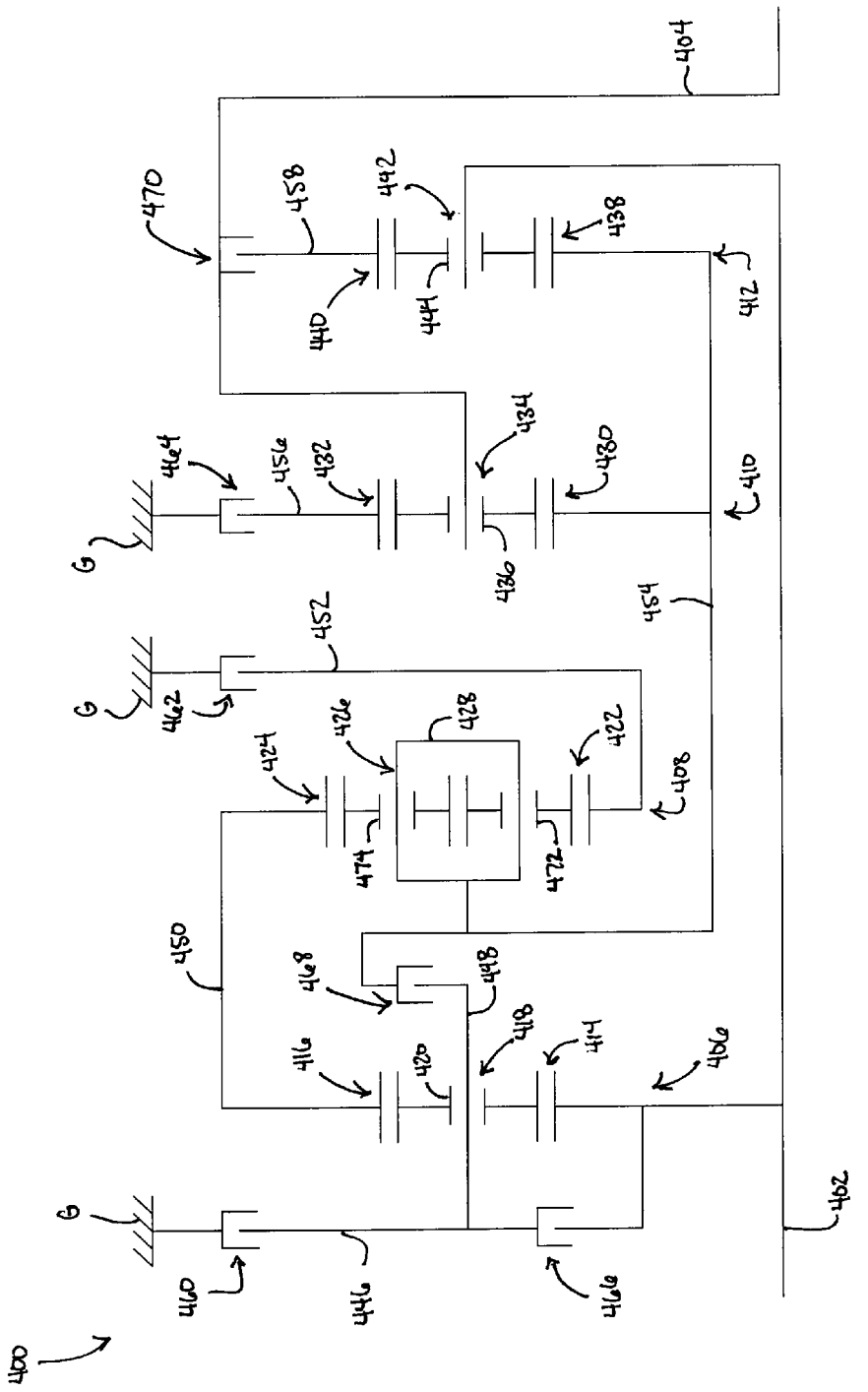
400
402
404
406
408
410
412
414
416
418
420
422
424
426
428
430
432
434
436
438
440
442
444
446
448
450
452
454
456
458
460
462
464
470
472
474
480
G
G
G

Fig. 4

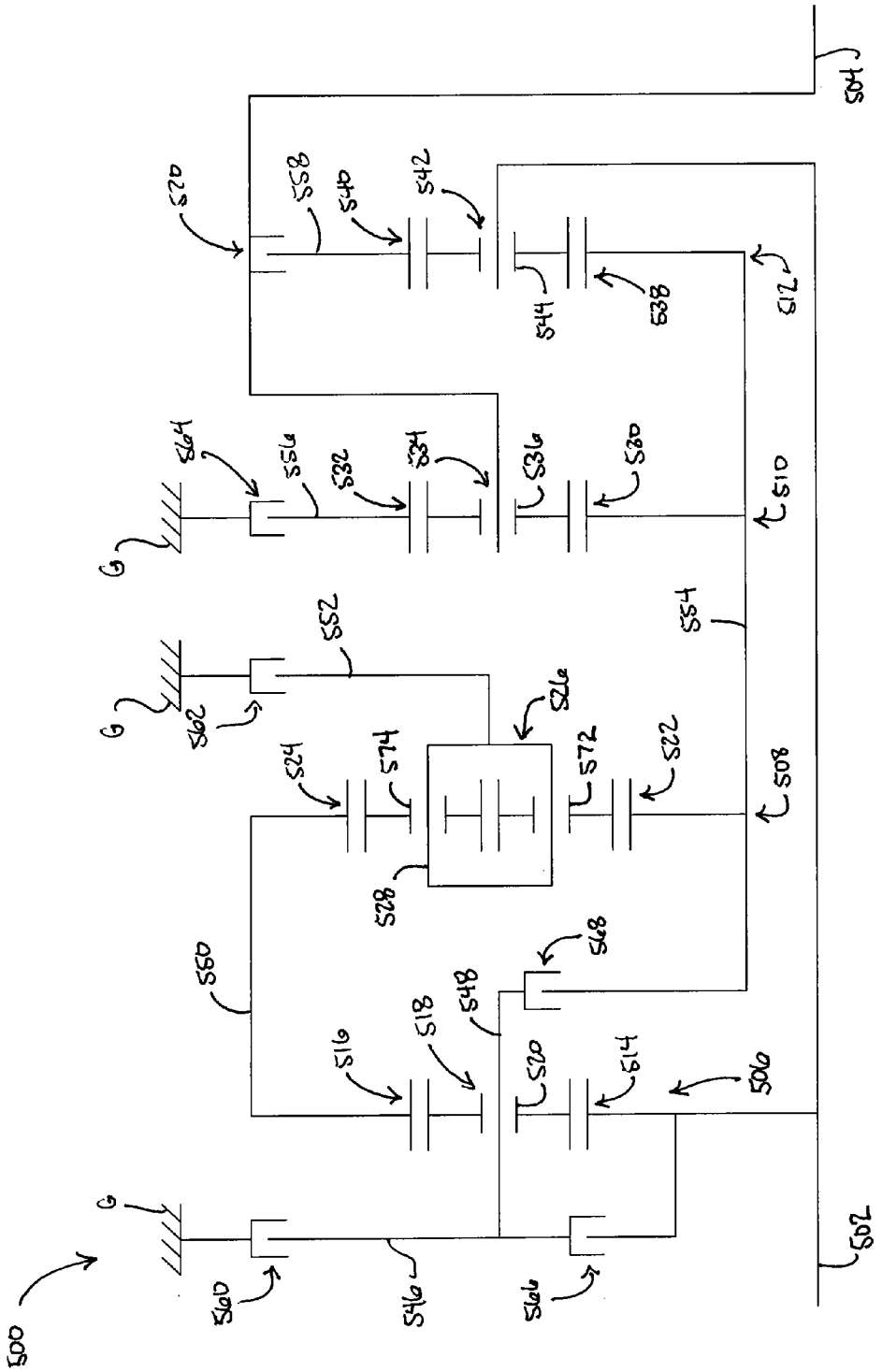
500
502
504
506
508
510
512
514
516
518
520
522
524
526
528
530
532
534
536
538
540
542
544
546
548
550
552
554
560
562
572
574
G

Fig. 5



Gear State	Gear Ratio	Torque Transmitting Mechanisms					
		C1	C2	C3	C4	C5	C6
Rev	-4.93	x	x			x	
1st	5.51		x		x	x	
2nd	3.33			x	x	x	
3rd	2.31		x	x		x	
4th	1.66		x			x	x
5th	1.21		x	x			x
6th	1.00			x	x		x
7th	0.86		x		x		x
8th	0.71	x			x		x
9th	0.60	x	x				x

Fig. 6

MULTI-SPEED TRANSMISSION

FIELD OF THE DISCLOSURE

[0001] The present disclosure relates to a multiple speed transmission, and in particular to a multiple speed transmission capable of achieving nine or more speeds.

BACKGROUND

[0002] Multiple speed transmissions use a number of friction clutches or brakes, planetary gearsets, shafts, and other elements to achieve a plurality of gear or speed ratios. The architecture, i.e., packaging or layout of the aforementioned elements, is determined based on cost, size, packaging constraints, and desired ratios. There is a need for new architectural designs of multiple speed transmissions for achieving different ratios with improved performance, cost, efficiency, responsiveness, and packaging.

SUMMARY

[0003] In one embodiment of the present disclosure, a multiple speed transmission includes an input member; an output member; first, second, third and fourth planetary gearsets each having first, second and third members; a plurality of interconnecting members each connected between at least one of the first, second, third, and fourth planetary gearsets and at least another of the first, second, third, and fourth planetary gearsets; a first torque-transmitting mechanism selectively engageable to interconnect the second member of the first planetary gearset with a stationary member; a second torque-transmitting mechanism selectively engageable to interconnect the first member of the second planetary gearset with the stationary member; a third torque-transmitting mechanism selectively engageable to interconnect the second member of the third planetary gearset with the stationary member; a fourth torque-transmitting mechanism selectively engageable to interconnect the second member of the first planetary gearset with the first member of the first planetary gearset and the input member; a fifth torque-transmitting mechanism selectively engageable to interconnect the second member of the first planetary gearset with the third member of the second planetary gearset, the first member of the third planetary gearset, and the first member of the fourth planetary gearset; and a sixth torque-transmitting mechanism selectively engageable to interconnect the third member of the fourth planetary gearset with the third member of the third planetary gearset and the output member; wherein the torque transmitting mechanisms are selectively engageable in combinations of at least three to establish at least nine forward speed ratios and at least one reverse speed ratio between the input member and the output member.

[0004] In one example of this embodiment, one of the first, second, third and fourth planetary gearsets comprises an idler planet planetary gearset. In a second example, the third planetary gearset comprises the idler planet planetary gearset. In a third example, the third member of the third planetary gearset is continuously interconnected with the output member. In a fourth example, the input member is continuously interconnected with the first member of the first planetary gearset and the second member of the fourth planetary gearset.

[0005] In a fifth example, the plurality of interconnecting members includes a first interconnecting member continuously interconnecting the third member of the first planetary gearset with the second member of the second planetary gearset. In a sixth example, the plurality of interconnecting members includes a second interconnecting member continuously interconnecting the third member of the second planetary gearset with the first member of the third planetary gearset and the first member of the fourth planetary gearset. In a seventh example, the first, second, and third members of the first, second, third, and fourth planetary gearsets are each at least one of a sun gear, a ring gear, and a carrier member.

[0006] In another embodiment of this disclosure, a multiple speed transmission includes an input member; an output member; first, second, third and fourth planetary gearsets each having first, second and third members; a plurality of interconnecting members each connected between at least one of the first, second, third, and fourth planetary gearsets and at least another of the first, second, third, and fourth planetary gearsets; a first torque-transmitting mechanism selectively engageable to interconnect the second member of the first planetary gearset with a stationary member; a second torque-transmitting mechanism selectively engageable to interconnect the first member of the second planetary gearset with the stationary member; a third torque-transmitting mechanism selectively engageable to interconnect the third member of the third planetary gearset with the stationary member; a fourth torque-transmitting mechanism selectively engageable to interconnect the second member of the first planetary gearset with the first member of the first planetary gearset and the input member; a fifth torque-transmitting mechanism selectively engageable to interconnect the second member of the first planetary gearset with the third member of the second planetary gearset, the first member of the third planetary gearset, and the first member of the fourth planetary gearset; and a sixth torque-transmitting mechanism selectively engageable to interconnect the second member of the fourth planetary gearset with the second member of the third planetary gearset and the output member; wherein the torque transmitting mechanisms are selectively engageable in combinations of at least three to establish at least nine forward speed ratios and at least one reverse speed ratio between the input member and the output member.

[0007] In one example of this embodiment, the fourth planetary gearset includes an idler planet planetary gearset. In a second example, the input member is continuously interconnected with the first member of the first planetary gearset and the third member of the fourth planetary gearset. In a third example, the plurality of interconnecting members includes a first interconnecting member continuously interconnecting the third member of the first planetary gearset with the second member of the second planetary gearset. In a fourth example, the plurality of interconnecting members includes a second interconnecting member continuously interconnecting the third member of the second planetary gearset with the first member of the third planetary gearset and the first member of the fourth planetary gearset. In a fifth example, the first, second, and third members of the first, second, third, and fourth planetary gearsets are each at least one of a sun gear, a ring gear, and a carrier member.

[0008] In a different embodiment of the present disclosure, a multiple speed transmission includes an input member; an output member; first, second, third and fourth planetary gearsets each having first, second and third members; a plurality of interconnecting members each connected between at least one of the first, second, third, and fourth planetary gearsets and at least another of the first, second, third, and fourth

planetary gearsets; a first torque-transmitting mechanism selectively engageable to interconnect the second member of the first planetary gearset with a stationary member; a second torque-transmitting mechanism selectively engageable to interconnect the first member or second member of the second planetary gearset with the stationary member; a third torque-transmitting mechanism selectively engageable to interconnect the third member of the third planetary gearset with the stationary member;a fourth torque-transmitting mechanism selectively engageable to interconnect the second member of the first planetary gearset with the first member of the first planetary gearset and the input member; a fifth torque-transmitting mechanism selectively engageable to interconnect the second member of the first planetary gearset with the first member of the third planetary gearset, the first member of the fourth planetary gearset, and the first member or second member of the second planetary gearset; and a sixth torque-transmitting mechanism selectively engageable to interconnect the second member of the fourth planetary gearset with the second member of the third planetary gearset and the output member; wherein the torque transmitting mechanisms are selectively engageable in combinations of at least three to establish at least nine forward speed ratios and at least one reverse speed ratio between the input member and the output member.

[0009] In one example of this embodiment, the second planetary gearset comprises the idler planet planetary gearset. In a second example, the input member is continuously interconnected with the first member of the first planetary gearset and the third member of the fourth planetary gearset; and the output member is continuously interconnected with the second member of the third planetary gearset. In a third example, the plurality of interconnecting members includes a first interconnecting member continuously interconnecting the third member of the first planetary gearset with the third member of the second planetary gearset. In a fourth example, the plurality of interconnecting members includes a second interconnecting member continuously interconnecting the second member of the second planetary gearset with the first member of the third planetary gearset and the first member of the fourth planetary gearset. In a fifth example, the plurality of interconnecting members includes a second interconnecting member continuously interconnecting the first member of the second planetary gearset with the first member of the third planetary gearset and the first member of the fourth planetary gearset.

BRIEF DESCRIPTION OF THE DRAWINGS

[0010] The above-mentioned aspects of the present disclosure and the manner of obtaining them will become more apparent and the disclosure itself will be better understood by reference to the following description of the embodiments of the disclosure, taken in conjunction with the accompanying drawings, wherein:

[0011] FIG. **1** is an exemplary block diagram and schematic view of one illustrative embodiment of a powered vehicular system;

[0012] FIG. **2** is a diagrammatic view of one embodiment of a multiple speed transmission;

[0013] FIG. **3** is a diagrammatic view of a second embodiment of a multiple speed transmission;

[0014] FIG. **4** is a diagrammatic view of a third embodiment of a multiple speed transmission;

[0015] FIG. **5** is a diagrammatic view of a fourth embodiment of a multiple speed transmission; and

[0016] FIG. **6** is a truth table presenting an example of a state of engagement of various torque transmitting mechanisms in each of the available forward and reverse speeds or gear ratios of the transmission illustrated in FIGS. **2-5**.

[0017] Corresponding reference numerals are used to indicate corresponding parts throughout the several views.

DETAILED DESCRIPTION

[0018] The embodiments of the present disclosure described below are not intended to be exhaustive or to limit the disclosure to the precise forms disclosed in the following detailed description. Rather, the embodiments are chosen and described so that others skilled in the art may appreciate and understand the principles and practices of the present disclosure.

[0019] Referring now to FIG. **1**, a block diagram and schematic view of one illustrative embodiment of a vehicular system **100** having a drive unit **102** and transmission **118** is shown. In the illustrated embodiment, the drive unit **102** may include an internal combustion engine, diesel engine, electric motor, or other power-generating device. The drive unit **102** is configured to rotatably drive an output shaft **104** that is coupled to an input or pump shaft **106** of a conventional torque converter **108**. The input or pump shaft **106** is coupled to an impeller or pump **110** that is rotatably driven by the output shaft **104** of the drive unit **102**. The torque converter **108** further includes a turbine **112** that is coupled to a turbine shaft **114**, and the turbine shaft **114** is coupled to, or integral with, a rotatable input shaft **124** of the transmission **118**. The transmission **118** can also include an internal pump **120** for building pressure within different flow circuits (e.g., main circuit, lube circuit, etc.) of the transmission **118**. The pump **120** can be driven by a shaft **116** that is coupled to the output shaft **104** of the drive unit **102**. In this arrangement, the drive unit **102** can deliver torque to the shaft **116** for driving the pump **120** and building pressure within the different circuits of the transmission **118**.

[0020] The transmission **118** can include a planetary gear system **122** having a number of automatically selected gears. An output shaft **126** of the transmission **118** is coupled to or integral with, and rotatably drives, a propeller shaft **128** that is coupled to a conventional universal joint **130**. The universal joint **130** is coupled to, and rotatably drives, an axle **132** having wheels **134**A and **134**B mounted thereto at each end. The output shaft **126** of the transmission **118** drives the wheels **134**A and **134**B in a conventional manner via the propeller shaft **128**, universal joint **130** and axle **132**.

[0021] A conventional lockup clutch **136** is connected between the pump **110** and the turbine **112** of the torque converter **108**. The operation of the torque converter **108** is conventional in that the torque converter **108** is operable in a so-called "torque converter" mode during certain operating conditions such as vehicle launch, low speed and certain gear shifting conditions. In the torque converter mode, the lockup clutch **136** is disengaged and the pump **110** rotates at the rotational speed of the drive unit output shaft **104** while the turbine **112** is rotatably actuated by the pump **110** through a fluid (not shown) interposed between the pump **110** and the turbine **112**. In this operational mode, torque multiplication occurs through the fluid coupling such that the turbine shaft **114** is exposed to drive more torque than is being supplied by the drive unit **102**, as is known in the art. The torque converter

108 is alternatively operable in a so-called "lockup" mode during other operating conditions, such as when certain gears of the planetary gear system **122** of the transmission **118** are engaged. In the lockup mode, the lockup clutch **136** is engaged and the pump **110** is thereby secured directly to the turbine **112** so that the drive unit output shaft **104** is directly coupled to the input shaft **124** of the transmission **118**, as is also known in the art.

[0022] The transmission **118** further includes an electro-hydraulic system **138** that is fluidly coupled to the planetary gear system **122** via a number, J, of fluid paths, $\mathbf{140}_1$-$\mathbf{140}_J$, where J may be any positive integer. The electro-hydraulic system **138** is responsive to control signals to selectively cause fluid to flow through one or more of the fluid paths, $\mathbf{140}_1$-$\mathbf{140}_J$, to thereby control operation, i.e., engagement and disengagement, of a plurality of corresponding friction devices in the planetary gear system **122**. The plurality of friction devices may include, but are not limited to, one or more conventional brake devices, one or more torque transmitting devices, and the like. Generally, the operation, i.e., engagement and disengagement, of the plurality of friction devices is controlled by selectively controlling the friction applied by each of the plurality of friction devices, such as by controlling fluid pressure to each of the friction devices. In one example embodiment, which is not intended to be limiting in any way, the plurality of friction devices include a plurality of brake and torque transmitting devices in the form of conventional clutches that may each be controllably engaged and disengaged via fluid pressure supplied by the electro-hydraulic system **138**. In any case, changing or shifting between the various gears of the transmission **118** is accomplished in a conventional manner by selectively controlling the plurality of friction devices via control of fluid pressure within the number of fluid paths $\mathbf{140}_1$-$\mathbf{140}_J$.

[0023] The system **100** further includes a transmission control circuit **142** that can include a memory unit **144**. The transmission control circuit **142** is illustratively microprocessor-based, and the memory unit **144** generally includes instructions stored therein that are executable by a processor of the transmission control circuit **142** to control operation of the torque converter **108** and operation of the transmission **118**, i.e., shifting between the various gears of the planetary gear system **122**. It will be understood, however, that this disclosure contemplates other embodiments in which the transmission control circuit **142** is not microprocessor-based, but is configured to control operation of the torque converter **108** and/or transmission **118** based on one or more sets of hardwired instructions and/or software instructions stored in the memory unit **144**.

[0024] In the system **100** illustrated in FIG. **1**, the torque converter **108** and the transmission **118** include a number of sensors configured to produce sensor signals that are indicative of one or more operating states of the torque converter **108** and transmission **118**, respectively. For example, the torque converter **108** illustratively includes a conventional speed sensor **146** that is positioned and configured to produce a speed signal corresponding to the rotational speed of the pump shaft **106**, which is the same rotational speed of the output shaft **104** of the drive unit **102**. The speed sensor **146** is electrically connected to a pump speed input, PS, of the transmission control circuit **142** via a signal path **152**, and the transmission control circuit **142** is operable to process the speed signal produced by the speed sensor **146** in a conventional manner to determine the rotational speed of the turbine shaft **106**/drive unit output shaft **104**.

[0025] The transmission **118** illustratively includes another conventional speed sensor **148** that is positioned and configured to produce a speed signal corresponding to the rotational speed of the transmission input shaft **124**, which is the same rotational speed as the turbine shaft **114**. The input shaft **124** of the transmission **118** is directly coupled to, or integral with, the turbine shaft **114**, and the speed sensor **148** may alternatively be positioned and configured to produce a speed signal corresponding to the rotational speed of the turbine shaft **114**. In any case, the speed sensor **148** is electrically connected to a transmission input shaft speed input, TIS, of the transmission control circuit **142** via a signal path **154**, and the transmission control circuit **142** is operable to process the speed signal produced by the speed sensor **148** in a conventional manner to determine the rotational speed of the turbine shaft **114**/transmission input shaft **124**.

[0026] The transmission **118** further includes yet another speed sensor **150** that is positioned and configured to produce a speed signal corresponding to the rotational speed of the output shaft **126** of the transmission **118**. The speed sensor **150** may be conventional, and is electrically connected to a transmission output shaft speed input, TOS, of the transmission control circuit **142** via a signal path **156**. The transmission control circuit **142** is configured to process the speed signal produced by the speed sensor **150** in a conventional manner to determine the rotational speed of the transmission output shaft **126**.

[0027] In the illustrated embodiment, the transmission **118** further includes one or more actuators configured to control various operations within the transmission **118**. For example, the electro-hydraulic system **138** described herein illustratively includes a number of actuators, e.g., conventional solenoids or other conventional actuators, that are electrically connected to a number, J, of control outputs, CP_1-CP_J, of the transmission control circuit **142** via a corresponding number of signal paths $\mathbf{72}_1$-$\mathbf{72}_J$, where J may be any positive integer as described above. The actuators within the electro-hydraulic system **138** are each responsive to a corresponding one of the control signals, CP_1-CP_J, produced by the transmission control circuit **142** on one of the corresponding signal paths $\mathbf{72}_1$-$\mathbf{72}_J$ to control the friction applied by each of the plurality of friction devices by controlling the pressure of fluid within one or more corresponding fluid passageway $\mathbf{140}_1$-$\mathbf{140}_J$, and thus control the operation, i.e., engaging and disengaging, of one or more corresponding friction devices, based on information provided by the various speed sensors **146**, **148**, and/or **150**.

[0028] The friction devices of the planetary gear system **122** are illustratively controlled by hydraulic fluid which is distributed by the electro-hydraulic system in a conventional manner. For example, the electro-hydraulic system **138** illustratively includes a conventional hydraulic positive displacement pump (not shown) which distributes fluid to the one or more friction devices via control of the one or more actuators within the electro-hydraulic system **138**. In this embodiment, the control signals, CP_1-CP_J, are illustratively analog friction device pressure commands to which the one or more actuators are responsive to control the hydraulic pressure to the one or more frictions devices. It will be understood, however, that the friction applied by each of the plurality of friction devices may alternatively be controlled in accordance with other conventional friction device control structures and techniques,

and such other conventional friction device control structures and techniques are contemplated by this disclosure. In any case, however, the analog operation of each of the friction devices is controlled by the control circuit **142** in accordance with instructions stored in the memory unit **144**.

[0029] In the illustrated embodiment, the system **100** further includes a drive unit control circuit **160** having an input/output port (I/O) that is electrically coupled to the drive unit **102** via a number, K, of signal paths **162**, wherein K may be any positive integer. The drive unit control circuit **160** may be conventional, and is operable to control and manage the overall operation of the drive unit **102**. The drive unit control circuit **160** further includes a communication port, COM, which is electrically connected to a similar communication port, COM, of the transmission control circuit **142** via a number, L, of signal paths **164**, wherein L may be any positive integer. The one or more signal paths **164** are typically referred to collectively as a data link. Generally, the drive unit control circuit **160** and the transmission control circuit **142** are operable to share information via the one or more signal paths **164** in a conventional manner. In one embodiment, for example, the drive unit control circuit **160** and transmission control circuit **142** are operable to share information via the one or more signal paths **164** in the form of one or more messages in accordance with a society of automotive engineers (SAE) J-1939 communications protocol, although this disclosure contemplates other embodiments in which the drive unit control circuit **160** and the transmission control circuit **142** are operable to share information via the one or more signal paths **164** in accordance with one or more other conventional communication protocols (e.g., from a conventional databus such as J1587 data bus, J1939 data bus, IES-CAN data bus, GMLAN, Mercedes PT-CAN).

[0030] Referring to FIG. **2**, a schematic representation or stick diagram illustrates one embodiment of a multi-speed transmission **200** according to the present disclosure. The transmission **200** includes an input shaft **202** and an output shaft **204**. The input shaft **202** and output shaft **204** can be disposed along the same axis or centerline of the transmission **200**. In another aspect, the different shafts can be disposed along different axes or centerlines. In a further aspect, the different shafts can be disposed parallel to one another, but along different axes or centerlines. Other aspect can be appreciated by one skilled in the art.

[0031] The transmission **200** can also include a plurality of planetary gearsets. In the illustrated embodiment of FIG. **2**, the transmission **200** includes a first planetary gearset **206**, a second planetary gearset **208**, a third planetary gearset **210**, and a fourth planetary gearset **212**. In this embodiment, the first planetary gearset **206**, the second planetary gearset **208**, and the fourth planetary gearset **212** can be referred to as a simple or compound planetary gearset. On the other hand, the third planetary gearset **210** can be referred to as an idler planet planetary gearset. In one example, an idler planet planetary gearset can include a sun gear, a ring gear, a carrier, and two sets of pinion gears. One set of pinion gears can be rotationally coupled with the sun gear and the other set of pinion gears can be rotationally coupled to the ring gear. Both sets of pinion gears are coupled to one another such that one pinion gear of the first set is rotationally coupled to one pinion gear of the second set. In this manner, power can be transferred through the sun or ring gear via each of the sets of pinion gears.

[0032] One or more of the plurality of planetary gearsets can be arranged in different locations within the transmission **200**, but in FIG. **2**, the planetary gearsets are aligned in an axial direction consecutively in sequence (i.e., first, second, third, and fourth between the input and output shafts).

[0033] The transmission **200** may also include a plurality of torque-transmitting or gearshifting mechanisms. For example, one or more of these mechanisms can include a clutch or brake. In one aspect, each of the plurality of mechanisms is disposed within an outer housing of the transmission **200**. In another aspect, however, one or more of the mechanisms may be disposed outside of the housing. Each of the plurality of mechanisms can be coupled to one or more of the plurality of planetary gearsets, which will be described further below.

[0034] In the embodiment of FIG. **2**, the transmission **200** can include a first torque-transmitting mechanism **260**, a second torque-transmitting mechanism **262**, and a third torque-transmitting mechanism **264** that are configured to function as brakes (e.g., each torque-transmitting mechanism is fixedly coupled to the outer housing of the transmission **200**). These brakes can be configured as shiftable-friction-locked disk brakes, shiftable friction-locked band brakes, shiftable form-locking claw or conical brakes, or any other type of known brake. The transmission **200** can include a fourth torque-transmitting mechanism **266**, a fifth torque-transmitting mechanism **268**, and a sixth torque-transmitting mechanism **270** that are configured to function as rotating clutches. These can be shiftable friction-locked multi-disk clutches, shiftable form-locking claw or conical clutches, wet clutches, or any other known form of a clutch. With these six torque-transmitting mechanisms, selective shifting of at least nine forward gears and at least one reverse gear is possible.

[0035] The transmission **200** of FIG. **2** may also include up to nine different shafts, which is inclusive of the input shaft **202** and output shaft **204**. Each of these shafts, designated as a first shaft **246**, a second shaft **248**, a third shaft **250**, a fourth shaft **252**, a fifth shaft **254**, a sixth shaft **256**, and a seventh shaft **258** are configured to be connected to one or more of the plurality of planetary gearsets or plurality of torque-transmitting mechanism between the input shaft **202** and output shaft **204**.

[0036] In FIG. **2**, the first planetary gearset **206** can include a first sun gear **214**, a first ring gear **216**, and a first carrier member **218** that rotatably supports a set of pinion gears **220**. The second planetary gearset **208** can include a second sun gear **222**, a second ring gear **224**, and a second carrier member **226** that rotatably supports a set of pinion gears **228**. The third planetary gearset **210**, i.e., the idler planet planetary gearset, can include a third sun gear **230**, a third ring gear **232**, and a third carrier member **234** that rotatably supports two sets of pinion gears **236**. One set of pinion gears **272** is rotationally coupled to the sun gear **230** and the other set of pinion gears **274** is rotationally coupled to the ring gear **232**. The fourth planetary gearset **212** can include a fourth sun gear **238**, a fourth ring gear **240**, and a fourth carrier member **242** that rotatably supports a set of pinion gears **244**.

[0037] The transmission **200** is capable of transferring torque from the input shaft **202** to the output shaft **204** in at least nine forward gears or ratios and at least one reverse gear or ratio. Each of the forward torque ratios and the reverse torque ratios can be attained by the selective engagement of one or more of the torque-transmitting mechanisms (i.e., torque-transmitting mechanisms **260**, **262**, **264**, **266**, **268**, and

270). Those skilled in the art will readily understand that a different speed ratio is associated with each torque ratio. Thus, at least nine forward speed ratios and at least one reverse speed ratio may be attained by transmission **200**. An example of the gear ratios that may be obtained using the embodiments of the present disclosure are also shown in FIG. **6**. Of course, other gear ratios are achievable depending on the gear diameter, gear tooth count and gear configuration selected.

[0038] As for the transmission **200**, kinematic coupling of the first planetary gearset **206** is shown in FIG. **2**. The first sun gear **214** is coupled to the input shaft **202** for common rotation therewith. The first ring gear **216** is coupled to the third shaft **250** for common rotation therewith. First pinion gears **220** are configured to intermesh with the first sun gear **214** and first ring gear **216**. First carrier member **218** is coupled for common rotation with the first shaft **246** and the second shaft **248**.

[0039] With respect to the second planetary gearset **208**, the second sun gear **222** is coupled to the fourth shaft **252** for common rotation therewith. The second ring gear **224** is coupled to the fifth shaft **254** for common rotation therewith. Second pinion gears **228** are configured to intermesh with the second sun gear **222** and second ring gear **224**, and the second carrier member **226** is coupled for common rotation with the third shaft **250** and the first ring gear **216**.

[0040] The third sun gear **230** of the third planetary gearset **210** is coupled to the fifth shaft **254** as well, and thus is disposed in common rotation with the second ring gear **224**. The third ring gear **232** is coupled to the output shaft **204** for common rotation therewith. Third pinion gears **236**, which include the first set of pinion gears **272** and the second set of pinion gears **274**, are configured to intermesh with the third sun gear **238** and third ring gear **240**, respectively. The third carrier member **234** is coupled for common rotation with the sixth shaft **256**.

[0041] The kinematic relationship of the fourth planetary gearset **212** is such that the fourth sun gear **238** is coupled to the fifth shaft **254** for common rotation therewith, and thus is disposed in common rotation with the third sun gear **230** and the second ring gear **224**. The fourth ring gear **240** is coupled to the seventh shaft **258** for common rotation therewith. The fourth pinions **244** are configured to intermesh with the fourth sun gear **238** and the fourth ring gear **240**. The fourth carrier member **242** is coupled to the input shaft **202** for common rotation therewith, and thus is disposed in common rotation with the first sun gear **214**.

[0042] With regards to the kinematic coupling of the six torque-transmitting mechanisms to the previously described shafts, the multiple speed transmission **200** of FIG. **2** provides that the first torque-transmitting mechanism **260** is arranged within the power flow between the first shaft **246** and the housing G of the transmission **200**. In this manner, the first torque-transmitting mechanism **260** is configured to act as a brake. Similarly, the second torque-transmitting mechanism **262** is arranged within the power flow between the fourth shaft **252** and the housing G of the transmission **200**. Thus, similar to the first torque-transmitting mechanism **260**, the second torque-transmitting mechanism **262** is configured to act as a brake. The third torque-transmitting mechanism **264** is arranged within the power flow between the sixth shaft **256** and the housing G of the transmission. Thus, in this embodiment of the transmission **200** three of the six torque-transmitting mechanism are configured to act as brakes and the other three torque-transmitting mechanisms are configured to act as clutches.

[0043] The fourth torque-transmitting mechanism **266** is arranged within the power flow between the input shaft **202** and the first shaft **246**. The fifth torque-transmitting mechanism **268** is arranged within the power flow between the second shaft **248** and the fifth shaft **254**. Moreover, the sixth torque-transmitting mechanism **270** is arranged within the power flow between the seventh shaft **258** and the output shaft **204**.

[0044] The kinematic couplings of the embodiment in FIG. **2** can further be described with respect to the selective engagement of the torque-transmitting mechanisms with respect to one or more components of the plurality of planetary gearsets. For example, in the transmission **200**, the first torque-transmitting mechanism **260** is selectively engageable to couple the first carrier **218** and the first shaft **246** to the housing G of the transmission **200**. The second torque-transmitting mechanism **262** is selectively engageable to couple the second sun gear **222** and the fourth shaft **252** to the housing G of the transmission **200**. Moreover, the third torque-transmitting mechanism **264** is selectively engageable to couple the third carrier member **234** and the sixth shaft **256** to the housing G of the transmission **200**.

[0045] The fourth torque-transmitting mechanism **266** is selectively engageable to couple the input shaft **202** to the first shaft **246** and first carrier member **218**. The fifth torque-transmitting mechanism **268** is selectively engageable to couple the first carrier member **218** and the second shaft **248** to the second ring gear **224**, third sun gear **230**, fourth sun gear **238**, and the fifth shaft **248**. Lastly, the sixth torque-transmitting mechanism **270** is selectively engageable to couple the fourth ring gear **240** and the seventh shaft **258** to the third ring gear **232** and the output shaft **204**.

[0046] Referring to FIG. **3**, a different embodiment of a multiple speed transmission **300** is shown. The transmission **300** includes an input shaft **302** and an output shaft **304**. The input shaft **302** and output shaft **304** can be disposed along the same axis or centerline of the transmission **300**. In another aspect, the different shafts can be disposed along different axes or centerlines. In a further aspect, the different shafts can be disposed parallel to one another, but along different axes or centerlines. Other aspect can be appreciated by one skilled in the art.

[0047] The transmission **300** can also include a plurality of planetary gearsets. In the illustrated embodiment of FIG. **3**, the transmission **300** includes a first planetary gearset **306**, a second planetary gearset **308**, a third planetary gearset **310**, and a fourth planetary gearset **312**. The first planetary gearset **306**, the second planetary gearset **308**, and the third planetary gearset **310** can be referred to as a simple or compound planetary gearset. The fourth planetary gearset **312**, however, is an idler planet planetary gearset similar to that shown in FIG. **2**. One or more of the plurality of planetary gearsets can be arranged in different locations within the transmission **300**, but for sake of simplicity and in this particular example only, the planetary gearsets are aligned in an axial direction consecutively in sequence (i.e., first, second, third, and fourth between the input and output shafts).

[0048] The transmission **300** may also include a plurality of torque-transmitting or gearshifting mechanisms. For example, one or more of these mechanisms can include a clutch or brake. In one aspect, each of the plurality of mecha-

nisms is disposed within an outer housing of the transmission **300**. In another aspect, however, one or more of the mechanisms may be disposed outside of the housing. Each of the plurality of mechanisms can be coupled to one or more of the plurality of planetary gearsets, which will be described further below.

[0049] In the embodiment of FIG. **3**, the transmission **300** can include a first torque-transmitting mechanism **360**, a second torque-transmitting mechanism **362**, and a third torque-transmitting mechanism **364** that are configured to function as brakes (e.g., each torque-transmitting mechanism is fixedly coupled to the outer housing of the transmission **300**). These brakes can be configured as shiftable-friction-locked disk brakes, shiftable friction-locked band brakes, shiftable form-locking claw or conical brakes, or any other type of known brake. The transmission **300** can include a fourth torque-transmitting mechanism **366**, a fifth torque-transmitting mechanism **368**, and a sixth torque-transmitting mechanism **370** that are configured to function as rotating clutches. These can be shiftable friction-locked multi-disk clutches, shiftable form-locking claw or conical clutches, wet clutches, or any other known form of a clutch. With these six torque-transmitting mechanisms, selective shifting of at least nine forward gears and at least one reverse gear is possible.

[0050] The transmission **300** of FIG. **3** may also include up to nine different shafts, which is inclusive of the input shaft **302** and output shaft **304**. Each of these shafts, designated as a first shaft **346**, a second shaft **348**, a third shaft **350**, a fourth shaft **352**, a fifth shaft **354**, a sixth shaft **356**, and a seventh shaft **358** are configured to be connected to one or more of the plurality of planetary gearsets or plurality of torque-transmitting mechanism between the input shaft **302** and output shaft **304**.

[0051] In FIG. **3**, the first planetary gearset **306** can include a first sun gear **314**, a first ring gear **316**, and a first carrier member **318** that rotatably supports a set of pinion gears **320**. The second planetary gearset **308** can include a second sun gear **322**, a second ring gear **324**, and a second carrier member **326** that rotatably supports a set of pinion gears **328**. The third planetary gearset **310** can include a third sun gear **330**, a third ring gear **332**, and a third carrier member **334** that rotatably supports a set of pinion gears **336**. The fourth planetary gearset **312**, i.e., the idler planet planetary gearset, can include a fourth sun gear **338**, a third ring gear **340**, and a third carrier member **342** that rotatably supports two sets of pinion gears **344**. One set of pinion gears **372** is rotationally coupled to the sun gear **338** and the other set of pinion gears **374** is rotationally coupled to the ring gear **340**.

[0052] The transmission **300** is capable of transferring torque from the input shaft **302** to the output shaft **304** in at least nine forward gears or ratios and at least one reverse gear or ratio. Each of the forward torque ratios and the reverse torque ratios can be attained by the selective engagement of one or more of the torque-transmitting mechanisms (i.e., torque-transmitting mechanisms **360**, **362**, **364**, **366**, **368**, and **370**). Those skilled in the art will readily understand that a different speed ratio is associated with each torque ratio. Thus, at least nine forward speed ratios and at least one reverse speed ratio may be attained by transmission **300**. An example of the gear ratios that may be obtained using the embodiments of the present disclosure are also shown in FIG. **6**. Of course, other gear ratios are achievable depending on the gear diameter, gear tooth count and gear configuration selected.

[0053] As for the transmission **300**, kinematic coupling of the first planetary gearset **306** is shown in FIG. **3**. The first sun gear **314** is coupled to the input shaft **302** for common rotation therewith. The first ring gear **316** is coupled to the third shaft **350** for common rotation therewith. First pinion gears **320** are configured to intermesh with the first sun gear **314** and first ring gear **316**. First carrier member **318** is coupled for common rotation with the first shaft **346** and the second shaft **348**.

[0054] With respect to the second planetary gearset **308**, the second sun gear **322** is coupled to the fourth shaft **352** for common rotation therewith. The second ring gear **324** is coupled to the fifth shaft **354** for common rotation therewith. Second pinion gears **328** are configured to intermesh with the second sun gear **322** and second ring gear **324**, and the second carrier member **326** is coupled for common rotation with the third shaft **350** and the first ring gear **316**.

[0055] The third sun gear **330** of the third planetary gearset **310** is coupled to the fifth shaft **354** as well, and thus is disposed in common rotation with the second ring gear **324**. The third ring gear **332** is coupled to the sixth shaft **356** for common rotation therewith. Third pinion gears **336** are configured to intermesh with the third sun gear **330** and third ring gear **332**, and the second carrier member **334** is coupled for common rotation with the output shaft **304**.

[0056] The kinematic relationship of the fourth planetary gearset **312** is such that the fourth sun gear **338** is coupled to the fifth shaft **354** for common rotation therewith, and thus is disposed in common rotation with the third sun gear **330** and the second ring gear **324**. The fourth ring gear **340** is coupled to the output shaft **304** for common rotation therewith. Lastly, the fourth pinion gears **344**, which include the first set of pinion gears **372** and the second set of pinion gears **374**, are configured to intermesh with the fourth sun gear **338** and fourth ring gear **340**, respectively. The fourth carrier member **342** is coupled for common rotation with the seventh shaft **358**.

[0057] With regards to the kinematic coupling of the six torque-transmitting mechanisms to the previously described shafts, the multiple speed transmission **300** of FIG. **3** provides that the first torque-transmitting mechanism **360** is arranged within the power flow between the first shaft **346** and the housing G of the transmission **300**. In this manner, the first torque-transmitting mechanism **360** is configured to act as a brake. Similarly, the second torque-transmitting mechanism **362** is arranged within the power flow between the fourth shaft **352** and the housing G of the transmission **300**. Thus, similar to the first torque-transmitting mechanism **360**, the second torque-transmitting mechanism **362** is configured to act as a brake. The third torque-transmitting mechanism **364** is arranged within the power flow between the sixth shaft **356** and the housing G of the transmission **300**. Thus, in this embodiment of the transmission **300** three of the six torque-transmitting mechanism are configured to act as brakes and the other three torque-transmitting mechanisms are configured to act as clutches.

[0058] The fourth torque-transmitting mechanism **366** is arranged within the power flow between the input shaft **302** and the first shaft **346**. The fifth torque-transmitting mechanism **368** is arranged within the power flow between the second shaft **348** and the fifth shaft **354**. Moreover, the sixth torque-transmitting mechanism **370** is arranged within the power flow between the seventh shaft **358** and the output shaft **304**.

[0059] The kinematic couplings of the embodiment in FIG. **3** can further be described with respect to the selective engagement of the torque-transmitting mechanisms with respect to one or more components of the plurality of planetary gearsets. For example, in the transmission **300**, the first torque-transmitting mechanism **360** is selectively engageable to couple the first carrier **318** and the first shaft **346** to the housing G of the transmission **300**. The second torque-transmitting mechanism **362** is selectively engageable to couple the second sun gear **322** and the fourth shaft **352** to the housing G of the transmission **300**. Moreover, the third torque-transmitting mechanism **364** is selectively engageable to couple the third ring gear **332** and the sixth shaft **356** to the housing G of the transmission **300**.

[0060] The fourth torque-transmitting mechanism **366** is selectively engageable to couple the input shaft **302** to the first shaft **346** and first carrier member **318**. The fifth torque-transmitting mechanism **368** is selectively engageable to couple the first carrier member **318** and the second shaft **348** to the second ring gear **324**, third sun gear **330**, fourth sun gear **338**, and the fifth shaft **348**. Lastly, the sixth torque-transmitting mechanism **370** is selectively engageable to couple the fourth carrier member **342** and the seventh shaft **358** to the third carrier member **334** and the output shaft **304**.

[0061] In FIG. **4**, another embodiment of a multiple speed transmission **400** is shown. The transmission **400** includes an input shaft **402** and an output shaft **404**. The input shaft **402** and output shaft **404** can be disposed along the same axis or centerline of the transmission **400**. In another aspect, the different shafts can be disposed along different axes or centerlines. In a further aspect, the different shafts can be disposed parallel to one another, but along different axes or centerlines. Other aspect can be appreciated by one skilled in the art.

[0062] The transmission **400** can also include a plurality of planetary gearsets. In the illustrated embodiment of FIG. **4**, the transmission **400** includes a first planetary gearset **406**, a second planetary gearset **408**, a third planetary gearset **410**, and a fourth planetary gearset **412**. The first planetary gearset **406**, the third planetary gearset **410**, and the fourth planetary gearset **412** can be referred to as a simple or compound planetary gearset. The second planetary gearset **408**, however, is an idler planet planetary gearset similar to that shown in FIGS. **2** and **3** and described above. One or more of the plurality of planetary gearsets can be arranged in different locations within the transmission **400**, but for sake of simplicity and in this particular example only, the planetary gearsets are aligned in an axial direction consecutively in sequence (i.e., first, second, third, and fourth between the input and output shafts).

[0063] The transmission **400** may also include a plurality of torque-transmitting or gearshifting mechanisms. For example, one or more of these mechanisms can include a clutch or brake. In one aspect, each of the plurality of mechanisms is disposed within an outer housing of the transmission **400**. In another aspect, however, one or more of the mechanisms may be disposed outside of the housing. Each of the plurality of mechanisms can be coupled to one or more of the plurality of planetary gearsets, which will be described further below.

[0064] In the embodiment of FIG. **4**, the transmission **400** can include a first torque-transmitting mechanism **460**, a second torque-transmitting mechanism **462**, and a third torque-transmitting mechanism **464** that are configured to function as brakes (e.g., each torque-transmitting mechanism is fixedly coupled to the outer housing of the transmission **400**). These brakes can be configured as shiftable-friction-locked disk brakes, shiftable friction-locked band brakes, shiftable form-locking claw or conical brakes, or any other type of known brake. The transmission **400** can include a fourth torque-transmitting mechanism **466**, a fifth torque-transmitting mechanism **468**, and a sixth torque-transmitting mechanism **470** that are configured to function as rotating clutches. These can be shiftable friction-locked multi-disk clutches, shiftable form-locking claw or conical clutches, wet clutches, or any other known form of a clutch. With these six torque-transmitting mechanisms, selective shifting of at least nine forward gears and at least one reverse gear is possible.

[0065] The transmission **400** of FIG. **4** may also include up to nine different shafts, which is inclusive of the input shaft **402** and output shaft **404**. Each of these shafts, designated as a first shaft **446**, a second shaft **448**, a third shaft **450**, a fourth shaft **452**, a fifth shaft **454**, a sixth shaft **456**, and a seventh shaft **458** are configured to be connected to one or more of the plurality of planetary gearsets or plurality of torque-transmitting mechanism between the input shaft **402** and output shaft **404**.

[0066] In FIG. **4**, the first planetary gearset **406** can include a first sun gear **414**, a first ring gear **416**, and a first carrier member **418** that rotatably supports a set of pinion gears **420**. The second planetary gearset **408**, i.e., the idler planet planetary gearset, can include a second sun gear **422**, a second ring gear **424**, and a second carrier member **426** that rotatably supports two sets of pinion gears **428**. The two sets of pinion gears **428** can include a first set of pinion gears **472** and a second set of pinion gears **474**. The number of pinion gears in each set can be any desirable number, but in at least one example the number of pinions in the first set is the same as the number of pinions in the second set.

[0067] The third planetary gearset **410** can include a third sun gear **430**, a third ring gear **432**, and a third carrier member **434** that rotatably supports a set of pinion gears **436**. The fourth planetary gearset **412** can include a fourth sun gear **438**, a third ring gear **440**, and a third carrier member **442** that rotatably supports a set of pinion gears **444**.

[0068] The transmission **400** is capable of transferring torque from the input shaft **402** to the output shaft **404** in at least nine forward gears or ratios and at least one reverse gear or ratio. Each of the forward torque ratios and the reverse torque ratios can be attained by the selective engagement of one or more of the torque-transmitting mechanisms (i.e., torque-transmitting mechanisms **460**, **462**, **464**, **466**, **468**, and **470**). Those skilled in the art will readily understand that a different speed ratio is associated with each torque ratio. Thus, at least nine forward speed ratios and at least one reverse speed ratio may be attained by transmission **400**. An example of the gear ratios that may be obtained using the embodiments of the present disclosure are also shown in FIG. **6**. Of course, other gear ratios are achievable depending on the gear diameter, gear tooth count and gear configuration selected.

[0069] As for the transmission **400**, kinematic coupling of the first planetary gearset **406** is shown in FIG. **4**. The first sun gear **414** is coupled to the input shaft **402** for common rotation therewith. The first ring gear **416** is coupled to the third shaft **450** for common rotation therewith. First pinion gears **420** are configured to intermesh with the first sun gear **414** and first

ring gear **416**. First carrier member **418** is coupled for common rotation with the first shaft **446** and the second shaft **448**.

[0070] With respect to the second planetary gearset **408**, the second sun gear **422** is coupled to the fourth shaft **452** for common rotation therewith. The second ring gear **424** is coupled to the third shaft **450** for common rotation therewith. Second pinion gears **428**, which include the first set of pinion gears **472** and the second set of pinion gears **474**, are configured to intermesh with the second sun gear **422** and second ring gear **424**, respectively. The second carrier member **426** is coupled for common rotation with the fifth shaft **454**.

[0071] The third sun gear **430** of the third planetary gearset **410** is coupled to the fifth shaft **454** as well, and thus is disposed in common rotation with the second carrier member **426**. The third ring gear **432** is coupled to the sixth shaft **456** for common rotation therewith. Third pinion gears **436** are configured to intermesh with the third sun gear **430** and third ring gear **432**, and the second carrier member **434** is coupled for common rotation with the output shaft **404**.

[0072] The kinematic relationship of the fourth planetary gearset **412** is such that the fourth sun gear **438** is coupled to the fifth shaft **454** for common rotation therewith, and thus is disposed in common rotation with the third sun gear **430** and the second carrier member **426**. The fourth ring gear **440** is coupled to the seventh shaft **458** for common rotation therewith. Lastly, the fourth pinion gears **444** are configured to intermesh with the fourth sun gear **438** and fourth ring gear **440**. The fourth carrier member **442** is coupled for common rotation with the input shaft **402**.

[0073] With regards to the kinematic coupling of the six torque-transmitting mechanisms to the previously described shafts, the multiple speed transmission **400** of FIG. **4** provides that the first torque-transmitting mechanism **460** is arranged within the power flow between the first shaft **446** and the housing G of the transmission **400**. In this manner, the first torque-transmitting mechanism **460** is configured to act as a brake. Similarly, the second torque-transmitting mechanism **462** is arranged within the power flow between the fourth shaft **452** and the housing G of the transmission **400**. Thus, similar to the first torque-transmitting mechanism **460**, the second torque-transmitting mechanism **462** is configured to act as a brake. The third torque-transmitting mechanism **464** is arranged within the power flow between the sixth shaft **456** and the housing G of the transmission **400**. Thus, in this embodiment of the transmission **400**, three of the six torque-transmitting mechanism are configured to act as brakes and the other three torque-transmitting mechanisms are configured to act as clutches.

[0074] The fourth torque-transmitting mechanism **466** is arranged within the power flow between the input shaft **402** and the first shaft **446**. The fifth torque-transmitting mechanism **468** is arranged within the power flow between the second shaft **448** and the fifth shaft **454**. Moreover, the sixth torque-transmitting mechanism **470** is arranged within the power flow between the seventh shaft **458** and the output shaft **404**.

[0075] The kinematic couplings of the embodiment in FIG. **4** can further be described with respect to the selective engagement of the torque-transmitting mechanisms with respect to one or more components of the plurality of planetary gearsets. For example, in the transmission **400**, the first torque-transmitting mechanism **460** is selectively engageable to couple the first carrier **418** and the first shaft **446** to the housing G of the transmission **400**. The second torque-transmitting mechanism **462** is selectively engageable to couple the second sun gear **422** and the fourth shaft **452** to the housing G of the transmission **400**. Moreover, the third torque-transmitting mechanism **464** is selectively engageable to couple the third ring gear **432** and the sixth shaft **456** to the housing G of the transmission **400**.

[0076] The fourth torque-transmitting mechanism **466** is selectively engageable to couple the input shaft **402** and the first sun gear **414** to the first shaft **446** and first carrier member **418**. The fifth torque-transmitting mechanism **468** is selectively engageable to couple the first carrier member **418** and the second shaft **448** to the second carrier member **426**, third sun gear **430**, fourth sun gear **438**, and the fifth shaft **454**. Lastly, the sixth torque-transmitting mechanism **470** is selectively engageable to couple the fourth ring gear **440** and the seventh shaft **458** to the third carrier member **434** and the output shaft **404**.

[0077] Referring now to the illustrated embodiment of FIG. **5** is another multiple speed transmission **500** capable of achieving at least nine forward speeds and at least one reverse speed. The transmission **500** includes an input shaft **502** and an output shaft **504**. The input shaft **502** and output shaft **504** can be disposed along the same axis or centerline of the transmission **500**. In another aspect, the different shafts can be disposed along different axes or centerlines. In a further aspect, the different shafts can be disposed parallel to one another, but along different axes or centerlines. Other aspect can be appreciated by one skilled in the art.

[0078] The transmission **500** can also include a plurality of planetary gearsets. In the illustrated embodiment of FIG. **5**, the transmission **500** includes a first planetary gearset **506**, a second planetary gearset **508**, a third planetary gearset **510**, and a fourth planetary gearset **512**. The first planetary gearset **506**, the third planetary gearset **510**, and the fourth planetary gearset **512** can be referred to as a simple or compound planetary gearset. The second planetary gearset **508**, however, is an idler planet planetary gearset similar to that shown in FIG. **4** and described above. One or more of the plurality of planetary gearsets can be arranged in different locations within the transmission **500**, but for sake of simplicity and in this particular example only, the planetary gearsets are aligned in an axial direction consecutively in sequence (i.e., first, second, third, and fourth between the input and output shafts).

[0079] The transmission **500** may also include a plurality of torque-transmitting or gearshifting mechanisms. For example, one or more of these mechanisms can include a clutch or brake. In one aspect, each of the plurality of mechanisms is disposed within an outer housing of the transmission **500**. In another aspect, however, one or more of the mechanisms may be disposed outside of the housing. Each of the plurality of mechanisms can be coupled to one or more of the plurality of planetary gearsets, which will be described further below.

[0080] In the embodiment of FIG. **5**, the transmission **500** can include a first torque-transmitting mechanism **560**, a second torque-transmitting mechanism **562**, and a third torque-transmitting mechanism **564** that are configured to function as brakes (e.g., each torque-transmitting mechanism is fixedly coupled to the outer housing of the transmission **500**). These brakes can be configured as shiftable-friction-locked disk brakes, shiftable friction-locked band brakes, shiftable form-locking claw or conical brakes, or any other type of known brake. The transmission **500** can include a fourth

torque-transmitting mechanism **566**, a fifth torque-transmitting mechanism **568**, and a sixth torque-transmitting mechanism **570** that are configured to function as rotating clutches. These can be shiftable friction-locked multi-disk clutches, shiftable form-locking claw or conical clutches, wet clutches, or any other known form of a clutch. With these six torque-transmitting mechanisms, selective shifting of at least nine forward gears and at least one reverse gear is possible.

[0081] The transmission **500** of FIG. **5** may also include up to nine different shafts, which is inclusive of the input shaft **502** and output shaft **504**. Each of these shafts, designated as a first shaft **546**, a second shaft **548**, a third shaft **550**, a fourth shaft **552**, a fifth shaft **554**, a sixth shaft **556**, and a seventh shaft **558** are configured to be connected to one or more of the plurality of planetary gearsets or plurality of torque-transmitting mechanism between the input shaft **502** and output shaft **504**.

[0082] In FIG. **5**, the first planetary gearset **506** can include a first sun gear **514**, a first ring gear **516**, and a first carrier member **518** that rotatably supports a set of pinion gears **520**. The second planetary gearset **508**, i.e., the idler planet planetary gearset, can include a second sun gear **522**, a second ring gear **524**, and a second carrier member **526** that rotatably supports two sets of pinion gears **528**. The two sets of pinion gears **528** can include a first set of pinion gears **572** and a second set of pinion gears **574**. The number of pinion gears in each set can be any desirable number, but in at least one example the number of pinions in the first set is the same as the number of pinions in the second set.

[0083] The third planetary gearset **510** can include a third sun gear **530**, a third ring gear **532**, and a third carrier member **534** that rotatably supports a set of pinion gears **536**. The fourth planetary gearset **512** can include a fourth sun gear **538**, a third ring gear **540**, and a third carrier member **542** that rotatably supports a set of pinion gears **544**.

[0084] The transmission **500** is capable of transferring torque from the input shaft **502** to the output shaft **504** in at least nine forward gears or ratios and at least one reverse gear or ratio. Each of the forward torque ratios and the reverse torque ratios can be attained by the selective engagement of one or more of the torque-transmitting mechanisms (i.e., torque-transmitting mechanisms **560**, **562**, **564**, **566**, **568**, and **570**). Those skilled in the art will readily understand that a different speed ratio is associated with each torque ratio. Thus, at least nine forward speed ratios and at least one reverse speed ratio may be attained by transmission **500**. An example of the gear ratios that may be obtained using the embodiments of the present disclosure are also shown in FIG. **6**. Of course, other gear ratios are achievable depending on the gear diameter, gear tooth count and gear configuration selected.

[0085] As for the transmission **500**, kinematic coupling of the first planetary gearset **506** is shown in FIG. **5**. The first sun gear **514** is coupled to the input shaft **502** for common rotation therewith. The first ring gear **516** is coupled to the third shaft **550** for common rotation therewith. First pinion gears **520** are configured to intermesh with the first sun gear **514** and first ring gear **516**. First carrier member **518** is coupled for common rotation with the first shaft **546** and the second shaft **548**.

[0086] With respect to the second planetary gearset **508**, the second sun gear **522** is coupled to the fifth shaft **554** for common rotation therewith. The second ring gear **524** is coupled to the third shaft **550** for common rotation therewith. Second pinion gears **528**, which include the first set of pinion gears **572** and the second set of pinion gears **574**, are configured to intermesh with the second sun gear **522** and second ring gear **524**, respectively. The second carrier member **526** is coupled for common rotation with the fourth shaft **552**.

[0087] The third sun gear **530** of the third planetary gearset **510** is coupled to the fifth shaft **554** as well, and thus is disposed in common rotation with the second sun gear **522**. The third ring gear **532** is coupled to the sixth shaft **556** for common rotation therewith. Third pinion gears **536** are configured to intermesh with the third sun gear **530** and third ring gear **532**, and the second carrier member **534** is coupled for common rotation with the output shaft **504**.

[0088] The kinematic relationship of the fourth planetary gearset **512** is such that the fourth sun gear **538** is coupled to the fifth shaft **554** for common rotation therewith, and thus is disposed in common rotation with the third sun gear **530** and the second sun gear **522**. The fourth ring gear **540** is coupled to the seventh shaft **558** for common rotation therewith. Lastly, the fourth pinion gears **544** are configured to intermesh with the fourth sun gear **538** and fourth ring gear **540**. The fourth carrier member **542** is coupled for common rotation with the input shaft **502**.

[0089] With regards to the kinematic coupling of the six torque-transmitting mechanisms to the previously described shafts, the multiple speed transmission **500** of FIG. **5** provides that the first torque-transmitting mechanism **560** is arranged within the power flow between the first shaft **546** and the housing G of the transmission **500**. In this manner, the first torque-transmitting mechanism **560** is configured to act as a brake. Similarly, the second torque-transmitting mechanism **562** is arranged within the power flow between the fourth shaft **552** and the housing G of the transmission **500**. Thus, similar to the first torque-transmitting mechanism **560**, the second torque-transmitting mechanism **562** is configured to act as a brake. The third torque-transmitting mechanism **564** is arranged within the power flow between the sixth shaft **556** and the housing G of the transmission **500**. Thus, in this embodiment of the transmission **500**, three of the six torque-transmitting mechanism are configured to act as brakes and the other three torque-transmitting mechanisms are configured to act as clutches.

[0090] The fourth torque-transmitting mechanism **566** is arranged within the power flow between the input shaft **502** and the first shaft **546**. The fifth torque-transmitting mechanism **568** is arranged within the power flow between the second shaft **548** and the fifth shaft **554**. Moreover, the sixth torque-transmitting mechanism **570** is arranged within the power flow between the seventh shaft **558** and the output shaft **504**.

[0091] The kinematic couplings of the embodiment in FIG. **5** can further be described with respect to the selective engagement of the torque-transmitting mechanisms with respect to one or more components of the plurality of planetary gearsets. For example, in the transmission **500**, the first torque-transmitting mechanism **560** is selectively engageable to couple the first carrier **518** and the first shaft **546** to the housing G of the transmission **500**. The second torque-transmitting mechanism **562** is selectively engageable to couple the second carrier member **526** and the fourth shaft **552** to the housing G of the transmission **500**. Moreover, the third torque-transmitting mechanism **564** is selectively engageable to couple the third ring gear **532** and the sixth shaft **556** to the housing G of the transmission **500**.

[0092] The fourth torque-transmitting mechanism **566** is selectively engageable to couple the input shaft **502** and the first sun gear **514** to the first shaft **546** and first carrier member **518**. The fifth torque-transmitting mechanism **568** is selectively engageable to couple the first carrier member **518** and the second shaft **548** to the second sun gear **522**, third sun gear **530**, fourth sun gear **538**, and the fifth shaft **554**. Lastly, the sixth torque-transmitting mechanism **570** is selectively engageable to couple the fourth ring gear **540** and the seventh shaft **558** to the third carrier member **534** and the output shaft **504**.

[0093] One aspect of the aforementioned and illustrated embodiments of FIGS. **2-5** is that each transmission architecture can be kinematically equivalent. In other words, the speed and torque at each node for a given input speed and input torque can be the same for each architecture. A node can be representative of a component within each planetary gearset. For instance, the first sun gear can represent a first node, the first carrier member represents a second node, and the first ring gear represents a third node. This carries forward with each of the second, third, and fourth planetary gearsets so that each of the embodiments can include at least twelve nodes.

[0094] As for the kinematic relationship between the different embodiments, for a given input speed and input torque, the speed and torque at each node is substantially equivalent (e.g., within a few RPMs and lb-ft) for each architecture. Thus, there is not a substantial difference between the speed and torque at the first sun gear, for example, regardless of the architectures illustrated in FIGS. **2-5**. The only difference therefore is the location of the idler planet planetary gearset within the architecture and the connections thereto.

[0095] As also previously described, each of the aforementioned embodiments is capable of transmitting torque from a respective input shaft to a respective output shaft in at least nine forward torque ratios and one reverse torque ratio. Referring to FIG. **6**, one example of a truth table **600** is shown representing a state of engagement of various torque transmitting mechanisms in each of the available forward and reverse speeds or gear ratios of the transmission illustrated in FIGS. **2-5**. It is to be understood that FIG. **6** is only one example of any number of truth tables possible for achieving at least nine forward ratios and one reverse ratio, and one skilled in the art is capable of configuring diameters, gear tooth counts, and gear configurations to achieve other ratios. In FIG. **6**, the first torque-transmitting mechanism (C**1**), the second torque-transmitting mechanism (C**2**), and the fifth torque-transmitting mechanism (C**5**) are brakes, whereas the third torque-transmitting mechanism (C**3**), the fourth torque-transmitting mechanism (C**4**), and the sixth torque-transmitting mechanism (C**6**) are clutches. Thus, in the embodiment of FIG. **2**, for example, the first torque-transmitting mechanism **260** is a brake and corresponds with C**1**, the second torque-transmitting mechanism **262** is a brake and corresponds with C**2**, and the third torque-transmitting mechanism **264** is a brake and corresponds with C**5** in FIG. **6**. Likewise, the fourth torque-transmitting mechanism **266** is a rotating clutch and corresponds with C**3**, the fifth torque-transmitting mechanism **268** is a rotating clutch and corresponds with C**4**, and the sixth torque-transmitting mechanism **270** is a rotating clutch and corresponds with C**6** in FIG. **6**. The torque-transmitting mechanisms of FIGS. **3-5** correspond with those shown in FIG. **6** in the same manner.

[0096] In the example of FIG. **6**, the reverse ratio (Rev) can be achieved by the selective engagement of the torque-transmitting mechanisms as set forth in the table. As shown, the first torque transmitting mechanism (C**1**), second torque-transmitting mechanism (C**2**), and fifth torque-transmitting mechanism (C**5**) are selectively engaged to establish the reverse ratio. Thus, in transmission **200** of FIG. **2**, the selective engagement of mechanisms **260**, **262**, and **264** can establish the reverse ratio, whereas in the transmission **300** of FIG. **3** the selective engagement of mechanisms **360**, **362**, and **364** can establish reverse. As shown, in the reverse ratio, the three brakes are engaged and the three clutches are disengaged.

[0097] In neutral (Neu), which is not illustratively shown in FIG. **6**, none of the torque-transmitting mechanisms carry torque. One or more of the torque-transmitting mechanisms, however, may be engaged in neutral but not carrying torque. For example, the first and second torque-transmitting mechanisms can be engaged in neutral, thereby resulting in the fifth torque-transmitting mechanism being disengaged between a shift between the reverse ratio and neutral.

[0098] A first forward ratio (shown as 1st) in the table of FIG. **6** is achieved by engaging two brakes and one clutch. In FIG. **2**, for example, the torque-transmitting mechanisms **262**, **268**, and **264** are engaged. Thus, as shown in FIG. **6**, when transitioning between neutral and the first forward range, C**2** and C**5** remain selectively engaged while a transition of selectively disengaging C**1** and selectively engaging C**4** is achieved. Referring to the embodiment of FIG. **2**, the second torque-transmitting mechanism **262** and the third torque-transmitting mechanism **264** remain engaged, while the transmission **200** transitions by selectively engaging the fifth torque-transmitting mechanism **268** and selectively disengaging the first torque-transmitting mechanism **260**.

[0099] In a second or subsequent forward ratio, indicated as 2nd in FIG. **6**, C**3**, C**4**, and C**5** are selectively engaged. Therefore, when transitioning between the first forward ratio and the second forward ratio, C**2** is released and C**3** is selectively engaged. Referring to the transmission **200** of FIG. **2**, the fourth torque-transmitting mechanism **266**, fifth torque-transmitting mechanism **268** and third torque-transmitting mechanism **264** are selectively engaged.

[0100] In a third or subsequent forward ratio, indicated as 3rd forward ratio in FIG. **6**, C**2**, C**3**, and C**5** are engaged. To transition from the second forward ratio to the third forward ratio, for example, C**2** is selectively engaged and C**4** is released. Referring to FIG. **2**, for example, the second torque-transmitting mechanism **262**, the fifth torque-transmitting mechanism **266**, and the third torque-transmitting mechanism **264** are selectively engaged.

[0101] In a fourth or the next subsequent forward ratio, indicated as 4th in FIG. **6**, C**2**, C**5**, and C**6** are engaged. Thus, to transition from the third forward ratio and upshift to the fourth forward ratio, C**6** is selectively engaged and C**3** is released. Referring to the illustrated embodiment of FIG. **2**, in the fourth forward ratio the second torque-transmitting mechanism **262**, the third torque-transmitting mechanism **264**, and the sixth torque-transmitting mechanism **270** are selectively engaged.

[0102] In a fifth or the next subsequent forward ratio, indicated as 5th in FIG. **6**, C**2**, C**3**, and C**6** are engaged. Thus, to transition from the fourth forward ratio and upshift to the fifth forward ratio, C**3** is selectively engaged and C**5** is released. As it related to the transmission **200** in FIG. **2**, the second torque-transmitting mechanism **262**, the fourth torque-transmitting mechanism **266**, and the sixth torque-transmitting mecha-

nism **270** are selectively engaged in the fifth forward ratio in accordance with the example of FIG. **6**.

[0103] In a sixth or the next subsequent forward ratio, indicated as 6th in FIG. **6**, C**3**, C**4**, and C**6** are engaged. Thus, to transition from the fifth forward ratio and upshift to the sixth forward ratio, C**4** is selectively engaged and C**2** is released. In regards to FIG. **2**, the fourth torque-transmitting mechanism **266**, the fifth torque-transmitting mechanism **268**, and the sixth torque-transmitting mechanism **270** of the transmission **200** are selectively engaged in this forward ratio.

[0104] In a seventh or the next subsequent forward ratio, indicated as 7th in FIG. **6**, C**2**, C**4**, and C**6** are engaged. Thus, to transition from the sixth forward ratio and upshift to the seventh forward ratio, C**2** is selectively engaged and C**3** is disengaged. Referring to FIG. **2**, in the seventh forward range according to the truth table of FIG. **6**, the second torque-transmitting mechanism **262** is selectively engaged along with the fifth torque-transmitting mechanism **268** and the sixth torque-transmitting mechanism **270**. During the transition, the fourth torque-transmitting mechanism **266** is selectively disengaged to achieve the seventh forward ratio.

[0105] In an eighth or the next subsequent forward ratio, indicated as 8th in FIG. **6**, C**1**, C**4**, and C**6** are engaged. Thus, to transition from the seventh forward ratio and upshift to the eighth forward ratio, C**1** is selectively engaged and C**2** is disengaged. As it relates to the embodiment of FIG. **2**, and similarly to the embodiments of FIGS. **3-5**, the first torque-transmitting mechanism **260**, the fifth torque-transmitting mechanism **268**, and the sixth torque-transmitting mechanism **270** are selectively engaged.

[0106] In a ninth or the next subsequent forward ratio, referred to as 9th in FIG. **6**, C**1**, C**2**, and C**6** are engaged. To transition therefore from the eighth forward ratio and upshift to the ninth forward ratio, C**2** is selectively engaged and C**4** is released. Referring to FIG. **2**, the second torque-transmitting mechanism **262** is selectively engaged and the fifth torque-transmitting mechanism **268** is released, and thus in the ninth forward ratio the first torque-transmitting mechanism **260**, the second torque-transmitting mechanism **262**, and the sixth torque-transmitting mechanism **270** are selectively engaged.

[0107] As previously described, the truth table **600** of FIG. **6** can be applicable to the shift transitions of the embodiments in FIGS. **3-5**. In this manner, the four illustrated embodiments in FIGS. **2-6** can provide for kinematically equivalent architectures that further include at least three simple planetary gearsets, at least one idler planet planetary gearset, six torque-transmitting mechanisms, and single transition shifts to achieve at least nine forward ratios and at least one reverse ratio.

[0108] The present disclosure contemplates that downshifts follow the reverse sequence of the corresponding upshift (as described above) in FIG. **6**, and several power-on skip-shifts that are single-transition are possible (e.g. from 1st to 3rd or 3rd to 1st) in related embodiments.

[0109] While exemplary embodiments incorporating the principles of the present disclosure have been disclosed hereinabove, the present disclosure is not limited to the disclosed embodiments. Instead, this application is intended to cover any variations, uses, or adaptations of the disclosure using its general principles. Further, this application is intended to cover such departures from the present disclosure as come within known or customary practice in the art to which this disclosure pertains and which fall within the limits of the appended claims.

1. A multiple speed transmission, comprising:
an input member;
an output member;
first, second, third and fourth planetary gearsets each having first, second and third members;
a plurality of interconnecting members each connected between at least one of the first, second, third, and fourth planetary gearsets and at least another of the first, second, third, and fourth planetary gearsets;
a first torque-transmitting mechanism selectively engageable to interconnect the second member of the first planetary gearset with a stationary member;
a second torque-transmitting mechanism selectively engageable to interconnect the first member of the second planetary gearset with the stationary member;
a third torque-transmitting mechanism selectively engageable to interconnect the second member of the third planetary gearset with the stationary member;
a fourth torque-transmitting mechanism selectively engageable to interconnect the second member of the first planetary gearset with the first member of the first planetary gearset and the input member;
a fifth torque-transmitting mechanism selectively engageable to interconnect the second member of the first planetary gearset with the third member of the second planetary gearset, the first member of the third planetary gearset, and the first member of the fourth planetary gearset; and
a sixth torque-transmitting mechanism selectively engageable to interconnect the third member of the fourth planetary gearset with the third member of the third planetary gearset and the output member;
wherein the torque transmitting mechanisms are selectively engageable in combinations of at least three to establish at least nine forward speed ratios and at least one reverse speed ratio between the input member and the output member.

2. The multiple speed transmission of claim **1**, wherein one of the first, second, third and fourth planetary gearsets comprises an idler planet planetary gearset.

3. The multiple speed transmission of claim **2**, wherein the third planetary gearset comprises the idler planet planetary gearset.

4. The multiple speed transmission of claim **1**, wherein the third member of the third planetary gearset is continuously interconnected with the output member.

5. The multiple speed transmission of claim **1**, wherein the input member is continuously interconnected with the first member of the first planetary gearset and the second member of the fourth planetary gearset.

6. The multiple speed transmission of claim **1**, wherein the plurality of interconnecting members includes a first interconnecting member continuously interconnecting the third member of the first planetary gearset with the second member of the second planetary gearset.

7. The multiple speed transmission of claim **1**, wherein the plurality of interconnecting members includes a second interconnecting member continuously interconnecting the third member of the second planetary gearset with the first member of the third planetary gearset and the first member of the fourth planetary gearset.

8. The multiple speed transmission of claim **1**, wherein the first, second, and third members of the first, second, third, and fourth planetary gearsets are each at least one of a sun gear, a ring gear, and a carrier member.

9. A multiple speed transmission, comprising:

an input member;

an output member;

first, second, third and fourth planetary gearsets each having first, second and third members;

a plurality of interconnecting members each connected between at least one of the first, second, third, and fourth planetary gearsets and at least another of the first, second, third, and fourth planetary gearsets;

a first torque-transmitting mechanism selectively engageable to interconnect the second member of the first planetary gearset with a stationary member;

a second torque-transmitting mechanism selectively engageable to interconnect the first member of the second planetary gearset with the stationary member;

a third torque-transmitting mechanism selectively engageable to interconnect the third member of the third planetary gearset with the stationary member;

a fourth torque-transmitting mechanism selectively engageable to interconnect the second member of the first planetary gearset with the first member of the first planetary gearset and the input member;

a fifth torque-transmitting mechanism selectively engageable to interconnect the second member of the first planetary gearset with the third member of the second planetary gearset, the first member of the third planetary gearset, and the first member of the fourth planetary gearset; and

a sixth torque-transmitting mechanism selectively engageable to interconnect the second member of the fourth planetary gearset with the second member of the third planetary gearset and the output member;

wherein the torque transmitting mechanisms are selectively engageable in combinations of at least three to establish at least nine forward speed ratios and at least one reverse speed ratio between the input member and the output member.

10. The multiple speed transmission of claim **9**, wherein the fourth planetary gearset comprises an idler planet planetary gearset.

11. The multiple speed transmission of claim **9**, wherein the input member is continuously interconnected with the first member of the first planetary gearset and the third member of the fourth planetary gearset.

12. The multiple speed transmission of claim **9**, wherein the plurality of interconnecting members includes a first interconnecting member continuously interconnecting the third member of the first planetary gearset with the second member of the second planetary gearset.

13. The multiple speed transmission of claim **9**, wherein the plurality of interconnecting members includes a second interconnecting member continuously interconnecting the third member of the second planetary gearset with the first member of the third planetary gearset and the first member of the fourth planetary gearset.

14. The multiple speed transmission of claim **9**, wherein the first, second, and third members of the first, second, third, and fourth planetary gearsets are each at least one of a sun gear, a ring gear, and a carrier member.

15. A multiple speed transmission, comprising:

an input member;

an output member;

first, second, third and fourth planetary gearsets each having first, second and third members;

a plurality of interconnecting members each connected between at least one of the first, second, third, and fourth planetary gearsets and at least another of the first, second, third, and fourth planetary gearsets;

a first torque-transmitting mechanism selectively engageable to interconnect the second member of the first planetary gearset with a stationary member;

a second torque-transmitting mechanism selectively engageable to interconnect the first member or second member of the second planetary gearset with the stationary member;

a third torque-transmitting mechanism selectively engageable to interconnect the third member of the third planetary gearset with the stationary member;

a fourth torque-transmitting mechanism selectively engageable to interconnect the second member of the first planetary gearset with the first member of the first planetary gearset and the input member;

a fifth torque-transmitting mechanism selectively engageable to interconnect the second member of the first planetary gearset with the first member of the third planetary gearset, the first member of the fourth planetary gearset, and the first member or second member of the second planetary gearset; and

a sixth torque-transmitting mechanism selectively engageable to interconnect the second member of the fourth planetary gearset with the second member of the third planetary gearset and the output member;

wherein the torque transmitting mechanisms are selectively engageable in combinations of at least three to establish at least nine forward speed ratios and at least one reverse speed ratio between the input member and the output member.

16. The multiple speed transmission of claim **15**, wherein the second planetary gearset comprises an idler planet planetary gearset.

17. The multiple speed transmission of claim **15**, wherein:

the input member is continuously interconnected with the first member of the first planetary gearset and the third member of the fourth planetary gearset; and

the output member is continuously interconnected with the second member of the third planetary gearset.

18. The multiple speed transmission of claim **15**, wherein the plurality of interconnecting members includes a first interconnecting member continuously interconnecting the third member of the first planetary gearset with the third member of the second planetary gearset.

19. The multiple speed transmission of claim **15**, wherein the plurality of interconnecting members includes a second interconnecting member continuously interconnecting the second member of the second planetary gearset with the first member of the third planetary gearset and the first member of the fourth planetary gearset.

20. The multiple speed transmission of claim **15**, wherein the plurality of interconnecting members includes a second interconnecting member continuously interconnecting the first member of the second planetary gearset with the first member of the third planetary gearset and the first member of the fourth planetary gearset.

* * * * *