AU9219124

(12) PATENT ABRIDGMENT (11) Document No. AU-B-19124/92
(19) AUSTRALIAN PATENT OFFICE (10) Acceptance No. 659374

(Modified Examination)

(54) Title
SYSTEM AND METHOD FOR RAPID VASCULAR DRUG DELIVERY

International Patent Classification(s)
(51)[5] A61M 005/20 A61M 005/315

(21) Application No. : 19124/92 (22) Application Date : 28.04.92

(87) PCT Publication Number : WO92/19296

(30) Priority Data

(31) Number (32) Date (33) Country
692674 29.04.91 US UNITED STATES OF AMERICA

(43) Publication Date : 21.12.92

(44) Publication Date of Accepted Application : 11.05.95

(71) Applicant(s)
GEORGE C. KRAMER

(72) Inventor(s)
GEORGE C KRAMER; WILLIAM BENJAMIN THOMAS; JAY WILSON

(74) Attorney or Agent
DAVIES COLLISON CAVE , 1 Little Collins Street, MELBOURNE VIC 3000

(57) Claim

1. A device for delivery of a drug in liquid form, which comprises a main housing having a front end and a rear end, a forward directed aperture on the front end of said main housing, a syringe body having a front end and a rear end, said syringe body being slideably positioned in said main housing, a needle having a central bore communicating with at least one opening proximate to a tip of said needle, said needle being attached to the front end of said syringe body, communicating with an interior of said syringe body and being positioned to extend through the aperture of said main housing, an actuation handle extending in telescoping fashion over the rear end of said main housing, a drive plunger extending from the rear ends of said syringe body and said main housing into said actuation handle, a drive spring capable of exerting an extending force between said drive plunger and said actuation handle, a needle return spring connected between the front end of said said main housing for engaging said drive plunger in position at the rear end of said syringe body, and a means placed on the front end of said main housing for locking said drive plunger in position and for unlocking said drive plunger from the rear end said syringe body causing said needle to be releasibly extended from the front end of said main housing.

19124 | 92

PCT ANNOUNCEMENT OF THE LATER PUBLICATION OF INTERNATIONAL SEARCH REPORT

INTERNATIONAL APPLICATION PUBLISHED UNDER THE PATENT COOPERATION TREATY (PCT)

(51) International Patent Classification 5 : A61M 5/20, 5/315 — A3

(11) International Publication Number: **WO 92/19296**

(43) International Publication Date: 12 November 1992 (12.11.92)

(21) International Application Number: PCT/US92/03506

(22) International Filing Date: 28 April 1992 (28.04.92)

(30) Priority data:
692,674 29 April 1991 (29.04.91) US

(71)(72) Applicant and Inventor: KRAMER, George, C. [US/US]; 5 Tiki Circle, Galveston, TX 77554 (US).

(72) Inventors: THOMAS, William, Benjamin ; 3134 Pullenham Way, Fremont, CA 94536 (US). WILSON, Jay ; 290 South Balsamina, Portola Valley, CA 94025 (US).

(74) Agent: DAFFER, Kevin, L.; P. O. Box 200637, Austin, TX 78720-0637 (US).

(81) Designated States: AT (European patent), AU, BE (European patent), CA, CH (European patent), DE (European patent), DK (European patent), ES (European patent), FR (European patent), GB (European patent), GR (European patent), IT (European patent), JP, KR, LU (European patent), MC (European patent), NL (European patent), SE (European patent).

Published
With international search report.

(88) Date of publication of the international search report:
21 January 1993 (21.01.93)

659374

(54) Title: SYSTEM AND METHOD FOR RAPID VASCULAR DRUG DELIVERY

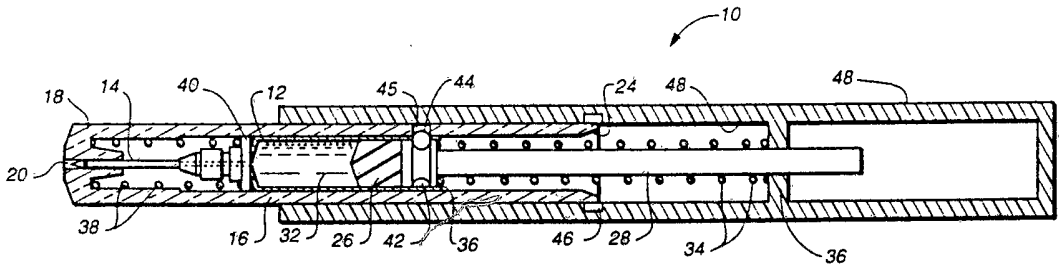

(57) Abstract

A device (10) for rapid vascular drug delivery, particularly through the adult sternum or the pediatric tibia, incorporates a cylindrical syringe body (12), fitted with a needle (14). The syringe body is held in a cylindrical main housing (16) having a front barrel (18) with an orifice (20) through which the needle (14) may be extended. A cylindrical actuation handle (22) fits over end (24) of the main housing (16) for sliding movement along the main housing. A syringe plunger (26) contacts drive plunger (28) and extends into the syringe body (12) from end (30) to confine liquid medication (32) in the syringe body (12). A main spring (34) extends between the drive plunger (28) and the actuation handle (22) to bias the actuation handle (22) in its extended position. A needle return spring (38) extends between the front barrel (18) and the syringe body (12) to bias the needle to its retracted position. The drive plunger (28) has an annular peripheral socket (42) for one or more lock balls (44) which engage one or more openings (45) on the main housing (16) to lock the drive plunger in position with respect to the syringe body (12). A mating annular lock ball trip pocket (46) is positioned on inside surface (48) of the actuation handle to allow the device (10) to be fired when the lock ball(s) in socket (42) reach the pocket (46).

SYSTEM AND METHOD FOR RAPID VASCULAR DRUG DELIVERY

BACKGROUND OF THE INVENTION

1. Field of the Invention:

The present invention relates generally to a system and method for automated, rapid, safe and effective delivery of drugs into the circulatory system. More particularly, it relates to such a system and method in which the drugs are delivered by infusion directly into the red marrow of the adult sternum or the pediatric tibia.

2. Description of the Prior Art:

There is a critical need for better and more rapid methods of vascular delivery of drugs. The development of new, life saving drugs and better knowledge of how specific drugs work has established that many drugs can prevent death or reduce morbidity if given in a timely manner. Unfortunately, most drugs need to be infused directly into the blood of the general circulation to be effective, and this is not always easily accomplished. Vascular injections and cannulations are procedures requiring professional skills and training that are usually only possessed by doctors, nurses and paramedics. Even these professionals have a significant failure rate and generate time delays for drug delivery in emergency conditions, when veins are often collapsed due to low

blood pressure, and several procedures need to be accomplished as soon as possible. Many other professionals and lay personnel, such as flight attendants, police, life guards and teachers, are trained in advanced first aid and cardiopulmonary resuscitation (CPR), but can not deliver drugs, due to lack of an effective method that does not require more medical training. Clearly, there is a need for a simple, better and more rapid means of drug delivery to aid both skilled professionals and para-professionals to expand the utility of life saving drugs.

It has long been known that the red marrow sinuses of bones are virtual non-collapsible veins. Fluids and drugs have been shown to enter the central circulation after intraosseous (IO) infusions as rapidly or even more rapidly than peripheral vein infusions. This IO method can be used to deliver drugs via the long bones of children, but in adults, only the sternum and bones of the pelvic girdle contain large red marrow spaces. Intraosseous infusions are well known and often used in children, but less well utilized in adults. However, most medical emergencies occur in adults.

Many special needles and devices have been made both to sample marrow and to infuse into the red marrow. All of these needles require substantial training and skill for their correct and safe use and take several seconds to minutes to use them properly. Examples of such prior art devices are disclosed in U.S. Patents 2,426,535, issued August 26, 1947 to Turkel; 2,773,500, issued January 26, 1955 to Young; 3,750,667, issued August 7, 1973 to Pshenichny et al; 4,969,870, issued November 13, 1990 to Kramer et al., and in the following articles: Tocantins, L.M. and O'Neill, J.F., "Infusion of Blood and Other Fluids into the General Circulation Via the Bone Marrow," **Surg. Gynecol. Obstet.**, 73, 281-287 (1941);

Turkel, H. and Bethell, F.H., "A New and Simple Instrument for Administration of Fluids Through Bone Marrow," **War Medicine**, 5, 222-225 (1944); Glaeser, P.W. and Losek, J.D. "Intraosseous Needles: New and Improved," **Pediat. Emerg. Care**, 4, 135-136 (1989); Sacchetti, A.D., Linkenheimer, R., Lieberman, M., Haviland, P., Kryszozak, L.B., "Intraosseous Drug Administration: Successful Resuscitation from Asystole," **Pediat. Emerg. Care**, 5, 97-98 (1989); Halvorsen, L., Bay, B.K., Perron, P.R. Gunther, R.A., Holcroft, J.W., Blaisdell, F.W., Kramer, G.C., "Evaluation of an Intraosseous Infusion Device for the Resuscitation of Hypovolemic Shock," **J. Traum.**, 30, 652-659 (1990). The above references describe manually inserted needles and techniques which require skill and training for proper use and necessitate many seconds to minutes in use. An automated needle system for delivery of drugs into the red marrow would have great utility.

A variety of auto-injection syringes for intramuscular or subcutaneous injections are also known in the art. Examples of such syringes are disclosed in the following U.S. Patents: 3,396,726, issued August 13, 1968 to Sarnoff; 3,712,301, issued January 23, 1973 to Sarnoff; 3,882,863, issued May 13, 1975 to Sarnoff et al.; 4,031,893, issued June 28, 1977 to Kaplan et al. However, these syringes are not designed, nor could they be effectively or safely used for injecting into the red marrow sinuses of bones, nor do they prevent needles used in the procedures from being exposed so that there is a danger of accidental needle punctures in use of these syringes.

SUMMARY OF THE INVENTION

Accordingly, it is an object of this invention to provide a device and method for very rapid, automated

and safe infusions of fluid and drugs in the circulatory system, e.g., into red marrow.

It is another object of the invention to provide such a device and method which will automatically puncture a bone containing the red marrow, place a needle into the red marrow, and infuse fluid into the circulatory system via the red marrow.

It is a further object of the invention to provide such a device and method which automatically covers the needle before and after use to prevent accidental needle punctures.

It is a still further object of the invention to provide such a device and method which can be used either with the adult sternum or the pediatric tibia.

It is yet another object of the invention to provide such a device and method that compresses the skin over the bone in use to reduce the anatomical variability of skin thickness.

It is yet a further object of the invention to provide such a device and method that imparts velocity to a needle and syringe component such that momentum rapidly places the needle through the skin and bone and into the marrow.

It is still another object of the invention to provide a needle which is adapted for use with such a device and method.

It is a still further object of the invention to provide such a needle which facilitates drug delivery into the marrow, yet prevents back flow of fluid out of the bone.

The attainment of these and related objects may be achieved through use of the novel device and method for rapid vascular drug delivery herein disclosed. In a first aspect of the invention, a device for rapid drug delivery in accordance with this invention has a main

housing with a front end. There is a forward directed aperture on the front end of the main housing. A syringe body has a front end and a rear end. The syringe body is slideably positioned in the main housing. A needle has a central bore communicating with at least one opening proximate to a tip of the needle. The needle is attached to the front end of the syringe body, communicates with an interior of said syringe body and is positioned to extend through the aperture of the main housing. A drive plunger extends from the rear end of the syringe body. A means on the main housing and engaging the drive plunger locks and unlocks the drive plunger in position at the rear end of the syringe body. A means is connected to the drive plunger for applying propelling force to the drive plunger to move the syringe body along the main housing in a first direction to extend the needle from the aperture when the device is pressed against a patient and to expel the drug from the syringe body into the patient. A means is connected to the syringe body to move the syringe body in a second direction opposite to the first direction for withdrawing the needle into the aperture when the device is no longer pressed against a patient.

In a second aspect of the invention, a device for delivery of a drug in liquid form to red marrow has a main housing with a front end. There is a forward directed aperture on the front end of the main housing. A syringe body has a front end and a rear end. The syringe body is slideably positioned in the main housing. A needle having a central bore communicating with at least one opening proximate to a tip of the needle is attached to the front end of the syringe body, communicates with an interior of said syringe body and is positioned to extend through the aperture of the main housing an appropriate distance for passing through a

patient's skin, penetrating a bone and entering the red marrow inside the bone. A means imparts a force to the syringe body and the needle to extend the needle through the aperture of the main housing the appropriate distance at a sufficient velocity to pass through the patient's skin, penetrate the bone and enter the red marrow. A means discharges the drug in liquid form from the syringe, through the needle and into the red marrow.

In a third aspect of the invention, a needle for use in a device for delivery of a drug in liquid form has a body with a taper along its length and a conical, orifice free tip. A central bore communicates with a plurality of orifices proximate to the tip. The plurality of orifices are positioned circumferentially on the needle at different distances from the tip.

In a fourth aspect of the invention, a method for delivering a drug in liquid form to red marrow includes positioning a syringe including a needle above a patient's skin at a location over a bone containing red marrow. Sufficient velocity is imparted to the syringe so that said needle will have sufficient momentum to pass through the patient's skin, penetrate the bone and enter the red marrow. The drug in liquid form is discharged from the syringe, through the needle and into the red marrow.

The attainment of the foregoing and related objects, advantages and features of the invention should be more readily apparent to those skilled in the art, after review of the following more detailed description of the invention, taken together with the drawings, in which:

BRIEF DESCRIPTION OF THE DRAWINGS

Figure 1 is a cross-section view of a first embodiment of a device for rapid vascular drug delivery of the invention.

Figures 2-5 are similar cross-section views of the device of Figure 1 at different stages in its use.

Figure 6 is an external perspective view of a second embodiment of a device for rapid vascular drug delivery of the invention.

Figure 7 is an exploded perspective view of the device of Figure 6.

Figures 8-12 are cross-section views of a portion of the device of Figures 6-7.

Figure 13 is an enlarged side view of a portion of the devices of Figures 1-12 in use.

DETAILED DESCRIPTION OF THE INVENTION

Turning now to the drawings, more particularly to Figure 1, there is shown a device 10 for rapid vascular drug delivery, particularly through the adult sternum or the pediatric tibia. The device 10 incorporates a cylindrical syringe body 12, fitted with a double side-holed pencil point needle 14. The syringe body is held in a cylindrical main housing 16 having a front barrel 18 with an orifice 20 through which the needle 14 may be extended. A cylindrical actuation handle 22 fits over end 24 of the main housing 16 for sliding movement along the main housing. A syringe plunger 26 contacts drive plunger 28 and extends into the syringe body 12 ~~from end 30~~ to confine liquid medication 32 in the syringe body 12. A main spring 34 extends between the drive plunger 28 and partition 36 on the actuation handle 22 to bias the actuation handle 22 in its extended position along the main housing 16 as shown in Figure 1. A needle return spring 38 extends between the front barrel 18 and a collar 40 on the syringe body 12 to bias the needle to its retracted position as shown in Figure 1. The main spring 34 exerts a stronger biasing force when compressed than the needle return spring 38. The drive plunger 28 has an annular peripheral socket 42 for one or more lock balls 44, which engage one or more openings 45 on the main

AUSTRALIAN PATENT OFFICE LS

housing 16 to lock the drive plunger in position with respect to the syringe body 12. A mating annular lock ball trip pocket 46 is positioned on inside surface 48 of the actuation handle to allow the device 10 to be fired when the lock ball(s) in socket 42 reach the pocket 46. In Figure 1, the device 10 is shown in its uncocked position.

In use, the device 10 is placed with the end of the front barrel 18 on the midline of the sternum at the second or third intercostal space, and then the device 10 is pushed against the sternum. Compression of the spring 34 behind the syringe body 12 occurs as the front barrel 18 is pushed toward the actuation handle 22 and generates a force that will be used for needle 14 advancement and drug 32 injection. When an adequate force has been stored in the spring 34, the front barrel 18 has been pushed back to a point so that the lock ball(s) 44 are able to enter the trip pocket 46, as shown in Figure 2. This entry releases the lock ball(s) 44, so that the main spring 34 is free to drive the syringe body 12 and the needle 14 forward with a force of about 25 to about 40 pounds until collar 40 rests against ridge 50, as shown in Figure 3. The needle 14 is extended from about 8 mm to about 16 mm in order to insure that side holes in the needle are in the red marrow. The main spring 34 then pushes the syringe plunger 26 forward to the position shown in Figure 4 to deliver the drug 32 through the extended needle 14 to the red in marrow in the sternum. Needle placement takes about 1/10th of a second, while drug delivery usually occurs in less than a second. Operation in this manner causes the syringe body 12 to reach a sufficient velocity so that the penetration of the needle 14 into the red marrow occurs

AUSTRALIAN PATENT OFFICE

in a single, rapid, uninterrupted motion due to momentum of the syringe body 12 and needle 14. Relying on momentum in this manner means that a smaller diameter needle can be used than would be required if the penetration resulted from application of penetrating force on the needle while it was at rest against the skin or bone. Upon completion of drug delivery, the operator releases the pressure against the sternum, and the needle retraction spring 38 withdraws the needle 14 into the barrel 18 of the main housing 16 to the position shown in Figure 5.

Figures 6-12 show another device 100 for the rapid delivery of a drug to the red marrow. The device 100 incorporates a locking, cylindrical protective cover 102 over front barrel 104 to insure that needle 14 is never exposed except when the device 100 is both pressed against the patient's body and actuated. A cover return spring 106 is positioned between the protective cover 102 and shoulder 108 on cylindrical main housing 110 of the device. The protective cover 102 has an end 112 that extends into actuation handle 114 of the device 100. End 112 is equipped with a tab locking mechanism 116 that, once actuated, prevents the protective cover 102 from being moved from its extended position as shown in Figure 8 to its withdrawn position, against the barrel 104, as shown in Figure 9. The locking mechanism 116 consists of two parts: a lock 118 circumferentially positioned around the end 112 between the protective cover 102 and the actuation handle 114, and a sleeve 120 concentrically positioned over the lock 118. The lock 118 has a plurality of spring tabs 122 extending rearward of the actuation handle 114 from a cylindrical base 124. The sleeve 120 has a plurality of projections 126, which are not springs, extending rearward beyond the tabs 122 from a similar cylindrical base 128. With the parts of

the device 100 in the positions shown in Figure 8, prior to use of the device 100, the cylindrical base 128 of the sleeve 120 rests over the spring fingers 122 of the lock 118, holding them down. A sealing membrane 134 is provided inside the barrel 104, over orifice 136, to protect the needle 14 prior to use of the device.

In use of the device 100, with the spring fingers 122 in their down position, the protective cover 102 is free to retract against the barrel 104 to the position shown in Figure 9, when the protective cover 102 is pressed downward against, e.g., the adult sternum or the pediatric tibia. As the protective cover 102 moves toward the barrel 104, the projections 126 of the sleeve 120 engage shoulder 130 of the actuating handle 114, so that the base 128 of the sleeve 120 is pushed down over the base 124 of the lock 118, allowing the spring fingers 122 of the lock 118 to spring outward, as shown in Figure 9. Continued downward pressure of the device 100 on the adult sternum or pediatric tibia moves the protective cover 102 and the barrel 104 into the actuating handle 114, as shown in Figure 10, until the main body 108 and the actuating handle reach the firing position, as in the Figures 1-5 embodiment. At that time, firing occurs, the needle 14 is extended into the sternum or tibia, and the drug is ejected into the red marrow through the needle 14, as shown in Figure 11 in the same manner as in the Figures 1-5 embodiment. When the device 100 is no longer pressed against the patient, the protective cover 102 is returned to its original position by the force of spring 106, as shown in Figure 12. Because the spring tabs 122 have sprung outward, they engage shoulder 132, forward of the shoulder 130 on the actuating handle, to lock the protective cover 102 over the needle 14. Thus, the needle is never exposed except when the device 100 is actually pressed against the patient, and the

needle 14 cannot be re-exposed after actuation, even if the device is again pressed against the patient or any object. In addition to the main spring 34, a secondary spring 138, separated from the main spring by member 140, is provided to ensure that there is still a spring force urging the needle 14 forward when it is fully extended. Except as shown and described, the construction and operation of the Figures 6-10 embodiment of the invention is the same as that of the Figures 1-5 embodiment.

Figure 13 shows details of the needle 14 used in the devices 10 and 100. The needle 14 has a slight taper along its length toward a conical, orifice free tip 150. The taper promotes a good seal between the needle 14 and bone 156. The tip 150 of the needle 14 is free of an orifice because orifices located there would tend to clog during penetration of the bone 156. Orifices 158 are located behind the conical tip 150 and communicate with a central bore 160 extending the length of the needle 14 to communicate with the reservoir of drug 32 (Figure 1). The orifices 158 are staggered around the circumference of the needle 14 and connect to slits 162 extending vertically along the side of the needle. This configuration and placement of the orifices 158 and the slits 162 allow discharge of the drug 32 from an orifice 158, even if it is partially blocked by a tissue globule 164 in the red marrow 166.

Examples of drugs that can be life saving for specific medical emergencies if administered into the central circulation in a timely manner, and hence, candidates for packaging in the devices 10 and 100, are shown in the following table:

Drug	Medical Emergency
Epinephrine or related compounds	Cardiac arrest; Anaphylactic shock
Naloxone	Narcotic overdose
Atropine sulfate	Organophosphate poisoning
Benadryl	Anaphylactic shock
TPA (tissue plasminogen activator)	Myocardial infarction
Valium	Convulsion/seizures
Sodium pentobarbital	Convulsion/seizures
Lidocaine	Cardiac arrhythmias

All of the above medical emergencies are and can be life threatening. The vascular delivery of the above drugs can be life saving. Even a few seconds delay in therapy can be a matter of life or death in the above emergencies. The described invention can administer these drugs into the central circulation, often in less than 1 or 2 seconds, can be safely and effectively performed by a lay person with minimal training and, overall, offers a safe, effective, automated and extremely rapid means to treat medical emergencies.

Because momentum is used to advance the needle through the cortical bone and into the red marrow, even a small gauge needle, such as a 20 to 25 gauge simple pencil point with multiple sideholes could be properly placed. Because the effective dose of most of the previously listed drugs could be carried in exceedingly small volumes, such as 0.1 to 0.2 ml or less, such a small gauged needle could be used for rapid drug delivery. Alternatively, a larger needle (12 to 18 gauge), either a simple pencil point or the design previously described could be used to administer rapidly

1.0 to 5.0 ml of fluid. The invention and these needles and drugs can be delivered effectively into circulation in as short a time as 1 to 2 seconds or less.

While the invention has been shown in two preferred forms, various modifications of it could be made. For example, the device could be constructed so that it is cocked or loaded prior to placing it in contact with the patient, and merely fired after it is pressed against the patient with a suitable pressure. The devices 10 and 100 have been shown and described as configured for IO infusion. The same principle of an automatic syringe that is automatically spring loaded for injection by pressing against the patient could be adapted to an automatic syringe for subcutaneous or intramuscular injection as well.

It should now be readily apparent to those skilled in the art that a device and method for automated, safe and effective delivery of drugs into the circulatory system has been provided. The device and method automatically punctures a bone containing red marrow, places a needle into the red marrow, and infuses fluid into the circulatory system via the red marrow. The device and method automatically covers the needle before and after use to prevent accidental needle punctures. The device and method can be used either with the adult sternum or the pediatric tibia. The needle of the device is specially adapted for use with such a device and method.

It should further be apparent to those skilled in the art that various changes in form and details of the invention as shown and described may be made. It is intended that such changes be included within the spirit and scope of the claims appended hereto.

THE CLAIMS DEFINING THE INVENTION ARE AS FOLLOWS:

1. A device for delivery of a drug in liquid form, which comprises a main housing having a front end and a rear end, a forward directed aperture on the front end of said main housing, a syringe body having a front end and a rear end, said syringe body being slideably positioned in said main housing, a needle having a central bore communicating with at least one opening proximate to a tip of said needle, said needle being attached to the front end of said syringe body, communicating with an interior of said syringe body and being positioned to extend through the aperture of said main housing, an actuation handle extending in telescoping fashion over the rear end of said main housing, a drive plunger extending from the rear ends of said syringe body and said main housing into said actuation handle, a drive spring capable of exerting an extending force between said drive plunger and said actuation handle, a needle return spring connected between the front end of said said main housing for engaging said drive plunger in position at the rear end of said syringe body, and a means placed on the front end of said main housing for locking said drive plunger in position and for unlocking said drive plunger from the rear end said syringe body causing said needle to be releasibly extended from the front end of said main housing.

2. The device for delivery of a drug in liquid form of Claim 1 in which said means for engaging said drive plunger in position at the rear end of said syringe body comprises an annular pocket on said drive plunger for holding at least one lock ball and at least one opening in said main housing into which said at least one lock ball extends.

AUSTRALIAN PATENT OFFICE LS

PCT/US 92/03506
03 Rec'd PCT/PTO 20 NOV 1992

3. The device for delivery of a drug in liquid form of Claim 2 in which said means for unlocking said drive plunger from the rear end of said syringe body comprises at least one receptacle positioned to allow said at least one lock ball to extend into said at least one receptacle when said at least one opening is opposite said at least one receptacle.

4. The device for delivery of a drug in liquid form of Claim 1 additionally ~~comprises~~ comprising a protective cover having a front end and a rear end, said protective cover being positioned over the front end of said main housing, the front end of said protective cover extending beyond the front end of said main housing at least a distance equal to the distance said needle extends through the aperture of said main housing when said device is operated, said protective cover having a corresponding aperture to the aperture of said main housing, the rear end of said protective cover extending into said actuation handle, said protective cover being initially movable rearward along said main housing in telescoping fashion over the front end of said main housing, and a locking mechanism on said protective cover for preventing said protective cover from being moved rearward along said main housing again, after initially being moved rearward along said main housing.

5. The device for delivery of a drug in liquid form of Claim 4 in which said locking mechanism comprises a lock having a plurality of spring tabs extendable outward from said protective cover to engage said actuation handle and a sleeve positioned over said spring tabs to hold them from extending outward until said protective cover is initially moved rearward along said main housing.

6. The device for delivery of a drug in liquid form of Claim 1 in which said needle has a taper along its

AUSTRALIAN PATENT OFFICE LS

length, a conical, orifice free tip, and said at least one opening comprises a plurality of orifices positioned circumferentially on said needle at different distances from said tip.

7. The device for delivery of a drug in liquid form of Claim 6 in which each of said plurality of orifices is connected to one of a like plurality of substantially vertical slits on said needle.

8. A device for delivery of a drug in liquid form to red marrow, which comprises a main housing having a front end and a rear end, a forward directed aperture on the front end of said main housing, a syringe body having a front end and a rear end, said syringe body being slideably positioned in said main housing, a needle having a central bore communicating with at least one opening proximate to a tip of said needle, said needle being attached to the front end of said syringe body, communicating with an interior of said syringe body and being positioned to extend through the aperture of said main housing with a force exceeding 25 pounds such that the needle is capable of being releasibly extended with sufficient momentum to penetrate a patient's skin and enter the red marrow inside a bone and to rapidly discharge the drug in liquid form from the syringe, through the needle and into the red marrow.

9. The device for delivery of a drug in liquid form to red marrow of Claim 8 further comprising a drive plunger capable of being engaged with the rear end of said syringe body, a drive spring attached to said plunger to drive said needle into the red marrow and to subsequently drive said plunger from the rear end of said syringe body.

10. The device for delivery of a drug in liquid form to red marrow of Claim 8 in which said means for discharging the drug in liquid form comprises a syringe plunger

AUSTRALIAN PATENT OFFICE LS

engaged by said drive plunger.

11. The device for delivery of a drug in liquid form to a red marrow of Claim 8 in which said needle has a taper along its length, a conical, orifice free tip, and said at least one opening comprises a plurality of orifices positioned circumferentially on said needle at different distances from said tip.

12. The device for delivery of a drug in liquid form to a red marrow of Claim 11 in which each of said plurality of orifices is connected to one of a like plurality of substantially vertical slits on said needle.

13. A device for delivery of a drug in liquid form, which comprises a main housing having a front end and a rear end, a forward directed aperture on the front end of said main housing, a syringe body having a front end and a rear end, said syringe body being slidably positioned in said main housing, a needle having a central bore communicating with at least one opening proximate to a tip of said needle, said needle being attached to the front end of said syringe body, communicating with an interior of said syringe body and being positioned to extend through the aperture of said main housing, a drive plunger extending from the rear end of said syringe body, a means on said main housing and engaging said drive plunger to lock and unlock said drive plunger in position at the rear end of said syringe body, a means connected to said drive plunger for applying propelling force to said drive plunger which exceeds 25 pounds to move said syringe body along said main housing in a first direction to releasibly extend said needle approximately 8 mm to 15 mm from the aperture when said device is pressed against a patient and to expel the drug from said syringe body into the patient, and a means connected to said syringe body to move said syringe body in a second direction opposite to the first

AUSTRALIAN PATENT OFFICE LS

direction for withdrawing said needle into said aperture when said device is no longer pressed against a patient.

14. The device for delivery of a drug in liquid form of Claim 13 additionally comprising a protective cover having a front end, said protective cover being positioned over the front end of said main housing, the front end of said protective cover extending beyond the front end of said main housing at least a distance equal to the distance said needle extends through the aperture of said main housing when said device is operated, said protective cover having a corresponding aperture to the aperture of said main housing, said protective cover being initially movable rearward along said main housing in telescoping fashion over the front end of said main housing, a locking mechanism on said protective cover for preventing said protective cover from being moved rearward along said main housing again, after initially being moved rearward along said main housing, and a means for biasing said protective cover forward in extended position beyond the front end of said main housing.

15. The device for delivery of a drug in liquid form of Claim 13 in which said means for applying propelling force to said drive plunger and to expel the drug from said syringe body comprises a first spring, and said means to move said syringe body in a second direction comprises a second spring having a lesser spring force when compressed than said first spring.

DATED this 28th day of September, 1994.

GEORGE C. KRAMER

By his Patent Attorneys

DAVIES COLLISON CAVE

AUSTRALIAN PATENT OFFICE LS

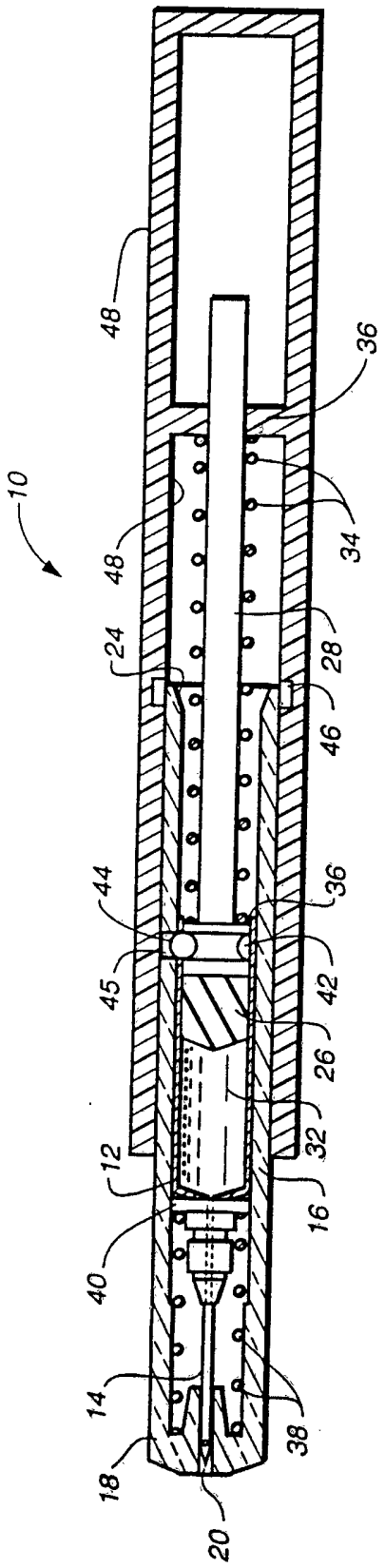
10
48
36
48
34
24
28
46
44
36
45
42
26
32
12
16
40
14
38
18
20

FIG._1

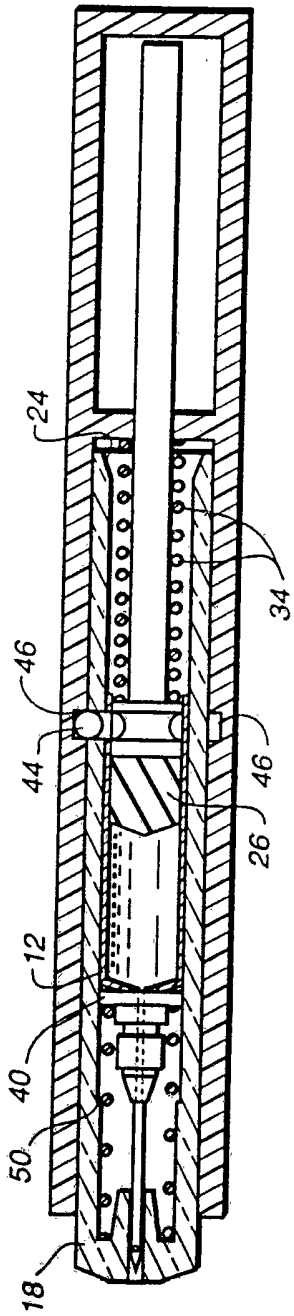
24
34
46
44
46
26
12
40
50
18

FIG._2

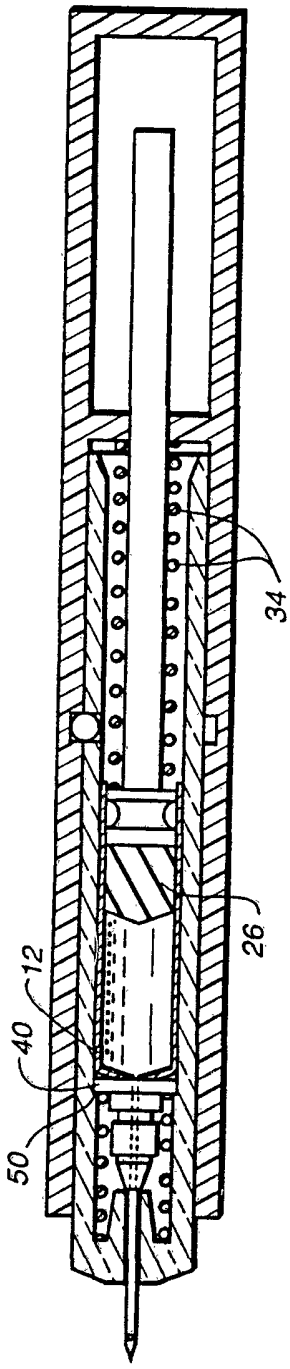

FIG._3

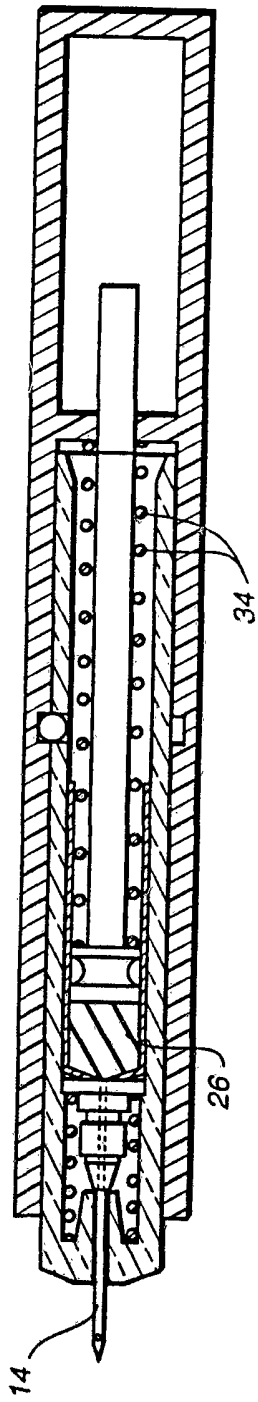

FIG._4

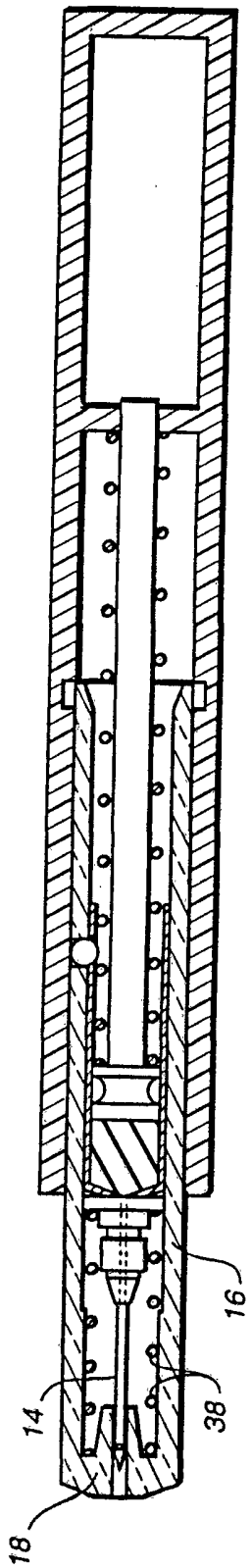

FIG._5

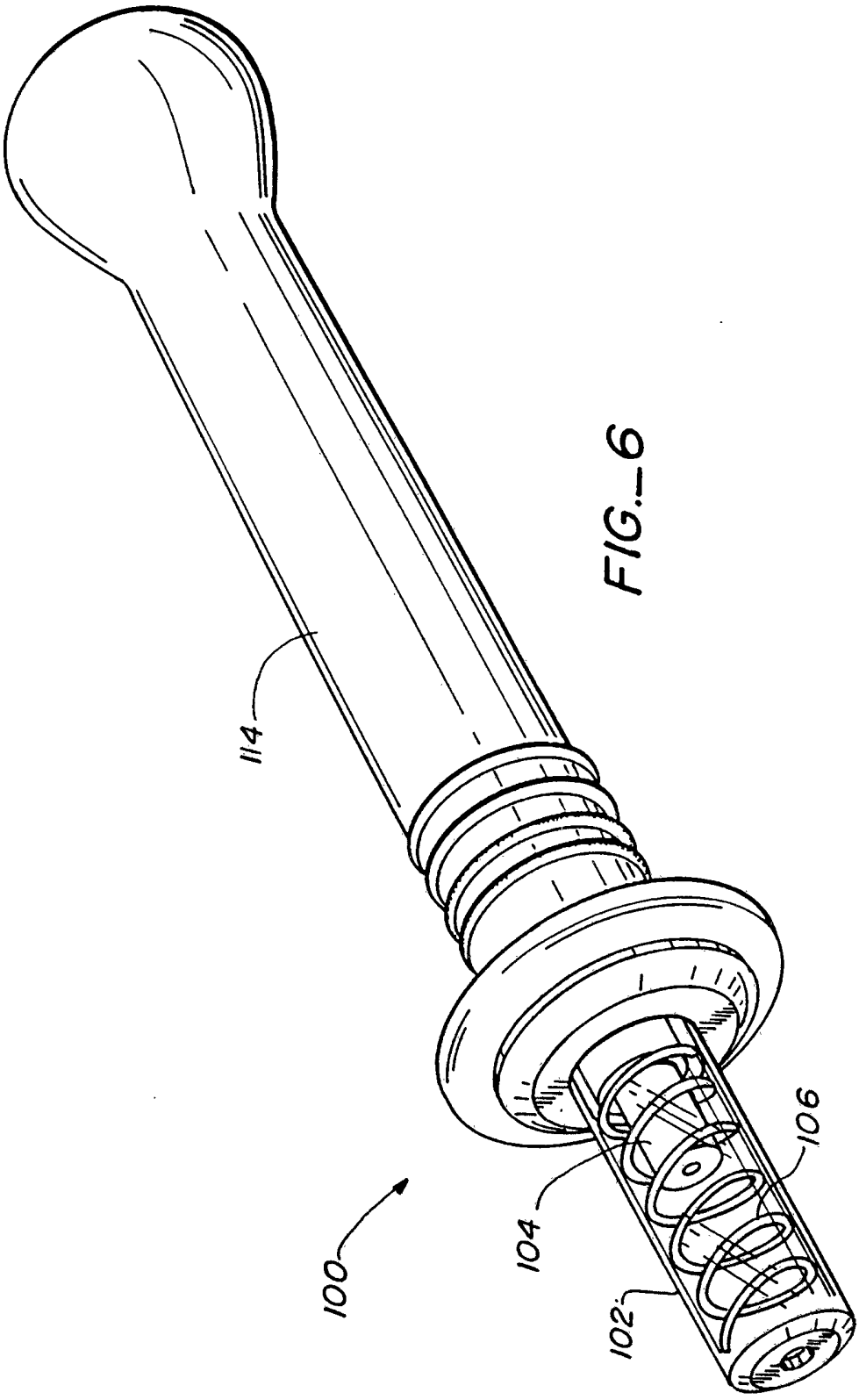

FIG._6

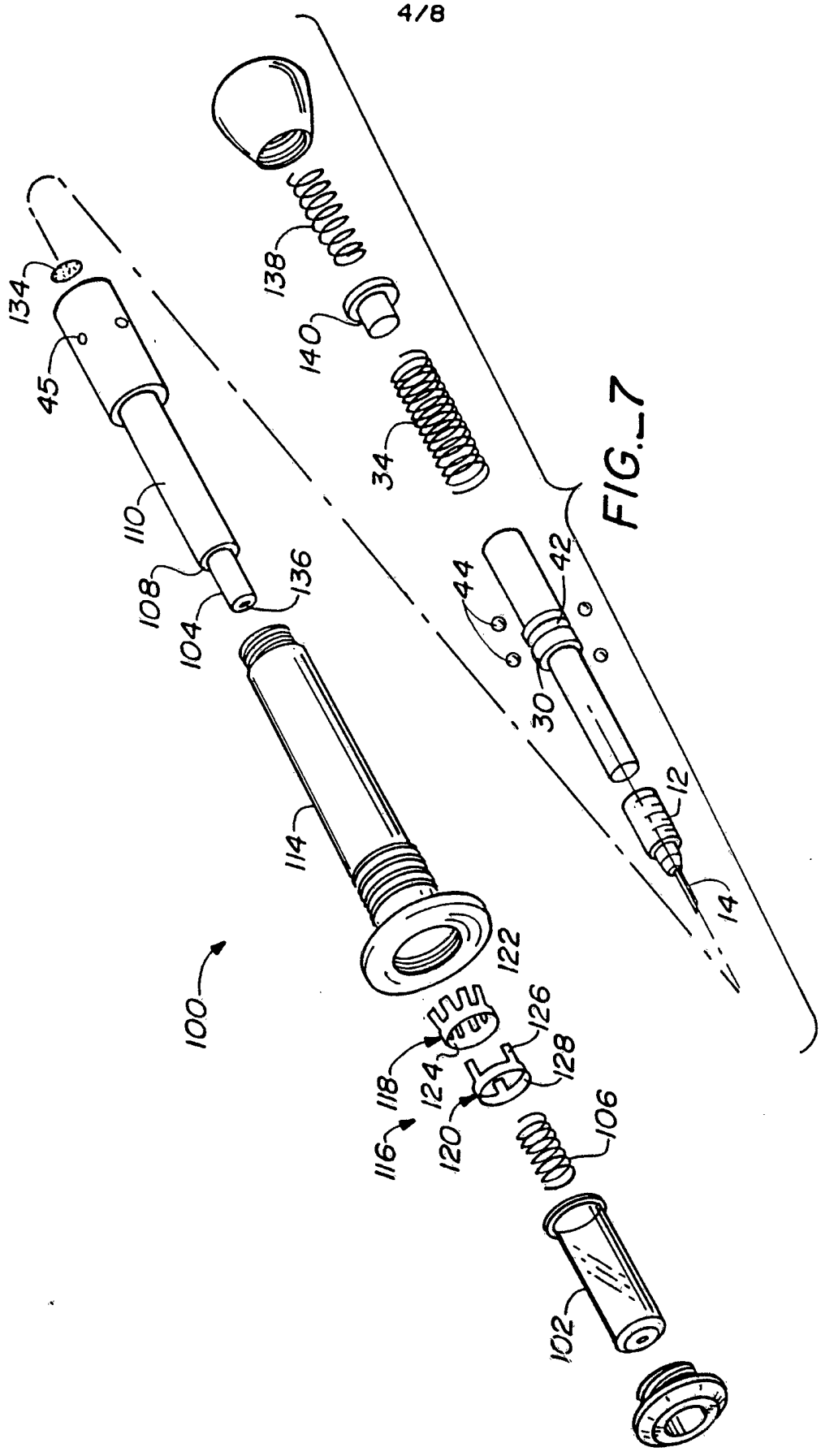
134
45
110
108
104
136
138
140
34
114
122
100
118
124
126
128
116
120
106
102
44
42
30
12
14

FIG._7

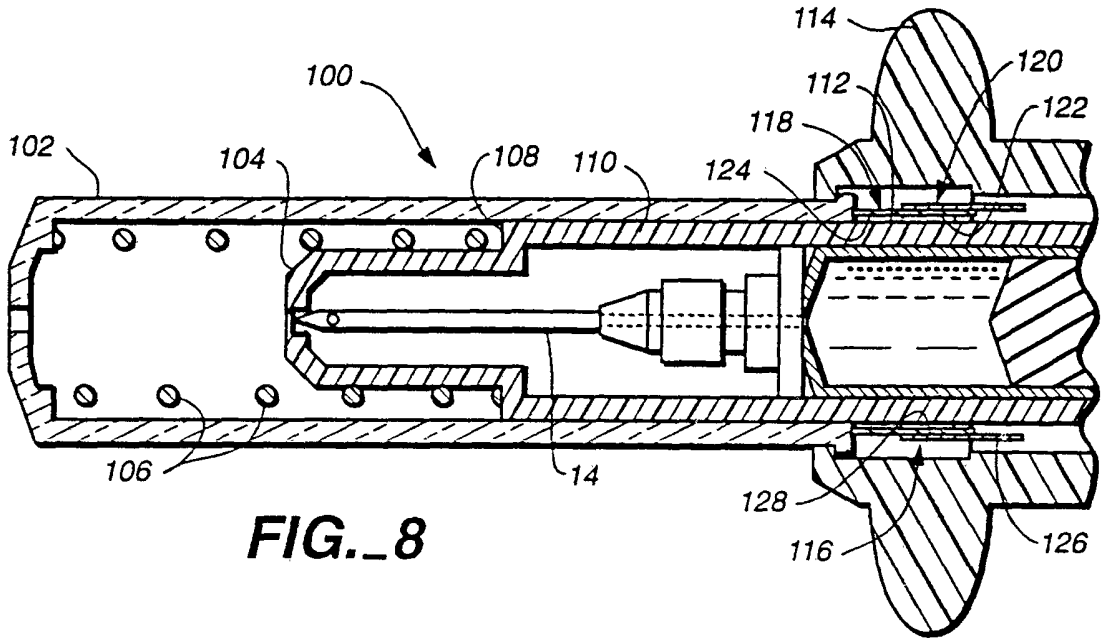
114
120
100
112
122
118
102
104
108
110
124
106
14
128
116
126

FIG._8

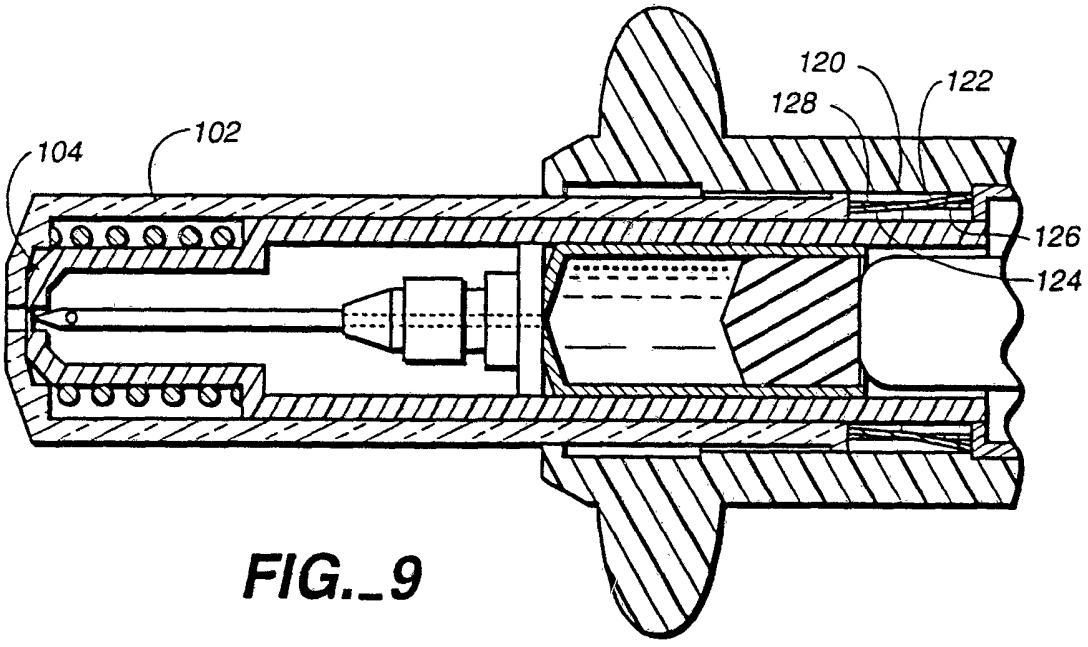
120
122
128
102
104
126
124

FIG._9

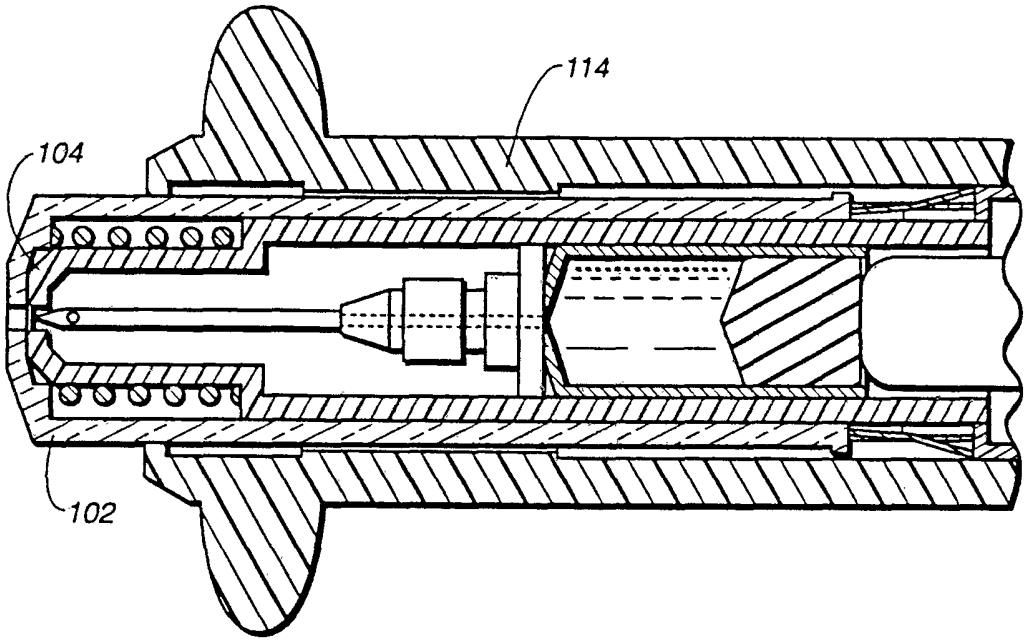

FIG._10

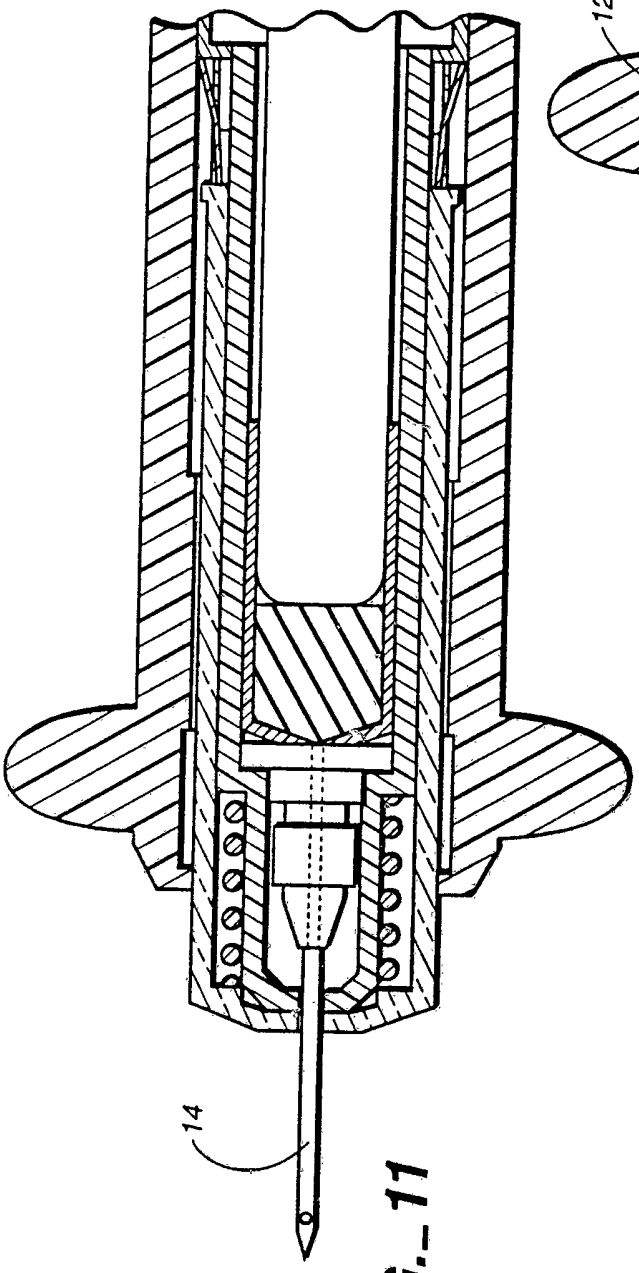

FIG._11

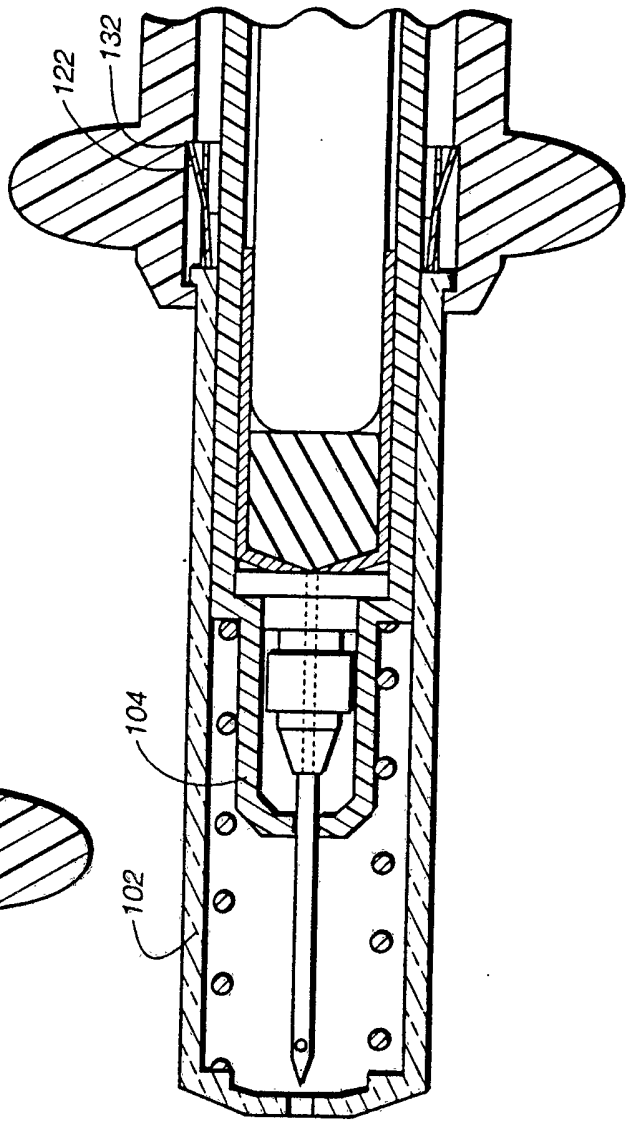

FIG._12

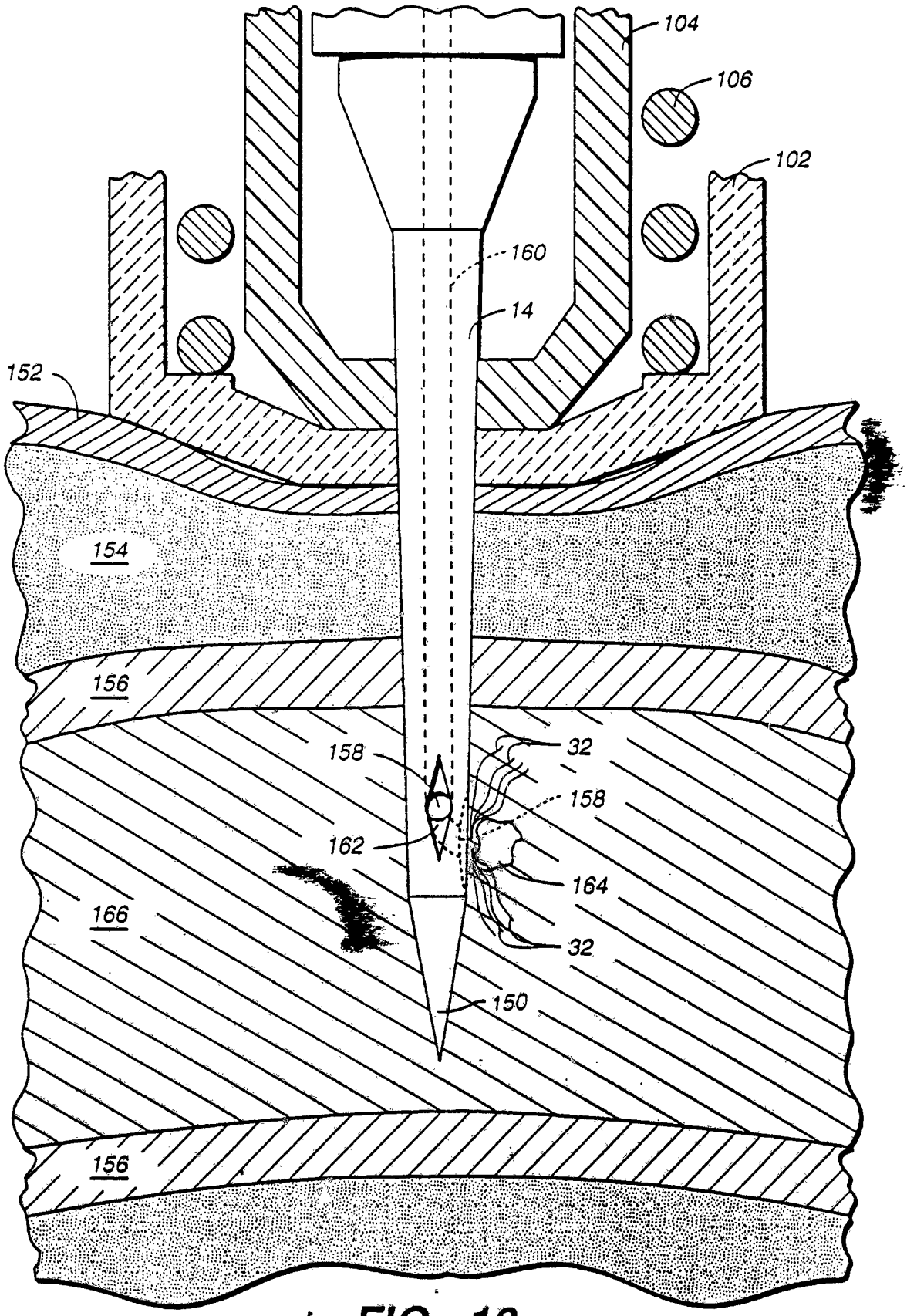

FIG._13

INTERNATIONAL SEARCH REPORT

International application No.
PCT/US92/03506

A. CLASSIFICATION OF SUBJECT MATTER

IPC(5) :A61M, 5/20, 5/315
US CL :604/135
According to International Patent Classification (IPC) or to both national classification and IPC

B. FIELDS SEARCHED

Minimum documentation searched (classification system followed by classification symbols)

U.S. : 604/134,136,137,272,274

Documentation searched other than minimum documentation to the extent that such documents are included in the fields searched

Electronic data base consulted during the international search (name of data base and, where practicable, search terms used)

NONE

C. DOCUMENTS CONSIDERED TO BE RELEVANT

Category*	Citation of document, with indication, where appropriate, of the relevant passages	Relevant to claim No.
Y	US,A, 4,530,695 (PHILLIPS ET AL) 23 JULY 1985 (Entire document)	1-4,8-10,15-17,21
Y	US,A, 3,797,489 (SARNOFF) 19 MARCH 1974 (Entire document)	1-4,8-10,15-17,21
Y	US,A, 4,676,781 (PHILLIPS ET AL) 30 JUNE 1987 (Entire document)	1-4,8-10,15-17,21
Y	US,A, 4,894,055 (SUDNAK) 16 JANUARY 1990 (Figures 3-4)	5
A	US,A,4,675,004 (HADFORD) 23 JUNE 1987	

[X] Further documents are listed in the continuation of Box C. [ ] See patent family annex.

*	Special categories of cited documents:	"T"	later document published after the international filing date or priority date and not in conflict with the application but cited to understand the principle or theory underlying the invention
"A"	document defining the general state of the art which is not considered to be part of particular relevance	"X"	document of particular relevance; the claimed invention cannot be considered novel or cannot be considered to involve an inventive step when the document is taken alone
"E"	earlier document published on or after the international filing date	"Y"	document of particular relevance; the claimed invention cannot be considered to involve an inventive step when the document is combined with one or more other such documents, such combination being obvious to a person skilled in the art
"L"	document which may throw doubts on priority claim(s) or which is cited to establish the publication date of another citation or other special reason (as specified)	"&"	document member of the same patent family
"O"	document referring to an oral disclosure, use, exhibition or other means		
"P"	document published prior to the international filing date but later than the priority date claimed		

Date of the actual completion of the international search 03 AUGUST 1992	Date of mailing of the international search report 28 OCT 1992
Name and mailing address of the ISA/ Commissioner of Patents and Trademarks Box PCT Washington, D.C. 20231 Facsimile No. NOT APPLICABLE	Authorized officer for PAUL J. HIRSCH Telephone No. (703) 308-0858

Form PCT/ISA/210 (second sheet)(July 1992)*

INTERNATIONAL SEARCH REPORT

International application No.
PCT/US92/03506

C (Continuation). DOCUMENTS CONSIDERED TO BE RELEVANT

Category*	Citation of document, with indication, where appropriate, of the relevant passages	Relevant to claim No.
Y	US,A, 4,790,830 (HAMACHER) 13 DECEMBER 1988 (Entire document)	6-7,11-12
Y X	US,A, 4,838,877 (MASSAU) 13 JUNE 1989 (Entire document)	6-7,11-12 13-14
A	US,A, 4,578,064 (SARNOFF ET AL) 25 MARCH 1986	
A	US,A, 4,710,180 (JOHNSON) 01 DECEMBER 1987	
A	US,A, 4,445,510 (RIGBY) 01 MAY 1984	
A	US,A, 4,850,967 (COSMAI) 25 JULY 1989	