May 15, 1928. 1,670,017

H. L. BERMAN

FOUNTAIN PEN FILTER ATTACHMENT

Filed April 20, 1926

Fig. 1.

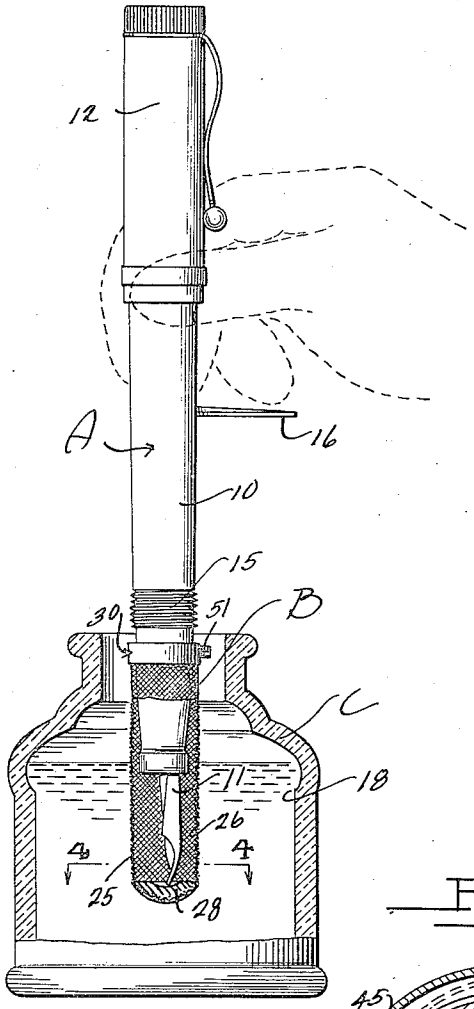

Fig. 2.

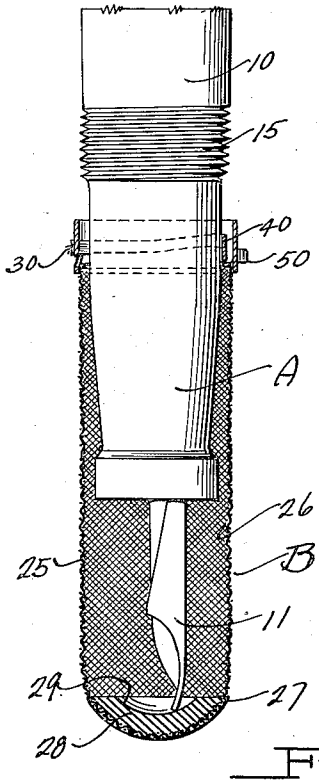

Fig. 8.

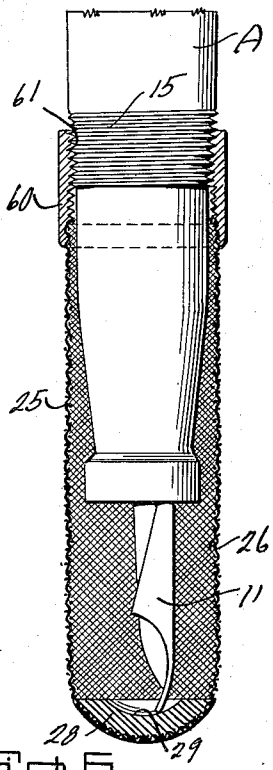

Fig. 3.

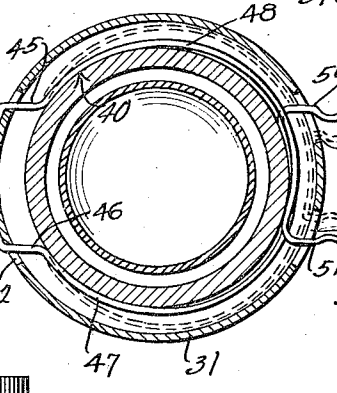

Fig. 6.

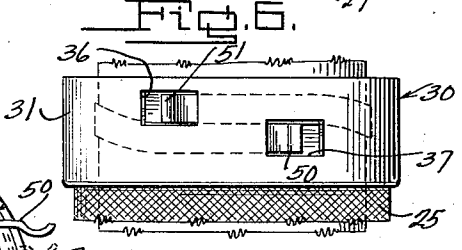

Fig. 4.

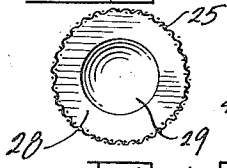

Fig. 7.

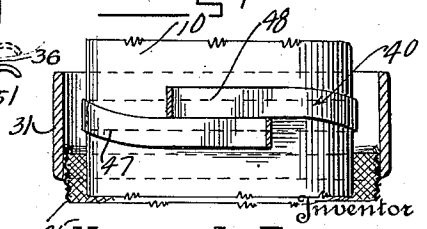

Fig. 5.

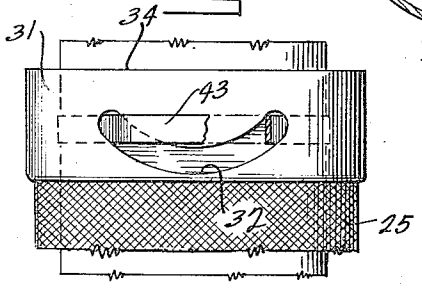

Inventor

Harry L. Berman

By Lancaster Allwine

Attorneys

Patented May 15, 1928. 1,670,017

UNITED STATES PATENT OFFICE.

HARRY L. BERMAN, OF ROXBURY, MASSACHUSETTS.

FOUNTAIN-PEN FILTER ATTACHMENT.

Application filed April 20, 1926. Serial No. 103,346.

This invention relates to improvements in fountain pens, and has more particular reference to a novel screening or filter attachment for use in connection therewith to permit of the filling of the pen with ink free of foreign particles or materials.

The primary object of this invention is the provision of an improved filter attachment used in connection with the filling of fountain pens of the type which have means for withdrawing ink from an ink receptacle; the improved filter attachment being adapted to be submerged into the ink supply receptacle with the point end of the pen therein, so that during the filling operation the ink may be drawn into the pen, and the pen point kept free of settlements of foreign particles.

A further object of this invention is the provision of an improved filter attachment to be used upon the point ends of fountain pens, of the self filling type, preferably by attachment to the pen, in order that foreign materials may be excluded from the pen barrel or tube, and to keep the point of the pen free from being clogged as by the drawing of foreign particles thereinto, as is sometimes the case.

Other objects and advantages of this invention will be apparent during the course of the following detailed description.

In the accompanying drawings, forming a part of this specification, and wherein similar reference characters designate corresponding parts throughout the several views,

Figure 1 is a side elevation of the fountain pen showing the improved attachment connecting thereon, and submerged in an ink-well for withdrawing ink therefrom.

Figure 2 is an enlarged fragmentary sectional view of the attachment showing it connected on the writing end of a fountain pen.

Figure 3 is an enlarged cross sectional view through the clamping end of the filter attachment, showing the means by which the same grips the casing of the fountain pen to be supported over the pen point.

Figure 4 is a cross sectional view taken substantially on the line 4—4 of Figure 1.

Figure 5 is a fragmentary side elevation of the clamping device, at the rear thereof.

Figure 6 is a front view of the clamp device of the attachment.

Figure 7 is an enlarged fragmentary sectional view taken through the clamping device of the improved attachment.

Figure 8 is an enlarged sectional view showing a modified form of connection for the filter attachment.

In the drawing, wherein for the purpose of illustration are shown preferred and modified forms of this invention, the letter A may generally designate a fountain pen of the self-filling type, upon which the improvided filter and screen attachment B is adapted to be used, so that when the point end of the pen A is submerged in a receptacle C, such as an ink bottle, for receiving ink therefrom, the ink may be drawn into the pen free of foreign particles, which are screened exteriorly of the pen point, and so that the foreign particles cannot lodge upon the pen point or be drawn into the pen barrel.

The pen A is of the conventional type, including the conventional barrel casing 10, having a pen point 11 thereon of the conventional type. A cap 12 is provided, the same being internally screw threaded at its open end, in accordance with conventional construction, for detachable connection with the screw threads 15 provided on the barrel casing 10, inwardly a short distance from the pen point 11. The fountain pen A may be of any type of self filling fountain pen, utilizing a collapsible tube, which may be collapsed in any approved manner, to create a suction when the clamping action thereon is released, for the drawing of ink into the ink tube in the barrel casing. The most conventional type is that of employing an operating lever 16, pivoted to swing exteriorly of the barrel casing 10, in order to collapse the ink tube in the barrel casing 10, and upon releasing of said lever 16 to fold it against the side of the barrel casing 10, the tube in the barrel is extended for withdrawing ink into the same thru the pen point end of the fountain pen, as is conventionally the case. In so doing this it is well known that particles in suspension in the ink well reservoir 18 lodge in the ducts of the pen point 11, and enter the tube, causing a clogging action therein, which prevents efficient writing. I am of course aware that filter devices have been employed within the compartments inside of fountain pens, but the attachment for the exterior of the pen point, as disclosed herein performs the dual function of protecting the pen point

against the lodgement of particles, as well as screening all foreign particles from entrance into the ink tube in the fountain pen.

Referring to the improved attachment B, the same preferably comprises a substantially cylindrical shaped body 25, of fine gauze, wire, or other material, preferably of a nature which will resist the corrosive and other deteriorating tendencies of the ink ingredients; the same being of a mesh sufficient to screen out of the fluid, the foreign particles in suspension therein, and prevent their entrance into the pocket 26 within the body 25. It is of course understood that the lower end 27 of the body 25 is closed, whereas the opposite end thereof is opened. This closed end 27 is preferably of concavo-convex formation, and within the compartment 26, resting on this closed end 27, preferably in a secured relation therewith, is a pen point protecting member 28, which may be of rubber or any approved yieldable or resilient material, having a concavity 29 therein, against which the point end of the pen point 11 may abut, as illustrated in Figure 2 of the drawings, to limit the assembled amplitude of movement of the attachment B upon the pen A.

The body 25 is sufficiently long that the entire point end of the pen may be received in the pocket 26 thereof, as well as a portion of the shank of the pen casing 15.

At the upper or inserting end of the body 25, it is preferred to place a clamp device 30, which engages the pen casing 10, in a clamped relation thereon, to support the attachment on the fountain pen, in a compact and efficient relation, to prevent its falling into the inkwell, during the filling of the pen. In lieu of this arrangement the attachment may be held by the fingers of the operator, or the attachment may rest upon the receptacle itself, or be supported in any other manner deemed practical. In the preferred instance, however, the clamping means 30 is provided, which consists of an annular metallic band 31, secured as by soldering or welding, or otherwise to the upper end of the body 25, to project above the top margin thereof. This band 31 at one side thereof is provided with a crescent-shaped slot 32 therein, having the convex side of the slot facing in the direction of the closed end of the gauze body 25, and with the upper ends of said slot spaced for substantially the same distance below and adjacent the top edge 34 of the band 31, as illustrated in Figure 5 of the drawing. Diametrically opposed from the slot 32 the band 31 is provided with a pair of spaced openings 36 and 37, preferably rectangular and elongated circumferentially about the band 31; said openings 36 and 37 being offset vertically from each other, along the axis of the band 31. The clamping device 30 also includes the clamping member or spring 40, which intermediate the ends thereof is bowed in U-shaped manner at 42 to provide an arcuated piece 43, which extends along the crescent-shaped slot 32, and engages against the tongue portion of the band 31 which is formed by the crescent-shaped slot; the U-shaped portion 42 also including legs 45 and 46 which extend transversely thru the slot 32, as illustrated in Figures 3 and 5 of the drawing, thru the outer ends of the slot 32, into the band 31, where the clamping member 40 bows at 47 and 48 at the interior of the band, at opposite sides thereof; the bows 47 and 48 overlapping each other adjacent the openings 36 and 37; and the bow portions 47 being extended past the opening 36, and having the free end thereof provided with a finger engaging handle or projection 50 which extends transversely and exteriorly thru the opening 37. The bow portions 48 on the other hand extend in overlapped relation with the bowed portion 47, past the opening 37, and has a finger engaging projection or handle 51 thereon which extends transversely and exteriorly thru the opening 36. In order to avoid entangling abutment, the bowed portions 47 and 48 adjacent the openings 36 and 37 are spirally inclined, as illustrated in Figure 7 of the drawing.

Referring to the connection of the improved attachment B on the fountain pen, the pen point end of course slips into the pocket 26, until the pen point 11 abuts or substantially abuts in the concavity 29 of the cushion piece 28, and to permit such insertion the fingers of the operator of course press the handle portions 50 and 51 of the clamping member 40 together, or towards each other, and in which case the bowed portions 47 and 48 are moved away from each other towards the inner periphery of the supporting band 31, to permit the insertion of the casing 10 of the fountain pen into the pocket 26. Immediately after the pen has been inserted to the position above described the operator releases the finger projections 50 and 51 of the clamp member 40, and due to the inherent tendency said spring member 40 then contracts, and the bowed portions 47 and 48 move together in a gripping relation about the casing of the fountain pen, in order to hold the attachment securely and firmly about the point end of the fountain pen, with the pen point enclosed in a screened and filtered relation with respect to the ink which is drawn into the fountain pen upon the proper operation, as above outlined.

In lieu of using the clamping means 30 above mentioned, the guard body 25 at the upper end thereof may be provided with an annular band or member 60, in a secured relation therewith, extending above the top margin of the body 25, and being externally

screw threaded at 61, on the same diameter and pitch as the screw threads 15 of the fountain pen casing, so that the attachment illustrated in Figure 8 may be screw threaded on the conventional cap screw threads 15 of the fountain pen casing, and thus the attachment has a secured connection to the fountain pen, with the pen point end thereof, protected in a screened relation in the pocket 26 thereof, as is illustrated in Figure 8 of the drawing.

From the foregoing description of this invention it is apparent that a novel type of filter device for fountain pens has been provided, which will permit of the efficient filling of the fountain pen, to the exclusion of all foreign particles which may be suspended in the ink.

Various changes in the shape, size, and arrangement of parts may be made to the forms of invention herein shown and described, without departing from the spirit of the same or the scope of the claims.

I claim:

1. In an attachment for fountain pens, a gauze screen cap for the point end of the fountain pen having a pocket wherein the point end of the pen is received, said cap at the inner end thereof having a safety cushion against which the pen point may abut when the same is fully inserted into the pocket thereof.

2. In a filling attachment for fountain pens an elongated gauze screening body having a pocket therein, a safety cushion closing one end of said pocket against which the pen point may abut in a protected relation, and clamping means at the opposite end of the body for engaging the fountain pen in a connected and supporting relation.

3. In a device for filtering ink prior to inlet to fountain pens the combination of a narrow elongated gauze body suitable for insertion into the neck opening of an ordinary ink well and having a pocket therein closed at one end and at the opposite end having an entrance for receiving the casing of the pen when the pen point is inserted into the pocket, and clamping means at the entrance end of the body for clamping about the pen casing to support the body in place.

4. As an article of manufacture a fountain pen ink filter attachment comprising an elongated gauze screen body having a pocket therein, having an entrance at one end thereof, clamp means at said entrance for engaging a fountain pen casing, and a safety cushion at the opposite end of the pocket against which a pen point may abut in a protected relation.

5. In a filter attachment for fountain pens, an elongated substantially cylindrical shaped gauze body having a pocket therein provided with an entrance into which the fountain pen casing may be slipped to dispose the pen point in the pocket, and clamp means on the gauze body about the entrance comprising an annular band, and spring clamp arms supported by the band in a transversely yieldable relation having an inherent contracting tendency to enter the entrance and contract in engaging relation about the fountain pen casing when inserted therein, said arms having finger engaging portions transversely extending exteriorly of the band.

6. As an article of manufacture an elongated substantially cylindrically shaped screen gauze container closed at one end and open at the other, means facing in the compartment of the container at the closed end constituting a protector for an object inserted into the container, and means supported at the opposite end of the container for gripping objects inserted into the container, said means being yieldably adjustable to the size of the object inserted into the container.

7. In a filter attachment for filtering ink for self filling fountain pens the combination of a pocketed gauze screen body of a nature suitable for insertion into the opening of an ink well to partially submerge the same and fill the pocket thereof, and a guard member in the bottom of the pocket against which a pen point may contact to protect the pen point and prevent destruction of the gauze screen.

HARRY L. BERMAN.