No. 895,450. PATENTED AUG. 11, 1908.

O. GLASS.

MUSIC BOX.

APPLICATION FILED MAY 13, 1907.

4 SHEETS—SHEET 1.

Fig. 1.

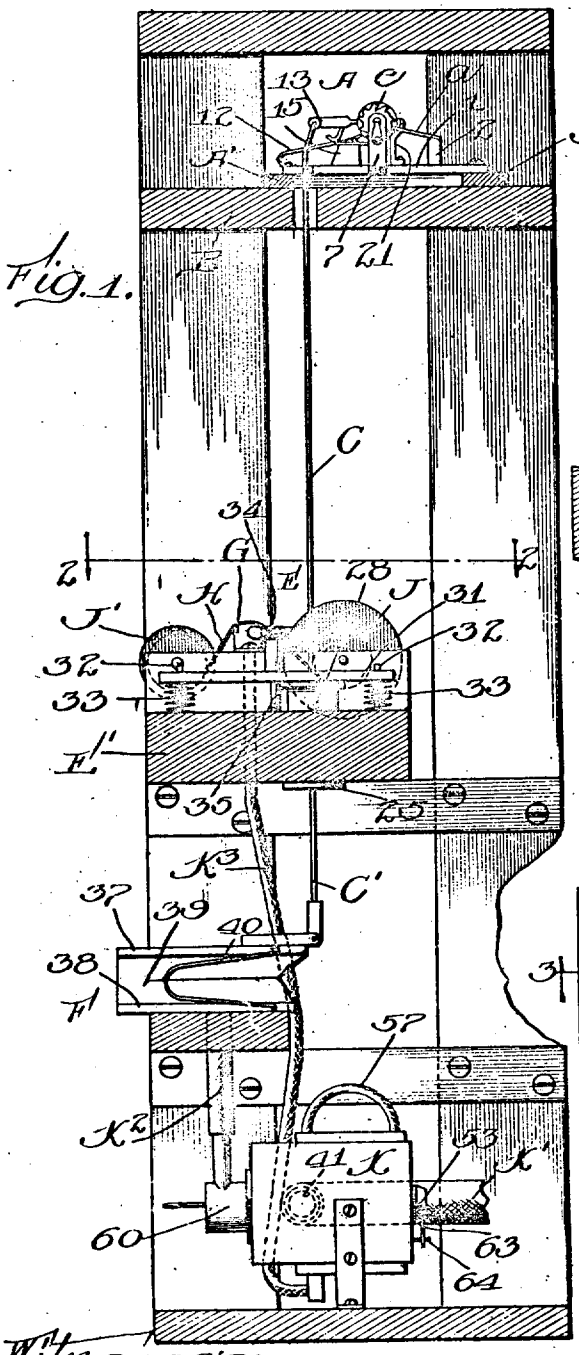

Fig. 3.

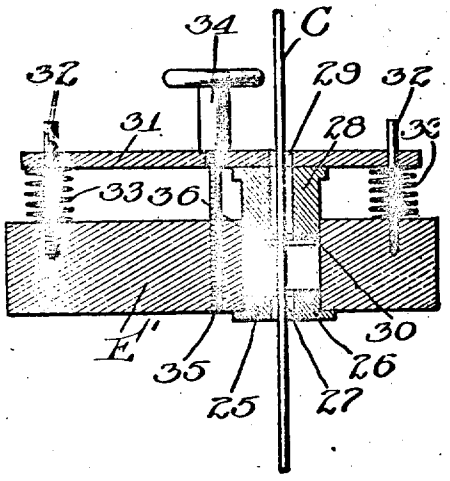

Fig. 2.

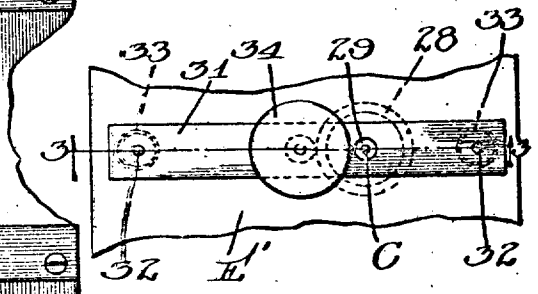

Witnesses:
Ira D. Perry
L. V. Domarus Jr.

Inventor:
Otto Glass.
by Otto R. Barnett
atty

No. 895,450. PATENTED AUG. 11, 1908.

O. GLASS.

MUSIC BOX.

APPLICATION FILED MAY 13, 1907.

4 SHEETS—SHEET 2.

Fig. 11.

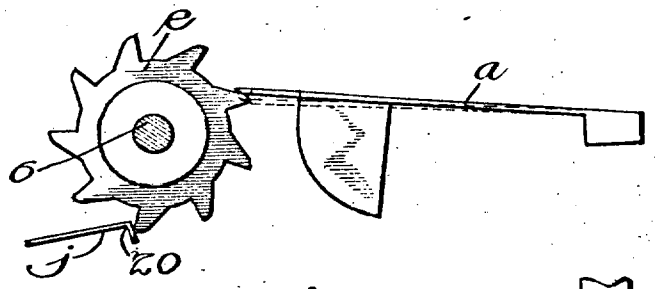

Fig. 4.

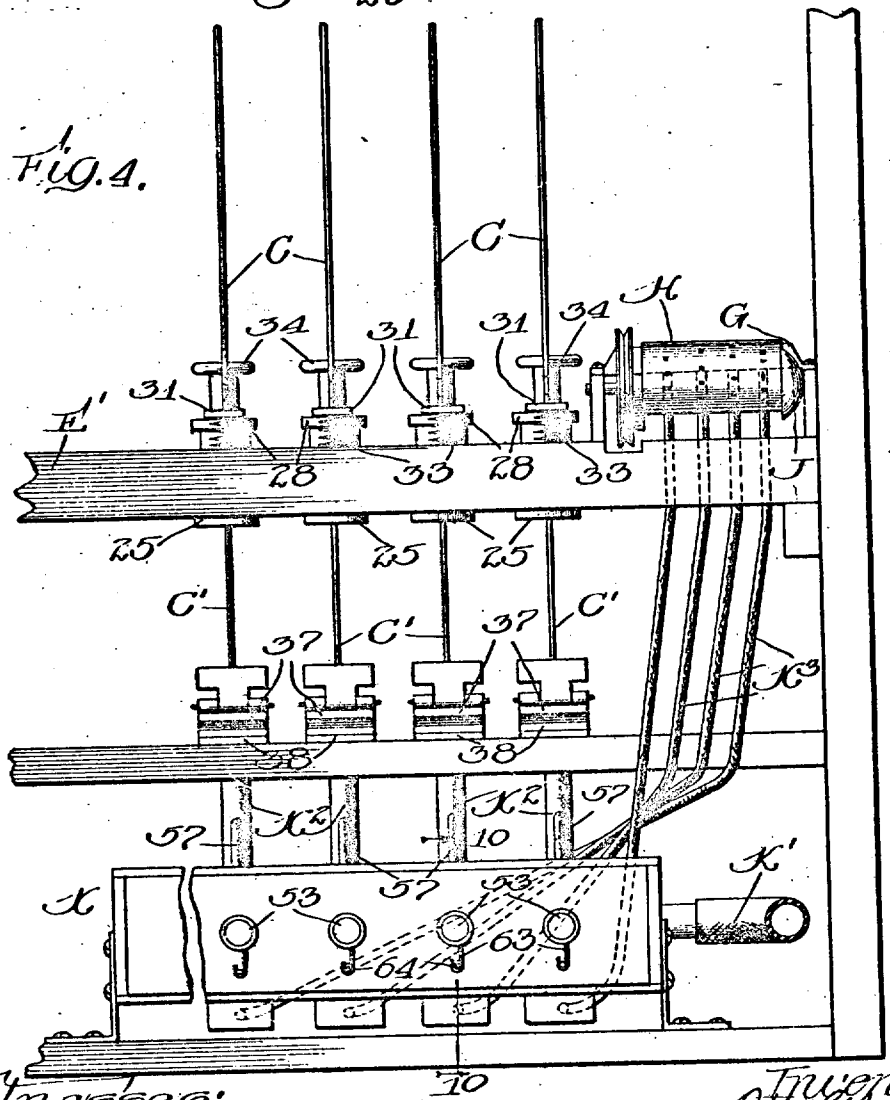

Witnesses:
Jas. D. Perry
G. V. Domarus Jr.

Inventor:
Otto Glass
by Otto R. Barnett
Atty.

No. 895,450. PATENTED AUG. 11, 1908.

O. GLASS.

MUSIC BOX.

APPLICATION FILED MAY 13, 1907.

4 SHEETS—SHEET 3.

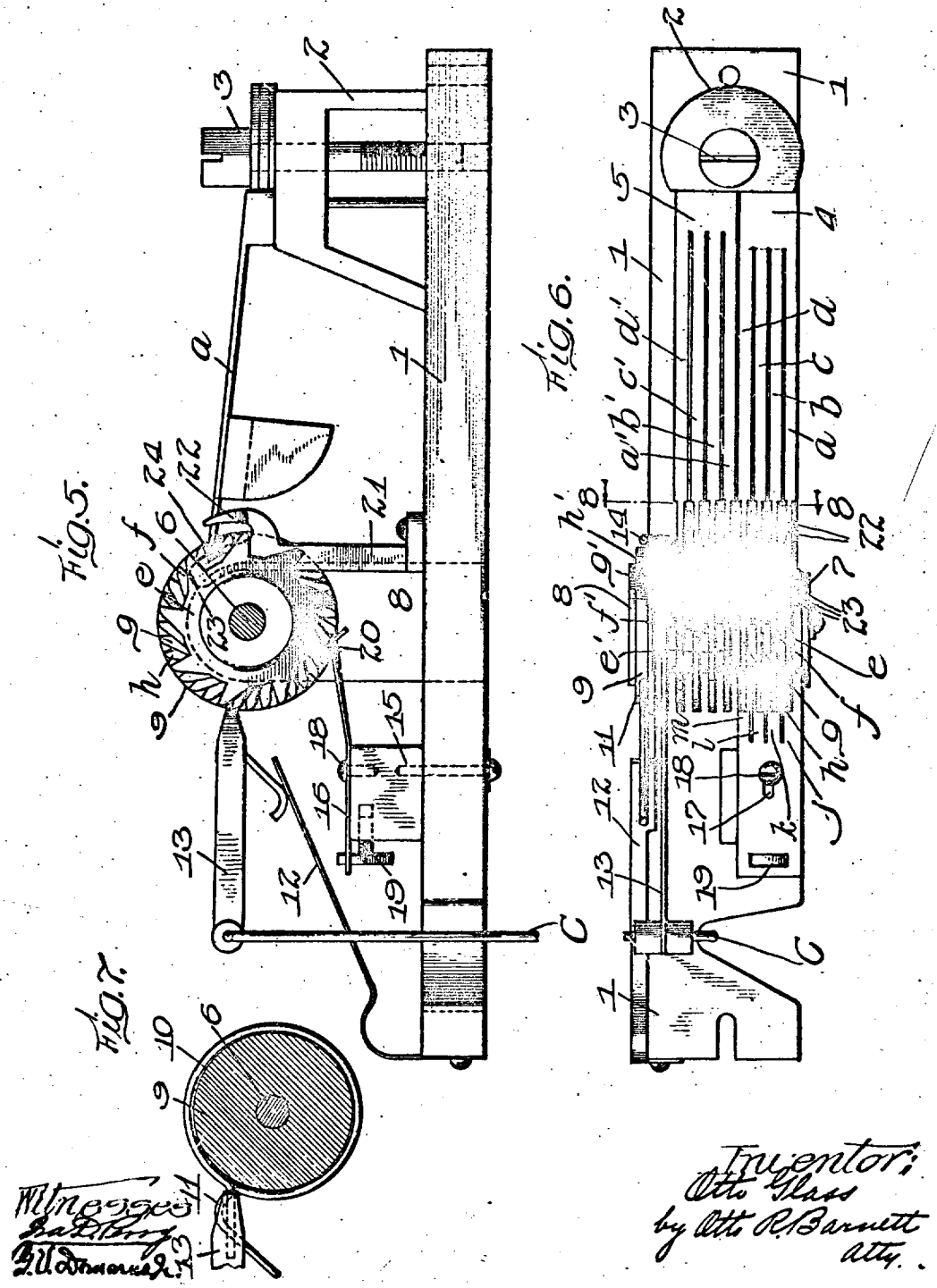

Witnesses:

Inventor:
Otto Glass
by Otto R. Barnett
Atty.

No. 895,450. PATENTED AUG. 11, 1908.

O. GLASS.

MUSIC BOX.

APPLICATION FILED MAY 13, 1907.

4 SHEETS—SHEET 4.

Fig. 8.

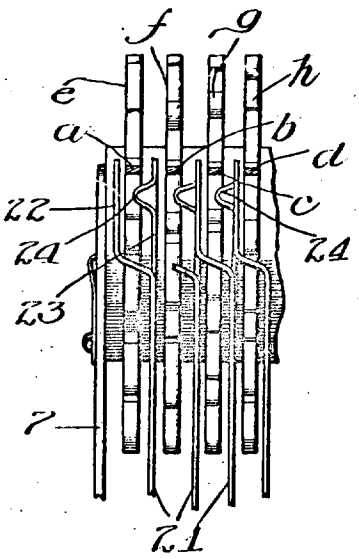

Fig. 9.

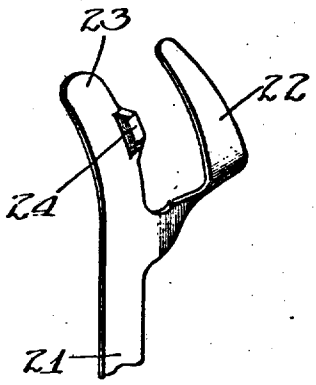

Fig. 10.

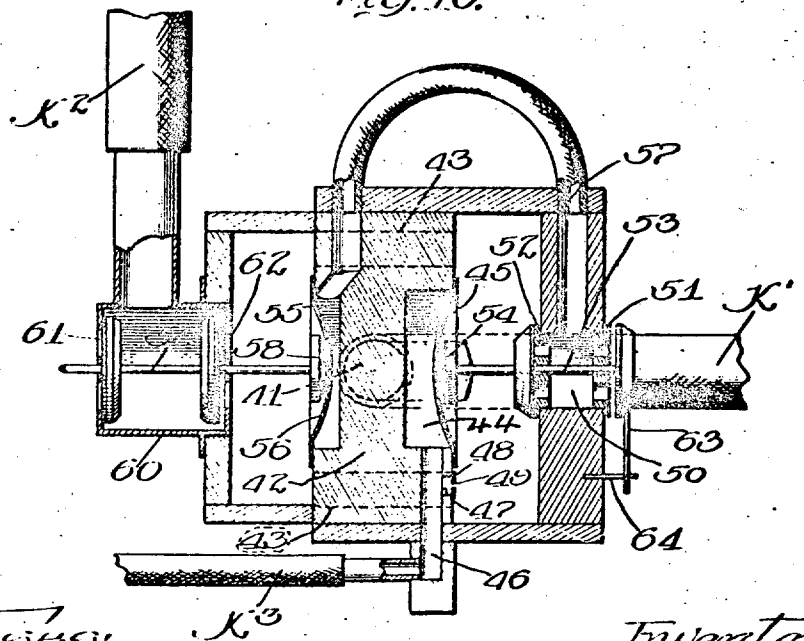

Witnesses:
Jas. D. Perry
G. V. Donaruma Jr.

Inventor:
Otto Glass
by Otto R. Barnett
Atty.

UNITED STATES PATENT OFFICE.

OTTO GLASS, OF CHICAGO, ILLINOIS.

MUSIC-BOX.

No. 895,450. Specification of Letters Patent. Patented Aug. 11, 1908.

Application filed May 13, 1907. Serial No. 373,274.

To all whom it may concern:

Be it known that I, OTTO GLASS, a citizen of the United States, residing at Chicago, in the county of Cook and State of Illinois, have invented certain new and useful Improvements in Music-Boxes, of which the following is a specification.

My invention relates to music boxes and has for its object to provide new and improved constructions in the devices for producing musical tones and new and improved devices, constructions and arrangements in the apparatus for operating such devices.

More particularly the invention has for its object to construct the devices which produce the musical tones each with a plurality of vibrating elements having the same pitch and which are designed to be struck in succession by a series of star wheels having picking points set in staggered relation. By this construction of sound producing device, I obtain a decrease in the amount of rotation which it is necessary to give to the rotary picker or star wheel, resulting in the advantages which will appear more fully in this specification.

My invention has for a further object to provide apparatus for operating sound producing devices of this character by the application of pneumatic pressure; and in providing means for adjusting the connections between the pneumatics and the sound producing devices, so that the latter may be played in perfect time.

The invention has for further objects the several improvements in the construction of the tone producing devices and of the other mechanism of the music box, which are shown and will be described in this specification.

The invention is illustrated in the accompanying drawings, wherein

Figure 1 is a vertical section through one form of music box illustrating a complete set of apparatus for the production of a single musical tone from the tone producing device to the wind chest, omitting, however, the feed and reservoir bellows or other means for producing vacuum in the wind chest, which forms no part of my present invention. Fig. 2 is a partial sectional plan view on the line 2—2 of Fig. 1, looking in the direction indicated by the arrows. Fig. 3 is a section on line 3—3 of Fig. 2. Fig. 4 is a partial rear view of the apparatus. Fig. 5 is a side view of one of the tone producing devices. Fig. 6 is a plan view of the same. Fig. 7 is a vertical section through the driving drum for the star wheel. Fig. 8 is a vertical section on line 8—8 of Fig. 6, looking in the direction indicated by the arrows. Fig. 9 is a detail in perspective of one of the dampers; and Fig. 10 is a vertical section on line 10—10 of Fig. 4, looking in the direction indicated by the arrows. Fig. 11 is a detail of the tone producing device.

Like characters of reference indicate like parts in the several figures of the drawings.

Referring to Fig. 1 of the drawings, which gives a general view of the part of the apparatus embodying my improvements, A represents one of the tone producing devices mounted upon cleats A′, A′ on the sounding board B. C is the operating rod and E the regulating mechanism taken as a whole, which is mounted upon and in a block E′. C′ is the continuation of the operating rod which extends from the regulating mechanism to the motor pneumatic F. G is the tracker board having the customary perforations over which passes the perforated sheet of music H, it being from roll J to roll J′ or vice versa. K is the wind chest which is exhausted through pipe K′ and connected with pneumatic F by pipe K^2 and with the tracker board by pipe K^3.

It will be understood that for the production of each musical tone there will be a set of apparatus consisting generally of the elements above set forth: that is, a tone producing device, an operating rod, adjusting mechanism, motor pneumatic and connections from the tracker board and motor pneumatic to the wind chest. I have described only one set of apparatus, as all these sets of apparatus are constructed in substantially the same manner.

Referring particularly to Figs. 5 to 9 inclusive, which illustrate one of the tone producing devices, 1 represents a metallic base, 2 a chair secured to the base by screw 3, upon which is mounted the vibrating comb or combs which produce the musical tone. I have shown two of these combs 4 and 5 each divided so as to form four separately vibrating tongues which I have designated respectively as *a*, *b*, *c*, *d*, and *a′*, *b′*, *c′*, *d′*. The tongues of the two combs are shown as of

different lengths proper for the production of musical sounds of the same tone but an octave apart. This arrangement is not essential to the operation of my device. The two combs might be of the same pitch or only one comb need be employed. The use of the two combs, which are designed to be vibrated simultaneously, is so that one will correct the other and so that the two together will give an increased volume of sound.

The tongues of each comb are designed to be set in vibration one after another by a series of star wheels or similarly constructed pickers which are connected together rigidly side by side and rotated together. For each comb there will, therefore, be four of these star wheels. These star wheels, designated *e*, *f*, *g*, *h* and *e'*, *f'*, *g'*, *h'* are rigidly mounted on a shaft 6 which rotates in standards 7, 8. Each star wheel has ordinarily nine teeth or picking points and the star wheels are so set on the shaft that corresponding teeth of successive wheels follow each other at an angular distance equal to one-fourth the distance between the teeth on any given wheel. The teeth, therefore, of each set of four wheels are brought in succession against the four tongues of the corresponding comb, a one-thirtysixth turn of the wheels being sufficient to set one of the tongues in vibration. It is necessary, of course, that there should be sufficient room between the several teeth of each star wheel so that its corresponding tongue may vibrate freely. It is, therefore, not practical to have a great number of teeth or picking points on any one wheel. At the same time it has been found to be undesirable to rotate the wheel through so great an angular distance as is represented by the interval between the teeth of, for example, a nine pointed star wheel, as such an amplitude of movement requires considerable time and the expenditure of power and is apt to result in an uneven action.

My invention of a comb having a plurality of vibrating elements of the same pitch together with the multiple star wheel to set the vibrating elements in vibration successively results in a very great improvement upon the older forms of mechanism.

The star wheels may be rotated by any suitable form of apparatus. I have designed a clutch mechanism which is particularly apt for this purpose. On the shaft 6 is a drum 9 around which is looped a spring strap 10, one end of which is preferably bent up as at 11 and rests upon the end of a spring 12 secured to the base 1, the other end terminating in a lever 13 to which is connected the operating rod C. An upright rod 14 holds the loop upon the drum and also serves as a brake for the drum. The loop may make any number of turns around the drum, ordinarily two turns will be sufficient. When the operating rod C is depressed, the strap will tend to slip around the drum, but this slipping movement is arrested by the upward pressure of spring 12, resulting in a clamping of the loop around the drum and in the rotation of the latter.

It will be understood that the combs of different pitch will ordinarily have tongues of different lengths; and it will be clear that the shorter tongues will escape or tack off from the star wheels more quickly than the longer tongues. Some sort of adjustment has, therefore, to be effected in order that the different tone producing devices may play in time. To this end, I have invented a multiple dog adapted to act upon the star wheels of one set and which is capable of adjustment so as to advance the initial positions of the picking points of the star wheels with respect to the tongues more or less, according to the amount of rotation necessary to give to the star wheels before the tongues will escape or tack off.

15 is a block or chair upon which is the dog 16, which consists of a thin plate of metal slotted at 17 so as to be guided by the screw 18 and also slotted at the rear end to receive the periphery of the set screw 19 which works back and forth in the chair. The forward end of this multiple dog is bent up and slit, so as to form four tongues *j*, *k*, *l*, *m*, these tongues being formed with bends 20 over which the teeth of the star wheels *e*, *f*, *g*, *h*, ride.

Fig. 11 illustrates the position of the outside star wheel *e* and its picking points in relation to tongue *a* of the comb 4 and tongue *j* of the dog, the parts taking this position just before the tongue *a* is to be tacked off; that is, the star wheel *e* is carried into this position by the last movement of rotation given to the drum 9. It will be seen that by sliding the dog 16 forward toward the comb, which can be done by screwing in set screw 19, the picking point of star wheel *e*, over which tongue *a* is to escape or tack off, will be raised so that the escapement or tacking off will occur more quickly than it would with the parts in the position shown. In like manner by drawing the dog backward or away from the comb, the tacking off can be made to occur later in the movement of rotation.

When one tongue of a comb of the character shown is set in vibration, the other tongues, it will be understood, will vibrate in sympathy, since they are all the same pitch. If this vibration is allowed to continue at the time the picking point touches the end of a tongue, the result will be an impure tone. It is, therefore, necessary to damp or muffle the tongues before the picking points are brought into contact with them. In the drawings I have shown a series of dampers which normally stand away from the tongues,

but which are adapted to be brought into contact with the same just before the tongues are lifted by the star wheels. These dampers consist each of an upright spring member 21 forked at the upper end so as to form two prongs 22 and 23 (see Figs. 8 and 9), the prong 23 having a lug or off-set 24 which normally stands in the path of a star wheel, the other prong 22 extending around the corresponding tongue of the comb. As a picking point of a star wheel comes up under its tongue, it comes into contact with the lug 24 of the damper, operating upon that tongue, forces the same outwardly and draws the prong 22 against the tongue, stopping the vibration thereof. As it is, of course, desirable to be able to produce as great a volume of tone as possible from any of the sound producing devices, the advantage of my multiple system of vibrating elements taken in connection with the means for damping the several elements will be obvious. When one tongue is set in vibration the other tongues will all vibrate in unison, except the tongue or tongues which are being dampened prior to being set in vibration themselves, the others continuing to vibrate until so acted upon by the dampers and thus helping to swell the volume of sound as long as it is possible for them to do so. The teeth or picking points of the star wheels are set far enough apart so that several of the tongues may always be vibrating at the same time. When two combs are used either of the same pitch or an octave apart, the latter being the arrangement which I have shown for purposes of illustration, it will be understood that the sets of star wheels for vibrating the combs will be so arranged that two tongues one of each comb will be acted upon simultaneously. I might, of course, increase the number of combs to any desired extent. I might also increase or decrease the number of tongues on each comb with a corresponding change in the number of star wheels. When pneumatic pressure is utilized for operating the tone producing devices, the advantage of the multiple star wheel system, giving, as it does, a short stroke, is very obvious, as the difficulty of getting a sharp, quick action is materially decreased with the decrease of the length of stroke. The practical success of pneumatically operating a tone producing device consisting of vibrating tongues and picking points depends very largely upon the possibility of so reducing the work of the pneumatics.

It is desirable also that the connection between lever 13 of the sound producer and motor pneumatic F should be capable of adjustment, as it is not possible, or at least practical, to so adjust the parts of the several sets of apparatus so that they operate in perfect accord. I have provided means of adjustment, shown particularly in Figs. 1 to 4 inclusive. The block E′ is perforated, the perforation being closed at the bottom by a plug 25, upon the upper face of which is a buffer 26 of felt or such like material. This plug has a perforation 27 through which the operating rod or wire C extends. Above the plug 25 is a movable plug 28 centrally perforated at 29 and provided on its lower face with a felt buffer 30 to which is connected a strip 31 having perforations in its ends so that it may be guided upon the pins 32 connected with block E′, springs 33 being interposed between the strip 31 and block E′. An adjusting screw 34 extends through the strip 31 and into a screw threaded perforation 35 in the block. The operating rod C is provided with a loop or cross-piece 36 which lies between plugs 25 and 28. By means of the adjusting screw 34 the limit of motion of the operating rod may be varied at will. It will be seen that this construction is well calculated to muffle any sound that might be produced by contact of the cross piece 36 with the plugs, this cross-piece being located in the chamber formed by the solid block E′ and the felt covered plugs. Springs 33 aid in taking up any vibration due to jar.

The operating rod is preferably a single piece of stiff wire extending through the plugs and attached to the upper member of pneumatic F.

The bellows may be of any desired construction. I have shown them as consisting of the top and bottom 37 and 38 joined by flexible sides 39, the parts being normally expanded by means of spring 40.

The wind chest is shown in detail in Figs. 1, 4 and 10. The chamber within the chest is exhausted through a pipe K′ which enters the chest at 41, which pipe leads to the feed bellows or other suction device, the latter forming no part of my present invention. Within the wind chest is a block 42 having passage-ways 43, 43 therethrough to permit the passage of air from one side of the wind chest to the other. The block is chambered at 44, which chamber is covered by a diaphragm 45. A pipe 46 leads from the pipe K^3 going to the tracker board into chamber 44. A perforation 47 extends through the block into this passage-way, the perforation being covered preferably by a leather washer 48 which has in it the pin hole 49. The wall of the wind chest has an aperture 50 in which are formed the valve seats 51 and 52 for the double beat valve 53, on the stem of which is a button 54, against which diaphragm 45 presses when the latter is expanded. On the other side of the block is another chamber 55 with its diaphragm 56, chamber 55 being in communication with aperture 50 by means of passage-way 57. Diaphragm 56 operates against a button 58

on the stem of a double beat valve 59, which operates within a valve chamber 60 to alternately open and close ports 61 leading out from the valve chamber and ports 62 between the valve chamber and the wind chest. The pipe K^2 from the pneumatic F terminates at the valve chamber 60. Valve stem 59 preferably extends through the wall of the valve chamber so as to guide the movements of the valve. The valve 53 may be guided in its movements by a loop 63, which extends over a pin 64 on the outside of the wind chest.

The tracker board and music rolls may be of any desired construction customary in pneumatically operated music roll devices, the music being perforated and passing from one roll to the other over the tracker board, which, it will be understood, is provided with perforations corresponding to pipes K^3, there being one perforation to correspond to each set of apparatus for the production of a musical tone. When a perforation in the music registers with a perforation in the tracker board, the vacuum in the chamber 44 communicating with this particular perforation in the tracker board which is maintained by means of the communication between chamber 44 and the interior of the wind chest through pin hole 49 is broken and the air enters chamber 44 through pipe K^3 and passage 46, expands diaphragm 45, forces the valve 53 to the right (as shown in Fig. 10), closing the ports in the valve seat 52 and opening the ports in the valve seat 51, which ports it will be understood communicate with the air outside the wind chest. Pressure will thereupon enter passage 57 and diaphragm chamber 55, pushing button 58 to the left (as shown in Fig. 10), opening port 62 and closing port 61. The wind chest will then be in communication with pipe K^2 leading to the motor pneumatic, the latter will be collapsed, operating rod C depressed and lever 15 rocked, so as to move one of the picking points of the multiple star wheel against one of the tongues of the comb to set the same in vibration. It will be seen that the valve chamber 61 is located on the outside of the wind chest. Preferably it is so attached to the wind chest that it may be easily removed, so that access may easily be had to the interior of the chest for repairs or adjustment.

It will be noted, and this is one of the improvements which is involved in the construction of the music box shown herein, that the several devices for producing the several musical tones are entirely separate one from another, each having its own vibrating element or series of vibrating elements distinct from the vibrating elements of the other devices. Ordinarily in music boxes the vibrating elements are all a part of a single comb, so that if there is any imperfection found in the comb, the whole comb has to be rejected and the same is the case in the event that one of the tongues breaks. The single comb has another disadvantage in that the positions of the several notes on the sounding board are fixed by their position in the comb. Ordinarily the bass notes are at one end of the comb and the high notes at the other end. It is desirable that the low note tone producing devices should be located in the center of the sounding board where the amplitude of vibration is the greatest, but this cannot conveniently be done where a single comb is used. By my construction of separate combs operated by separate operating means any desired arrangement of the sound producing devices upon the sounding board may be made.

I wish it to be understood that I do not desire to limit myself to the exact devices and constructions herein shown, as various modifications of the same will occur to persons skilled in the art.

The various improvements herein shown and described are designed and are particularly suitable for conjoint use, but they might be used separately in other sorts of mechanically operated musical instruments than the sort shown.

I claim:

1. The combination with a plurality of vibrating elements having identical tones, of a rotary picker to set the same in vibration, and means for giving intermittent rotation to said picker, the picker comprising devices arranged so as to act on the vibrating elements in succession.

2. The combination with a comb having a plurality of tongues adapted to give forth identical tones, of a plurality of star wheels connected so as to rotate together with their picking points arranged in staggered relation, so as to operate upon the tongues successively.

3. The combination with sets of vibrating elements, the elements of the several sets being tuned an octave apart, of a rotary picker adapted to operate only upon said vibrating elements and operating simultaneously upon the elements in each set and successively upon the elements of a given set.

4. The combination with a series of vibrating elements, of a shaft, a plurality of star wheels rigid on said shaft, the picking points of the several star wheels being arranged in staggered relation so as to operate upon the vibrating elements successively, and means for giving a step by step rotation to the star wheels.

5. The combination with a vibrating element, of a rotary picker and means for operating the same comprising a drum, a loop of elastic material extending around the drum,

and means for gripping the loop around the drum.

6. The combination with a vibrating element, of a rotary picker and means for operating the same comprising a drum, a loop of elastic material extending around the drum, a spring against which one end of the loop abuts, and operating means connected with the other end of the loop.

7. The combination with a vibrating element, of a shaft, a star wheel on the shaft, a drum on the shaft, a loop of elastic material extending loosely around the drum, a spring, an extension from one end of the loop engaging with the spring, a lever attached to the other end of the loop, and operating means connected with the lever.

8. The combination with a vibrating element, of a rotary picker, means for rotating the same through given angular distances, and means for adjusting the relative positions of the picker and vibrating element so as to vary the interval of time intervening between the commencement of a movement of rotation of the picker and the escapement of the vibrating element therefrom.

9. The combination with a vibrating element, of a rotary picker having a plurality of circumferential picking points, and a dog which said picking points engage successively, and means for adjusting said dog to vary the initial position of the picking points relative to the vibrating element.

10. The combination with a vibrating element, of a rotary picker having a plurality of circumferential picking points, a spring dog over which the picking points ride, and means for giving a forward and back adjustment to the dog so as to vary the initial position of the picking points relative to the vibrating element.

11. The combination with a vibrating element, of a shaft having a star wheel thereon, a spring dog, capable of forward and back movement, over which the star wheel picking points ride, means for guiding the movement of the dog, and a set screw engaging with the dog whereby the same may be set in a variety of positions relative to the star wheel.

12. The combination with a tone producing device, of a reciprocating, operating connection therefor, means for imparting movement to the operating connection, and means for limiting the movement so imparted comprising a stop on the operating connection, a chamber confining said stop and through which the operating connection passes, and an adjustable plug within said chamber.

13. The combination with a tone producing device, of an operating connection, means for imparting reciprocating movement to the same, and means for limiting said movement comprising a chambered sound deadening block, a stop on the operating connection which moves within the chamber in said block, a movable block extending into and closing the chamber on one side, and means for adjusting the position of said block.

14. The combination with a tone producing device, of an operating connection, a perforated sound deadening block, through the perforation of which the operating connection passes, a fixed plug extending into the perforation on one side of the block, a movable plug extending into the perforation on the other side, a strip connected with the movable plug, yielding means between the block and the strip and a set screw adapted to vary the relative position of the strip and plug with respect to the block.

15. The combination with a plurality of vibrating elements, of rotary pickers adapted to set the same in vibration, motor pneumatics, means for exhausting the air therefrom, operating connections from the pneumatics to the pickers, and means for adjusting the relative positions of the vibrating elements and their respective pickers so as to vary the intervals of time intervening between the commencement of the movement of rotation of the pickers and the escapement of the corresponding vibrating elements therefrom.

16. The combination with a sounding board, of a plurality of separate combs, one for each musical tone, and separate means for setting in vibration the several combs.

17. The combination with a sounding board, of a plurality of separate tone producing devices, said devices comprising vibrating elements, the elements of the several devices being separate from each other, and separate means for setting the vibrating elements in vibration.

18. The combination with a vibrating element, of a rotary device for setting the same in operation, and means for imparting a step-by-step rotation to said device comprising a reciprocating part and a flexible member adapted to have frictional engagement with the rotary device.

19. The combination with a vibrating tongue, of a star-wheel adapted to set said tongue in vibration, means for giving a step-by-step rotation to the star-wheel comprising a reciprocating part, a rotating member rigidly connected with the star wheel, and a flexible member adapted to have frictional engagement with said rotating member, and means whereby the step-by-step movements of rotation of the star-wheel are made uniform.

20. The combination with a vibrating element, of a rotary device for setting the same in operation, means for imparting a step-by-step movement of rotation to said device comprising a flexible member adapted to have

frictional engagement with said rotary device. a bellows, and connections from the bellows to said member.

21. The combination with a plurality of vibrating elements of different lengths, of a plurality of rotary pickers, means for rotating said pickers, and means for varying the operation of the pickers on their respective vibrating elements, so that by simultaneously rotating the pickers vibrating elements of different lengths may be made to escape therefrom at the same time.

OTTO GLASS.

Witnesses:
PERCIVAL W. TRUMAN,
H. L. PECK.