United States Patent

[11] 3,543,752

[72] Inventors Holger Hesse, Lyngby
Carl Sloth, Copenhagen Valby, and
Asger Brendstrup, Glostrup, Denmark;

[21] Appl. No. 460,302
[22] Filed June 1, 1965
[45] Patented Dec. 1, 1970
[73] Assignee said Sloth and Brendstrup assignors to said Hesse; Ruth Leo Hesse, heiress and executrix of the estate of said Holger Hesse, deceased.
[32] Priority June 1, 1964
[33] Great Britain
[31] 22,651/64

[54] **INFUSION APPARATUS**
16 Claims, 9 Drawing Figs.

[52] **U.S. Cl.** **128/214,** 128/230, 137/394; 222/52, 222/64; 103/234
[51] **Int. Cl.** **A61m 5/00**
[50] **Field of Search** ..... 128/213, 214, 214.2, 227, 230, 274; 222/14, 40, 52, 56, 59—60, 63—65, 450; 137/394; 103/148, 234

[56] **References Cited**

UNITED STATES PATENTS

2,625,933	1/1953	Salisbury	128/214.2
2,689,565	9/1954	Gobel	128/214.2
2,693,801	11/1954	Foreman	128/214
2,705,493	4/1955	Malmros et al.	23/258.5
2,835,252	5/1958	Mauchel	128/214
2,847,008	8/1958	Taylor et al.	23/258.5
2,927,582	3/1960	Berkman et al.	23/258.5
3,014,481	12/1961	Rumble et al.	128/214
3,052,238	9/1962	Broman et al.	128/214

Primary Examiner—Dalton L. Truluck
Attorney—Spencer and Kaye

ABSTRACT: An apparatus for performing continuous infusion of liquids into blood vessels or muscles of animal or human bodies over an extended period of time with a desired degree of dosage exactitude. The apparatus has a treating liquid container, a pump, an infusion cannula adapted to be inserted in the body of the animal or person to be treated, a gas bubble-collecting vessel and safety means responsive to the presence of a predetermined volume of accumulated gas in the collecting vessel.

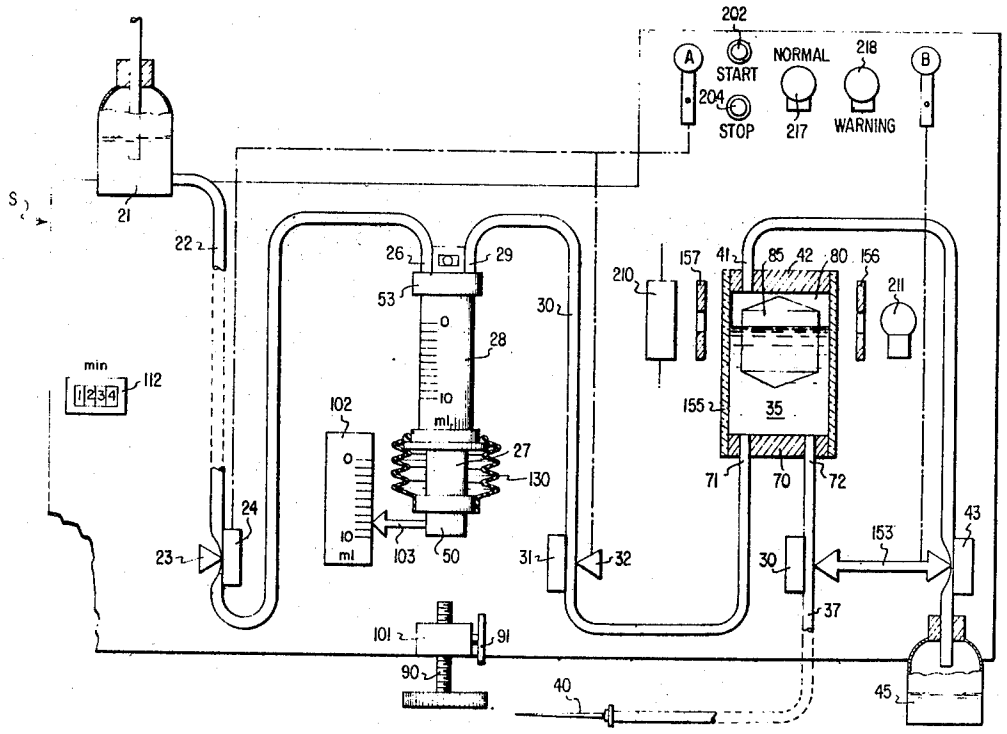

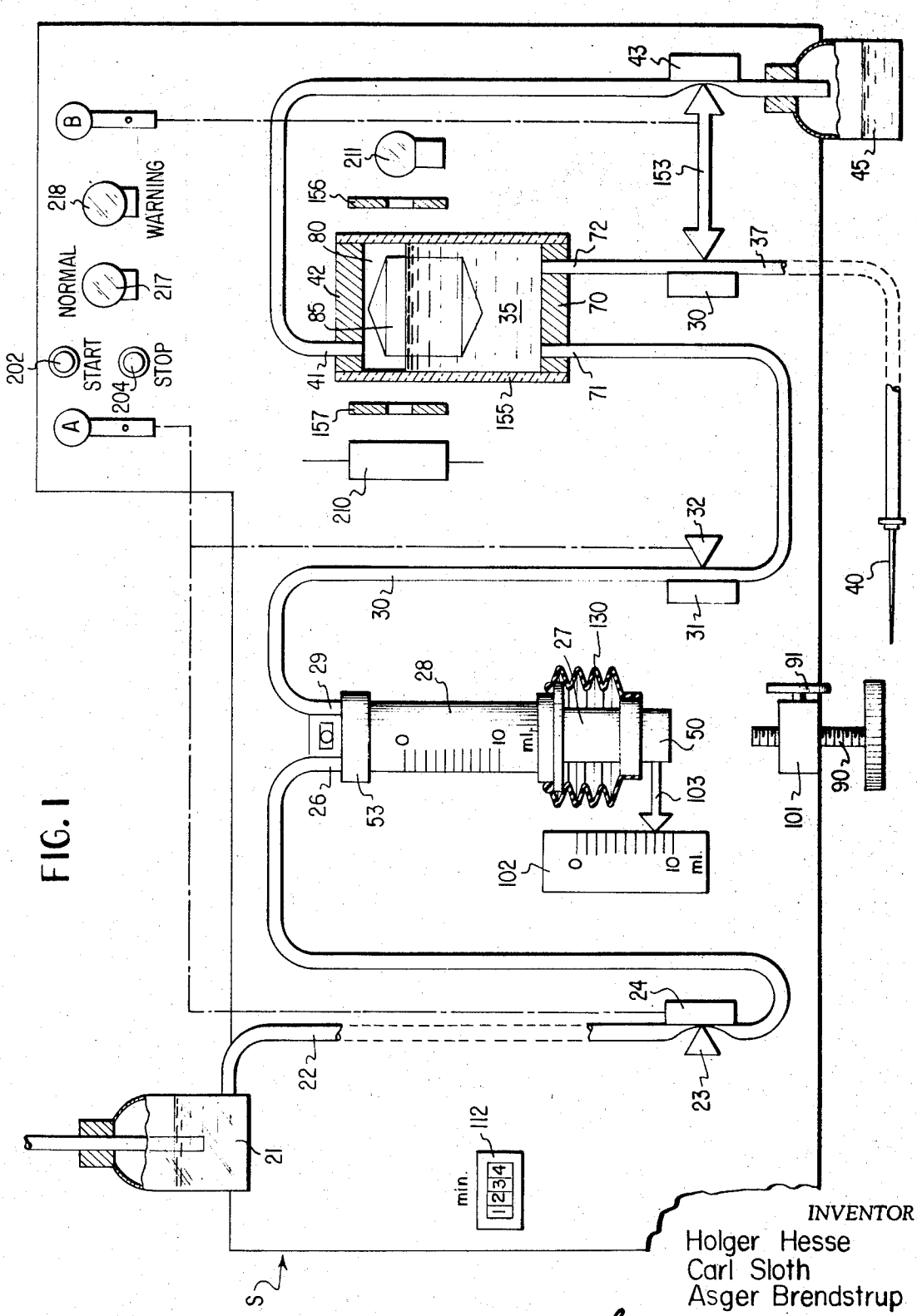

FIG. 1

INVENTORS,
Holger Hesse
Carl Sloth
Asger Brendstrup
BY Spencer & Kaye
ATTORNEYS.

FIG. 2

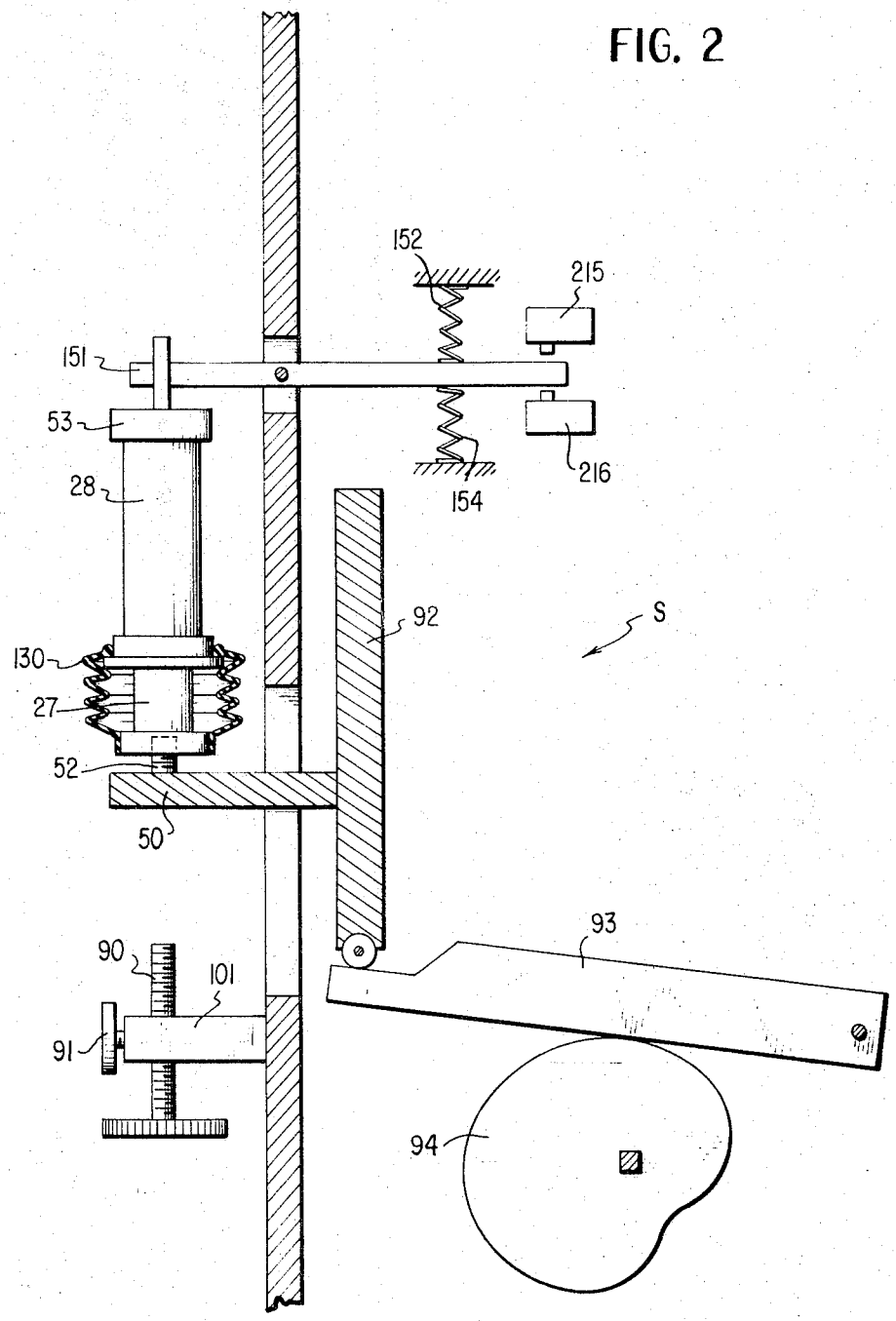

INVENTORS.
Holger Hesse
Carl Sloth
Asger Brendstrup
BY Spencer & Kaye
ATTORNEYS.

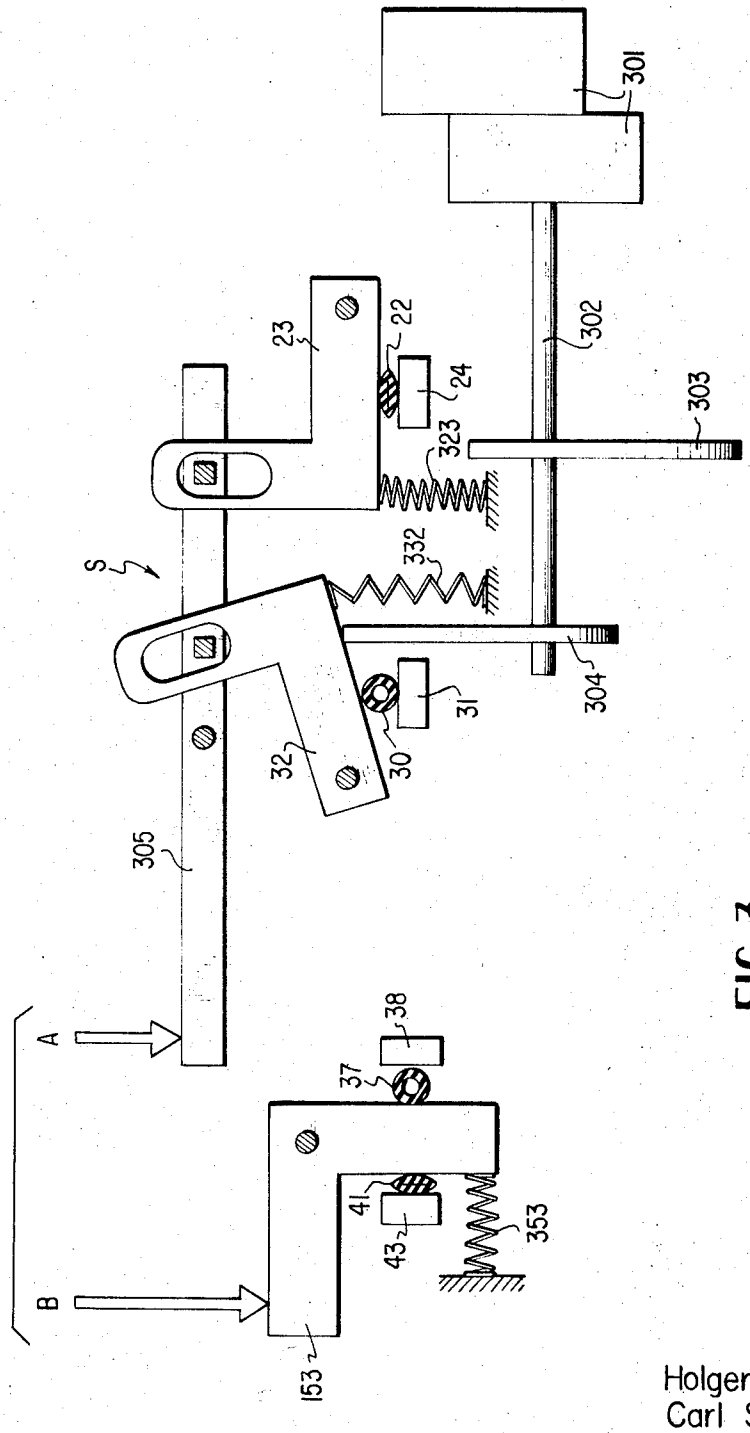

FIG. 3

INVENTORS.
Holger Hesse
Carl Sloth
Asger Brendstrup

BY Spencer & Kaye
ATTORNEYS.

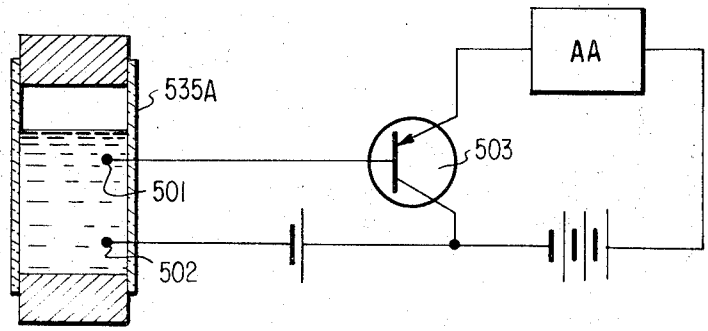

FIG. 5a

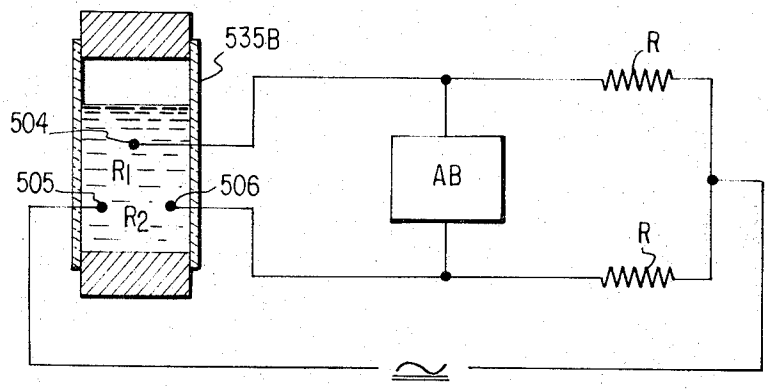

FIG. 5b

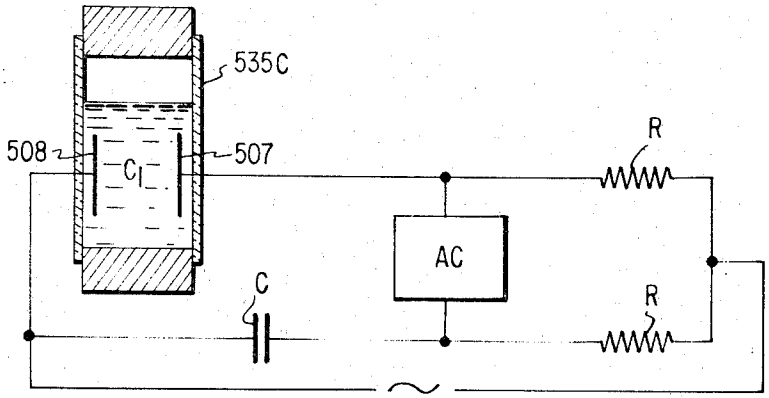

FIG. 5c

INVENTORS.
Holger Hesse
Carl Sloth
Asger Brendstrup
BY Spencer & Kaye
ATTORNEYS.

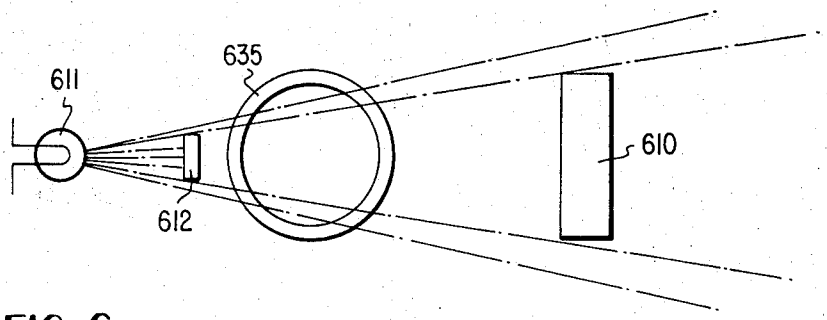

FIG. 6a

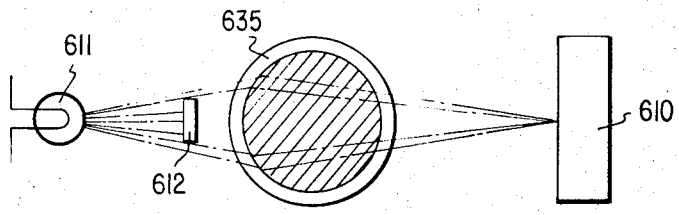

FIG. 6b

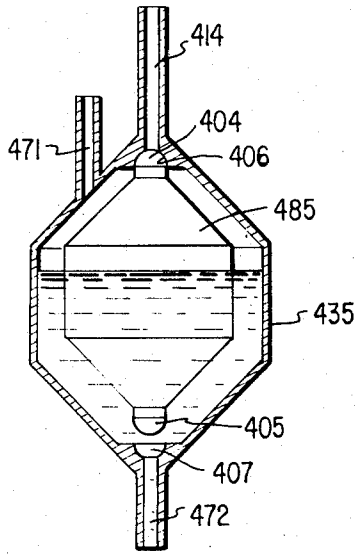

FIG. 4

INVENTORS.
Holger Hesse
Carl Sloth
Asger Brendstrup

BY Spencer & Kaye
ATTORNEYS.

INFUSION APPARATUS

The present invention is concerned with of liquids into veins, arteries or muscles of animal or human bodies over a longer period of time with more or less exact dosage of the quantities of liquid infused per time unit. Among the numerous fields in which a reliable method of this type will be applicable the following may be mentioned; pharmaceutical examinations; control of supply requirements concerning a drug or other required substance; positive or negative control of metabolic, such as kidney functions; continual medicament administration for therapeutic purposes; performance of intravenous anesthesia; so-called "extra corporal circulation", heart-lung machines and artificial kidneys.

In any application of an apparatus of this type precautions must be taken to prevent air bubbles from entering the body of the patient via the attached infusion apparatus.

Methods and apparatus are known for preventing air from entering into blood transfusion tubing systems when the blood container is running empty. However, so far no satisfactory system has been proposed to prevent bubbles from forming and migrating in systems in which the liquid is continuously pressed into the blood vessels or tissue of an animal or an human body under positive pressure such as by means of a pump or syringe. The difficulty in constructing a satisfactory device for this purpose is in part due to the necessity to have all mechanical devices sterilized before use and to be assembled under sterile conditions and to the fact that valves must be used to direct the liquid from the container to the pumping devices and the patient respectively, these factors involving risks of leaks by bad connections so that bubbles of air entering into the system may pass from the system into the body of the animal or person treated.

Various means have been proposed for the purpose of detecting individual air bubbles while passing through a tubing system of the type here in question. For example, electrodes may be provided in such a way that an air bubble passing through the system will interrupt the fluid connection between them; a photoelectric device may be provided to detect air bubbles passing; another control factor that may be used for this purpose is the dielectric value that may be changed by the passage of air bubbles between condenser plates. In all these cases a new difficulty will arise when air is present in the form of minute bubbles which individually may not be harmful but which may coalesce somewhere in the system to form bubbles large enough to involve fatal risks when entering into important arteries in the brain or other critical places in the body. This problem is not satisfactorily solved by so constructing the apparatus that a warning or control signal is produced by any minute air bubble appearing in the system because the high signalling frequency that may be caused thereby, in particular during startup, is definitely undesirable in connection with a continuous medical treatment.

It is a purpose of the invention to solve these and related problems previously encountered in connection with permanent infusion systems.

Basically an apparatus for performing continuous infusion of liquids into blood vessels or muscles of animal or human bodies over a longer period of time with a desired degree of exactitude of dosage comprises: A treating liquid supply container, a pump, such as a power-operated piston pump, and an infusion cannula adapted to inserted into the body of the animal or person to be treated. The above-mentioned parts are mutually connected by conduits or tubes which to the extent necessary are provided with valves. In accordance with the basic feature of the invention the apparatus further comprises a closed gas bubble-collecting vessel having a liquid inlet connected to said liquid pump and a liquid outlet connected to said cannula, the apparatus further including safety means responsive to the presence of a predetermined accumulated gas volume in said bubble-collecting vessel to produce a warning or control signal or to positively interrupt flow of liquid to said cannula.

An apparatus constructed according to this principle will promptly and safely react to the presence of dangerous gas volumes in the system while being unsensitive to the casual appearance of small air bubbles.

While any type of valve may be used in an apparatus of the type here in question the use of squeeze valves closing soft conduits by external compression is preferred for reasons of sterility and security. Such valves have no parts in communication with the inner sterile surfaces of the system and accordingly do not require sterilization when the apparatus is transferred from one patient to another. The use of squeeze valves also facilitates disassembly of the tubing system for cleaning or replacement.

One important aspect of this invention is the possibility of using cheap plastic tubing in the connections between the various vessels and the pump and cannula enabling such tubing to be simply discarded after use and saving a critical cleaning procedure before renewed use of the machine. This feature is of particular interest in combination with the use of squeeze valves consisting of pressure elements compressing the soft and resilient plastic tubing against a rigid stationary base.

A squeeze valve in combination with resilient tubing has the further advantage of reacting immediately in contrast to e.g. ball valves which will allow some liquid to pass in the reverse direction before closing completely whereby dosage may become uncertain.

A system designed in accordance with the present invention is suited to operate in a more or less automatic way which is desirable in normal clinical routine where the operators may not be fully qualified technicians.

In view of the great risks involved and, particularly, in order to safeguard against fatal failure of the electronic system an electronically controlled system according to the present invention may be provided with an automatic checking device periodically checking the electronic system and, in the case of a breakdown or improper function, stopping operation with or without emission of a warning signal. The basic feature of the present invention, viz. the provision of the closed bubble-collecting vessel, permits introduction of a beneficial time factor in the operation of the device, by so dimensioning said vessel and so predetermining said critical volume of accumulated gas that the volume of treating liquid present in the bubble-collecting vessel at any time is sufficient to maintain safe operation during extended intervals of time between, for example, issuance of a warning signal and final automatic stopping of the operation or between successive checking cycles of the automatic checking device.

The above and other objects and advantages of the invention will appear from the following detailed description by reference to the enclosed drawings of an infusion apparatus and some alternative details thereof embodying the basic and some subsidiary features of the invention.

In the drawings FIG. 1 is a front view representation showing the parts visible and accessible on the front side of the mounting panel of an infusion apparatus for medical purposes with attached liquid supply container and cannula.

FIG. 2 is a rearview rear view representation, showing the mechanism for operating the pump or syringe feeding the infusion liquid under pressure.

FIG. 3 is a schematic representation showing the mechanism for operating the various squeeze valves which close soft conduits by external pressure.

FIG. 4 illustrates an alternative, purely mechanically operating embodiment of the bubble-collecting vessel and safety means therein.

FIGS 5*a*, 5*b* and 5*c* illustrate three embodiments of the signalling mechanism cooperating with the bubble-collecting vessel, each adapted to be used in place of the float-operated mechanisms of respectively FIGS. 1 and 4.

FIGS. 6*a* and 6*b* illustrate a modification of the photoelectric device forming part of the apparatus shown in FIG. 1.

Attached to the front side of a vertically disposed panel of the support structure S of the medical infusion apparatus schematically shown in FIG. 1 is a liquid pump or syringe 28 from

which a piston rod 27 extends downwardly. A container 21 filled with a supply of treating liquid is provided independently of the support structure S in an elevated position in relation to pump 28. Container 21 is in communication with inlet port 26 of the pump 28 by a length 22 of flexible, resiliently compressible tubing of a cheap disposable plastic material. A squeeze valve comprising a laterally shiftable pressure element 23 and a cooperating stationary rigid base 24 is shown in its closing position in which tubing 22 is compressed between the pressure element 23 and the base 24.

Also attached to the support structure S of the apparatus is a cylindrical bubble-collecting vessel 35 having a transparent sidewall 155 and hermetically sealing top and bottom walls 42 and 70. Outlet port 29 of the pump 28 is connected to an inlet port 71 in the bottom wall 70 of vessel 35 by a length 30 of flexible, resiliently compressible tubing of the above-mentioned type, a squeeze valve comprising a laterally shiftable pressure element 32 and a cooperating stationary rigid base 31 being shown in its opening position in which tubing 30 is resiliently expanded between the pressure element 32 and the base 31. An outlet port 72 in bottom wall 70 of vessel 35 is connected by a length 37 of flexible, resiliently compressible tubing of the above-mentioned disposable type to an infusion cannula 40, a squeeze valve comprising a laterally shiftable double-acting, pressure element 153 and a cooperating stationary rigid base 38 being shown in its opening position in which tubing 37 is resiliently expanded between the left-hand portion of pressure element 153 and the base 38.

The portions of the tubings 22 and 37 shown in broken lines and extending between, on the one hand, container 21 and squeeze valve 23–24 and, on the other hand, between cannula 40 and squeeze valve 153–38 are not clamped to the support structure S of the apparatus and have a length permitting free relative movement of the apparatus proper in relation to the supply container 21 and of the cannula 40 in relation to the apparatus whereas the remaining tubing portions passing through the squeeze valves to and from the various outlets and inlets squeeze valve above are clamped to the support structure S in any suitable way to hold them fixed squeeze valve in relation to the valves and outlet and inlet connections.

Connected to an outlet in top wall 42 of vessel 35 is a venting conduit consisting of a length 41 of the above-mentioned tubing material communicating with a collecting bottle 45 via a squeeze valve comprising the previously mentioned double-acting pressure element 153 and a cooperating stationary rigid base 43, the squeeze valve being shown in its closing position in which tubing 41 is compressed between the right-hand portion of pressure element 153 and the base 43. The normal disposition of the double-acting pressure element 153 and the cooperating bases 38 and 43 as schematically indicated in FIG. 1 is such that one of the two squeeze valves is open when the other one is closed.

As shown in FIG. 2, the pump or syringe 28 is suspended on an upper bracket 53 which in turn is suspended on the forwardly extending arm of a two-armed lever 151 journaled in an aperture in the support structure S with the other arm extending to the rear for a purpose to be described later. The lower end of piston rod 27 is connected by means of a threaded pin 52 to the upper side of a horizontal lifting platform 50 which extends from a position below the syringe 28 on the front side of the apparatus through an elongated aperture in the support structure S to a position behind the support structure S where it is firmly connected to a vertically reciprocatable operating mass 92 resting with its lower end on the free forward end of a cam lever 93 pivoted for vertical swinging movement at its rear end in the support structure S and supported by a rotatable cam 94 carried by a shaft which is an extension of shaft 302 shown in FIG. 3 or is driven in unison therewith. Owing to the considerable weight (about 1 kg) of mass 92 the suction stroke of pump 28 will be gravity-operated, the stroke length being adjustable by means of an adjusting device schematically shown in FIG. 1 and shown in its proper functional position in FIG. 2, said adjusting device comprising a bracket 101 horizontally extending from support structure S to a position below platform 50, a stroke-length limiting adjusting screw 90 extending vertically through bracket 101 towards the underside of said platform 50 and a fixing screw 91 extending through bracket 101 into engagement with adjusting screw 90 to fix the same in any position of adjustment.

To avoid contamination or jamming due to thickening of adhering liquid the portions of the piston rod 27 extending downwardly from pump 28 towards platform 50 are protected by an extensible bellows 130.

The maximum filling volume of pump 28 permitted by the stroke-length adjusting device is indicated by a pointer 103 carried by platform 50 on a scale 102 provided on the front side of the support structure S.

The various squeeze valves shown in FIG. 1 are operated by means of a mechanism schematically shown in FIG. 3. A motor and reduction gear unit 301 drives a shaft 302 which may also be the shaft carrying cam 94. Shaft 302 further carries two cams 303 and 304 each adapted to cooperate with one of squeeze valve pressure elements 23 and 132, these latter elements here being shown in the form of knee levers journaled in the support structure S and biased by tension springs 323 and 332 respectively into engagement with the respective conduits 22 and 30 supported on bases 24 and 31 respectively. The shape and disposition of cams 303 and 304 is such that pressure element 32 is lifted by cam 304 against the action of spring 332 out of engagement with conduit 30 resting against base 31 while pressure element 23 is out of contact with cam 303 and is held by spring 323 in closing contact with conduit 22 resting on base 24, conditions being obviously reversed after 180° turn of the shaft 302. A release lever 305 is adapted upon depression of its one end by means of a key A accessible for manual operation from the front side of the apparatus simultaneously to hold, by means of pin and slot connections, both pressure elements out of squeezing contact with the respective conduits 22 and 30 independently of the angular positions of cams 303 and 304.

The double-acting pressure element 153 of the squeeze valves acting on conduits 37 and 41 extending between, on the one hand, the vessel 35 and the cannula 40 and, on the other hand, the vessel 35 and the venting bottle 45 is represented in FIG. 3 in the form of an knee lever journaled in the support structure S and having one arm urged by a tension spring 353 into normal closing contact with conduit 41 resting against base 43. A key B accessible for manual operation from the front side of the apparatus is provided to act on the free arm of lever 153 to swing it against the action of spring 353 to a position in which conduit 41 is temporarily allowed to open and conduit 37 is compressed against base 38.

In order to fill to system described above with treating liquid from the container 21 key A is manually operated whereby both conduits 22 and 30 are opened while conduit 37 is normally open and conduit 41 normally closed by the double-acting pressure element 153 as long as key B is not operated. Liquid from the container 21 is freely flowing through the system to the cannula 40 and will eventually emerge therefrom. Due to the presence of accumulated air and the closing of squeeze valve 43 vessel 35 will not be completely filled during this phase. The electronic or other safety system to be described later will respond to the presence of an excessive air volume in vessel 35 and will not permit the apparatus to be started for infusion treatment. The operator will now operate key B and the resulting changeover of the double-acting pressure element 153 will close the conduit 37 leading to the cannula 40 while opening the conduit 41 to vent vessel 35 and permit the liquid from container 21 to fill vessel 35 completely, the complete filling being evidenced by discharge of liquid from conduit 41 into venting bottle 45. Now key B is released and as there is no volume of accumulated air in the vessel 35 the safety system will no longer prevent the apparatus from being started by operation of start button 202. Key A may be coupled to key B to be held operated until key

B is operated or to be released simultaneously with release of key B. Obviously this system is effective to safeguard against faulty starting of the apparatus because filling of the vessel 35 will not take place unless the conduit leading to the cannula has been filled and the drive motor of the device cannot be started unless the vessel 35 has been filled.

The system also comprises means safeguarding against buildup of a superpressure, e.g. due to kinking in conduit 37 leading to the cannula or obstruction of the cannula port, or against other faults due to jamming of the pump piston in the pump cylinder, such jamming causing undue upward thrust during the pumping stroke and undue shortening of the stroke length during the filling stroke. In all such cases the pump cylinder carrying bracket 53 will be exposed to extraordinary strains in either direction which by the swinging suspension of bracket 53 on lever 151 may be used to operate a warning or control system such as shown in FIG. 2. The free rear end of lever 151 is biased by means of opposed springs 152 and 154 to a neutral position maintained under the thrust and pulling strains appearing during normal pump operation. When thrust or pulling strains become strong enough to overcome the balancing action of springs 154 and 152 respectively the respective one of two opposed electrical contacts 215 and 216 will be operated to produce a warning or control signal.

Further visible on the front side of the apparatus are a stop button 204 and signalling lamps 217 and 218, green light from lamp 217 indicating normal operation and red light from lamp 218 indicating an emergency state or stop due to faults. The control system may further comprise a counter 112 indicating operating time or number of drive shaft revolutions and thereby total volume of liquid pumped.

Now turning to the safety device incorporated into the apparatus in accordance with the present invention reference is first made to the combined photoelectric and float arrangement shown in FIG. 1. An opaque float 85 is provided in the vessel 35. At any liquid level corresponding to accumulated air volumes less than a predetermined volume the float 85 is supported on a level in which it intercepts a beam of light from a lamp 211 which otherwise would pass through a diaphragm 156, diametrically through the air-filled upper part 80 of vessel 35, through another diaphragm 157 and onto a photoelectric element 210. When due to excessive accumulation of air in space 80 float 85 has been lowered sufficiently to allow the light beam from lamp 211 to reach element 210 a circuit into which this element is connected will be caused to produce a warning or control signal, involving for example lighting of red lamp 218 and simultaneous or subsequent stopping of motor 301, either measure possibly being accompanied by the emission of an acoustic warning signal. An electronic circuit suitable to respond in such or a similar way to the operation of element 210 due to illumination from lamp 211 can be designed by any expert on the electronic field.

FIG. 4 illustrates a safety device of a purely mechanical character. The air-collecting vessel 435 shown there may be substituted for vessel 35 shown in FIG. 1 by connecting its lower outlet 472 via conduit 37 to cannula 40 and by connecting inlet 471 via conduit 30 to pump outlet 29 or directly to the outlet of vessel 21 for gravity supply of liquid. Upper outlet 441 serves as a vent. A float 485 is provided within vessel 435. Both vessel 435 and float 485 have conical end portions connected by a cylindrical intermediate portion, the opposite ends of the float being provided with upper and lower hemispherical valve elements 404 and 405 adapted to be seated on corresponding seats 406 and 407 provided within vessel 435 around the inner ends of vent outlet 441 and liquid outlet 472. The float 485 will be in the position shown in which it opens liquid outlet 472 and closes vent outlet 441 as long as the volume of accumulated air in vessel 435 is less than a predetermined volume. In the presence of said predetermined volume of accumulated air the liquid level will be so low that the float closes liquid outlet 472 and opens vent 441. Excess air will now be discharged, the liquid level will rise and the float will be restored to the position shown in which liquid is fed to the cannula.

Alternative embodiments of the safety device on an electric or electronic basis are illustrated in FIGS. 5a, 5b and 5c. In all the three FIGS. the air bubble-collecting vessel is only schematically shown without liquid or vent connections.

As shown in FIG. 5a an upper electrode 501 is provided in vessel 535 A substantially on or slightly above the liquid level corresponding to the presence of said predetermined accumulated air or gas volume. Another electrode 502 is disposed further down in the vessel 535 A. A circuit for producing a warning or control signal comprises a signalling device AA and a transistor or electronic tube 503 the base or grid of which is negatively biased in a circuit including electrodes 501 and 502. When the liquid level is depressed by accumulated air below electrode 501 the connection between electrodes 501 and 502 will be broken and the negative bias will be removed from element 503 causing the main circuit to actuate the signalling device AA.

As shown in FIG. 5b three electrodes 504, 505 and 506 are provided within vessel 535 B in an equilaterally triangular distribution with the top electrode 504 disposed substantially on or slightly above the liquid level corresponding to the presence of said predetermined accumulated air or gas volume and the two other electrodes 505 and 506 disposed on a common lower level. The electrodes 504, 505 and 506 are connected in a bridge circuit comprising a signalling device AB emitting a warning or control signal in response to unbalance in the bridge circuit. While the bridge is in equilibrium as long as all the electrodes are submerged, the bridge will be unbalanced and the signalling device actuated by an accumulation of air depressing the liquid level below top electrode 504 causing the resistance R_1 between the top and bottom electrodes to increase while the resistance R_2 between the two bottom electrodes remains unchanged.

The embodiment illustrated in FIG. 5c also makes use of a bridge circuit comprising a signalling device AC emitting a warning or control signal in response to unbalance in the bridge circuit. One bridge arm comprises a condenser C having a constant value which is the same as the value of a condenser C_1 in another bridge arm, this latter condenser C_1 being formed by condenser plates 507 and 508 disposed on the same level within vessel 535 C and the liquid dielectric between said plates. The plates 507 and 508 extend downwardly substantially from the liquid level corresponding to said predetermined accumulated air or gas volume. If the liquid level is further depressed by accumulation of air or gas some portions of the condenser plates 507 and 508 will emerge from the liquid whereby the value of condenser C_1 will be changed, the equilibrium of the bridge circuit will be disturbed and the signalling device AC will be actuated.

FIGS. 6a and 6b are schematic top views illustrating an electro-optical embodiment of the safety device according to the invention.

Disposed to one side of the transparent air or gas bubble-collecting vessel 635 is an electric lamp 611 radiating a beam of light towards the vessel substantially on the liquid level within vessel 635 corresponding to the presence of said predetermined accumulated air or gas volume. Opposite to lamp 611 and on the same level there is disposed a photoelectric element 610 connected in a circuit (not shown and obvious to the expert) which is inactivated as long as the photoelectric element 610 is exposed to concentrated illumination from lamp 611 and which will be caused to produce a warning or control signal when the electric condition of said element is changed by interruption of said concentrated illumination. The central portion of the beam emitted from lamp 611 is prevented from passing through the central area of said vessel 635 and reaching element 610 by a screening element 612. However, as long as there is a column of liquid in said vessel 635 above said critical level the portions of the beam passing outwardly of the screening element and going through the outer portions of the vessel 635 and the liquid therein will be deflected and concentrated onto the photoelectric element 610 as shown in FIG. 6b thus inactivating the circuit. If due to the presence of an increased volume of air within vessel 635

no light-deflecting liquid column will be disposed in the path of the beam from lamp 611 no light will be focussed onto element 610 and the circuit will respond to the change electrical state of element 610 by producing a warning or control signal.

Other electrical, electro-optical and equivalent embodiments of the safety device will be readily apparent to the expert and are intended to be comprised by the attached claims.

We claim:

1. An apparatus for performing continuous infusion of liquids into veins, arteries, and muscles of living bodies, comprising a treated liquid supply container, liquid-feeding pump means having an inlet and an outlet, a closed gas bubble-collecting vessel having an inlet and an outlet, an infusion cannula adapted to be inserted into the body to be treated, liquid conduits connecting respectively said supply container with the inlet of said liquid-feeding pump means, the outlet of said pump means with the inlet of said gas bubble-collecting vessel and the outlet of said gas bubble-collecting vessel with said cannula, first control valve means inserted between said liquid supply container and the inlet of said pump means, and second control valve means inserted between the outlet of said pump and the inlet of said bubble-collecting vessel, safety means responsive to the presence of a predetermined accumulated gas volume in said bubble-collecting vessel to produce a control signal for indicating the presence of said predetermined gas volume, said first and second control valve means being adapted to be operated in timed relation to the operation of said pump to open during the suction action of said pump means said first control valve means while closing said second control valve means and to close during discharge action of said pump said first control valve means while opening said second control valve means, a liquid-collecting vessel, a liquid conduit connecting said collecting vessel and said gas bubble-collecting vessel, and double-acting valve means for closing said conduit to said collecting vessel and for simultaneously opening said conduit between said gas bubble-collecting vessel and said cannula and for opening said conduit to said liquid collecting vessel while simultaneously closing said conduit to said cannula.

2. The apparatus as claimed in claim 1 in which both said liquid inlet and outlet are provided near the bottom of said bubble-collecting vessel.

3. The apparatus as claimed in claim 1 in which third control valve means are provided between the outlet of said bubble-collecting vessel and said cannula.

4. The apparatus as claimed in claim 1 wherein said liquid conduits are made of resiliently deformable material, and said control valve including a squeezing means for closing said conduits by compression and allowing them to resiliently open upon the release of said compression.

5. The apparatus as claimed in claim 4 in which said liquid conduits are in the form of disposable plastic tubing and that said control valve means are pressure elements movable to compress such tubing between a stationary support and an edge on the element.

6. The apparatus as claimed in claim 1 wherein said pump means is a piston pump.

7. The apparatus as claimed in claim 6 wherein the volume of liquid present in said bubble-collecting vessel in the presence of said predetermined accumulated gas volume is greater than the volume of liquid fed during one discharge stroke of said piston pump.

8. The apparatus as claimed in claim 1 wherein said safety means includes a float valve provided within said bubble-collecting vessel, and means mounting said float valve to close the outlet of said vessel leading to said cannula when at least said predetermined accumulated gas volume is present and for leaving said outlet open when said predetermined accumulated gas volume is not present.

9. An apparatus as claimed in claim 1 wherein said safety means include a float provided within the bubble-collecting vessel, photo electric means including a light beam positioned to be interrupted by said float in one position, and not to be interrupted in another position, and means for producing a control signal in response to a change in said float from said one position to said other position.

10. The apparatus as claimed in claim 1 wherein said safety means include an electronic circuit actuatable to cause a control signal to be produced, said circuit comprising a pair of spaced contacts disposed one above the other within said bubble-collecting vessel, the upper one of said contacts being disposed substantially on a liquid level corresponding to said predetermined accumulated gas volume whereby the circuit between said upper and lower contacts is closed through said liquid only when there is an accumulated gas volume less than said predetermined accumulated gas volume in said vessel.

11. The apparatus as claimed in claim 1 wherein said safety means include an electrical bridge circuit adapted to be unbalanced causing a warning or control signal to be produced, said bridge circuit including spaced contacts each connected to a different bridge arm and one disposed above any other of said contacts within said bubble-collecting vessel, said upper one of said contacts being disposed substantially on the liquid level corresponding to said predetermined accumulated gas volume to be in circuit-balancing connection with any other of said contacts through said liquid only when there is an accumulated gas volume less than said predetermined accumulated gas volume in said vessel.

12. The apparatus as claimed in claim 1 wherein said safety means include an electrical bridge circuit adapted to be unbalanced causing a control signal to be produced, said bridge in one arm comprising a constant value capacitor and then in another arm capacitor means comprising spaced condenser plates disposed within said bubble-collecting vessel such as to extend downwardly from the liquid level corresponding to said predetermined accumulated gas volume and spaced from each other a distance corresponding to the presence of a bridge-balancing dielectric liquid layer between said plates only as long as the plates are fully submerged in said liquid.

13. The apparatus as claimed in claim 1 wherein said bubble-collecting vessel has transparent wall portions in the range of the interface between the liquid and said predetermined accumulated gas volume, said safety means including a light source disposed externally adjacent to said transparent wall portions, an electronic circuit including a photosensitive device responsive to the interruption of a focused beam of incident light from said light source to cause the circuit to produce a control signal, said photosensitive device being disposed externally adjacent to said transparent wall portions and substantially opposite to said light source, a light obstructing member disposed between said light source and transparent wall portions acting to prevent light from said source from falling onto said photosensitive device directly through said transparent wall portions, said light source and photosensitive device being disposed on such a level relative to said transparent wall portions that a liquid column will be disposed in the path of the light only when the liquid level corresponds to accumulated gas levels less than said predetermined accumulated gas level, said light source, light obstructing member and photosensitive device being optically disposed so that light passing from the light source passed said light obstructing member and through said transparent wall portions and a column of liquid enclosed therein will be focused onto said photosensitive device to hold said circuit unaffected.

14. The apparatus as claimed in claim 1 wherein said safety means include electrical means for cutting off the power supply to said pumping means, and automatic checking device for periodically checking the electric elements of said safety means and in the case of a breakdown or an improper function to stop operation of the apparatus.

15. The apparatus as claimed in claim 1 including means responsive to said control signal from said safety means for interrupting operation of said pump.

16. The apparatus as claimed in claim 1 including means responsive to said control signal from said safety means for producing warning signals perceptible to a human being.

UNITED STATES PATENT OFFICE

CERTIFICATE OF CORRECTION

Patent No. 3,543,752 Dated December 1st, 1970

Inventor(s) Holger Hesse, Carl Sloth and Asger Brendstrup

It is certified that error appears in the above-identified patent and that said Letters Patent are hereby corrected as shown below:

In the heading of the patent, line 9, change "Leo" to --Lea Column 1, line 2, after "with" insert --infusion--; line 62 after "adapted to" insert --be--. Column 2, line 54, after "FIG. 1 is a" insert --schematical--; line 58, change "rearview" to --schematical--. Column 3, line 39, change "squeeze valve" to --mentioned--; line 40, change "fixed squeeze valve" to --in fixed positions--; line 43, change " to --41--. Column 4, line 61, after "valve" insert --153-

Signed and sealed this 6th day of April 1971.

(SEAL)
Attest:

EDWARD M.FLETCHER,JR.
Attesting Officer

WILLIAM E. SCHUYLER, JR.
Commissioner of Patents