W. J. GEE.

APPARATUS FOR SEPARATION BY THE ACTION OF CENTRIFUGAL FORCE.

APPLICATION FILED NOV. 1, 1912.

1,065,519. Patented June 24, 1913.

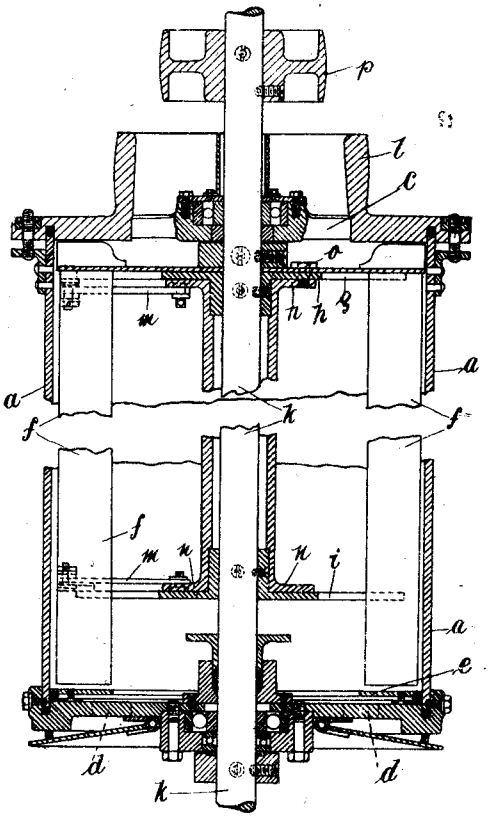

Fig 1

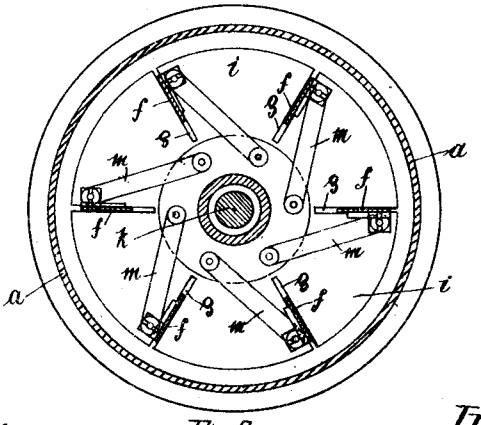

Fig 2

Witnesses.
Jesse B. Heller.
G. B. Blemung

Inventor
William John Gee
by Bakewell, Byrnes & Parmelee
Attys

UNITED STATES PATENT OFFICE.

WILLIAM JOHN GEE, OF TULSE HILL, LONDON, ENGLAND.

APPARATUS FOR SEPARATION BY THE ACTION OF CENTRIFUGAL FORCE.

1,065,519. Specification of Letters Patent. Patented June 24, 1913.

Application filed November 1, 1912. Serial No. 729,012.

To all whom it may concern:

Be it known that I, WILLIAM JOHN GEE, engineer, subject of the King of England, residing at 48 Kingsmead road, Tulse Hill, London, S. W., England, have invented new and useful Improvements in Apparatus for Separation by the Action of Centrifugal Force, of which the following is a specification.

This invention relates to apparatus for separation by the action of centrifugal force, in which the materials to be treated are crushed or powdered or otherwise sufficiently finely divided to be suspended in liquid, and are passed together with the liquid, usually water, through a centrifugal separator.

The invention consists chiefly in imparting to a freely suspended annular wall of liquid, by positive means, such as rotating blades, a considerable circumferential velocity along or with regard to the rotating surface upon which the heavier particles or the particles having a higher specific gravity are to be deposited. The annular wall is of considerable thickness and is supported by means of a weir-plate arranged near the outlet end of said drum; the positive means for rotating said wall consisting of blades extending radially from a central shaft into said wall and being capable of adjustment in the radial direction. Between these blades there are therefore centripetally unobstructed spaces. The annular column of liquid is rotated as far as possible as a whole at a velocity practically equal to the velocity of the driving means, and it is smoothly and uniformly impelled instead of being stirred or agitated.

With the present apparatus, the relative velocity of the liquid with regard to the separating surface may be accurately determined beforehand, independently of the density of the liquid or other varying factors such as surface friction. Moreover, as the driving blades do not close internally the passage for the liquid, there is absolutely no possibility of the separator becoming clogged. By varying the speeds of the outer drum containing the separating surface and of the internal blades, and their ratio to one another, and by varying the rate of flow through the apparatus, the process can be very accurately adjusted to fulfil the conditions necessary to give the best result with any material to which the process is applicable.

The accompanying drawings illustrate an apparatus suitable for carrying out the improved process.

Figure 1 is a sectional elevation, Fig. 2 a cross section.

The apparatus may consist of a drum or cylinder *a* mounted so as to rotate on its longitudinal axis with an inlet *c* at one end and an outlet *d* at the other. A weir-plate *e* near the outlet end with a hole in the middle thereof provides for an annular wall of liquid to be always retained on the inside of the drum, while rotating at a sufficient speed. Radial blades or vanes *f* are provided within but clear of the inner surface of the drum, and may if necessary be adapted to be moved radially so that the grip of these vanes or blades on the wall of liquid may be varied. The blades or vanes *f* may be guided in radial slots *g* of two disks *h* and *i* fixed to the shaft *k* around which the outer drum is rotated, for instance by means of a pulley *l*, the inner hole of which forms the feeding channel. The vanes may be adjusted by means of links *m* pivoted at the outer ends to the wings and pivotally connected at the inner ends to flanges *n* of a tubular shaft rotatably mounted upon the hubs of the disks *h* and *i*. A bolt *o* may be used for fixing the vanes in their adjusted positions. Suitable bearings are provided for supporting the drum upon the shaft and for mounting the shaft, the latter bearings not being shown in the drawing. The pulley for driving the shaft is indicated at *p*. The bottom of the drum is of course provided with one or more openings for the discharge of the liquid.

The method of operating the apparatus may be as follows:—The desired speed of rotation of the parts is first attained and then preferably clean water is fed into the drum until an effluent is obtained at the outer end. Water containing the material to be treated is then fed in, whereupon particles of greater specific gravity (for instance, ore concentrates) will be deposited on the inner surface of the drum, while particles of lesser specific gravity will remain suspended and pass away with the water at the outlet. When a sufficient deposit has

been attained, the inflow is again preferably changed to clear water and the flow of clear water continued until the effluent is clear. The recovered material in the drum is then removed and the operation repeated. In some cases it may be found desirable to submit the material to two or more successive treatments in order to secure a high degree of extraction or concentration, and in this way either the effluent or the material recovered in the drum or both may be retreated.

It will be understood that it is necessary upon treating any given material for the first time that some trial must be made in order to adjust the apparatus to give the best results; that is to say, the highest efficiency in extraction of heavier particles and the smallest possible admixture of gangue or lighter particles with the concentrates remaining in the drum. These adjustments may vary for different materials, but once the correct conditions have been ascertained for any given material they will as a rule remain constant for that material. It may, for instance, be arranged that, after the desired charge has accumulated in the drum, and the inflow of clean water has caused the effluent to become clear, the speed of rotation of the vanes or blades be increased. This increased washing effect will cause the materials deposited on the drum to become resuspended in the water and, by reason of the continued inflow to pass out of the drum, the arrangement being altered at the time of commencing the discharge so as to connect the delivery with a settling tank or reservoir. When the effluent from the apparatus is observed to be as clear as is desired, the increased action of the blades is discontinued, the discharge end is disconnected from the tank or reservoir, the inflow is reconnected to the untreated material and the cycle of operation is repeated.

It will be understood that it is difficult to give exact data as to the correct speeds of rotation of the drum and the water within it respectively, as these will vary for every sample or ore. But the difference between the two will always be a considerable one, as it is not the object of the invention to produce a very slow circumferential or spiral movement of the deposited mass along the separating surface, but to use a circumferential force which substantially assists the settling of the heavy particles while continuously carrying away the lighter particles. It is obvious that if a small circumferential force were used the result aimed at by the present invention could not be obtained. For instance, in treating a certain wolfram ore, in a fairly finely divided state, the best result was obtained with a speed of drum of 200 revolutions per minute, and a speed of the vanes within the drum of 425 revolutions per minute, the diameter of the drum being in this case 18 inches. In adjusting the apparatus to any given ore, the metallurgist in charge of the machine may conveniently start with a vane speed of twice the drum speed. If the material discharged as concentrates contains gangue to too great an extent, (it will seldom be possible to obtain a perfectly clean concentrate—a commercially useful result is what is to be aimed at) that would indicate that a higher vane speed is required. On the other hand, if it is observed that the waste-water contains metallic particles, which it is deemed desirable to save, as well as gangue, the rate of feed should first be reduced, in case it should happen that the rate of flow through the drum is too rapid for the full separating effect to take place, and if this reduction of the rate of flow does not stop the loss, then a higher drum speed might be required. The proportions of suspended matter to water in the mixture fed into the machine, will also vary with different materials. I find it convenient to commence with a dilute mixture say 1% by weight of suspended solids, and then gradually to increase the proportion until the results obtained indicate that the maximum proportion of suspended solids has been reached, which the circumstances of the case require. It will generally be best to use as large a proportion of suspended solids as possible, as the efficiency of the apparatus, judged from the point of the quantity of ore treated in a given time, depends on this factor to a considerable extent. In some cases also it is of importance from the point of economy of water. The degree of comminution of the ore will be determined by the fineness, and to some extent, the friability, of the metallic particles contained therein. The chief aim should be to insure as far as may be commercially practicable that the particles of metallic or heavy matter are parted from the lighter material, or gangue, and exist in the mixture as separate particles, instead of as composite particles, as they will generally be present as the result of imperfect comminution. Whereas by the present methods the degree of comminution which is commercially practicable is limited by the efficacy of the concentrating plant, the object sought by this process is to remove all limits as to the degree of comminution, except those which are imposed by the question of cost.

Claims:

1. An apparatus for separating material by centrifugal force comprising a rotary drum provided with a separating surface adapted to receive and retain the particles of material, means for rotating said drum, a weir-plate near the outlet end of said drum adapted to support a freely suspended annular wall of liquid, and centripetally un-

obstructed means for positively rotating said annular wall at a higher velocity than the drum; substantially as set forth.

2. An apparatus for separating ore by centrifugal force comprising a rotary drum provided with a separating surface adapted to receive and retain the particles of ore, means for rotating said drum, a weir-plate near the outlet end of the drum adapted to support a freely suspended annular wall of liquid, a central rotating shaft in said drum, blades extending radially from said shaft into said annular wall of liquid, there being centripetally unobstructed spaces between said blades, and means for rotating said shaft and blades; substantially as set forth.

3. An apparatus for separating material by centrifugal force, comprising a rotary drum provided with a separating surface adapted to receive and retain the particles or ore, a weir-plate near the outlet end of said drum adapted to support a freely suspended annular wall of liquid, rotary blades extending radially into said annular wall, there being centripetally unobstructed spaces between said blades, and means for adjusting said blades in a radial direction, substantially as set forth.

4. An apparatus for separating material by centrifugal force comprising a rotary drum provided with a separating surface adapted to receive and retain the particles of material, a weir-plate near the outlet end of said drum adapted to support a freely suspended annular wall of liquid, rotary blades extending radially into said annular wall, there being centripetally unobstructed spaces between said blades, means for adjusting said blades in a radial direction, and means for locking said blades in their adjusted positions; substantially as set forth.

5. An apparatus for separating ore by centrifugal force comprising a rotary drum provided with a separating surface adapted to receive and retain the particles of ore, a weir-plate near the outlet end of said drum adapted to support a freely suspended annular wall of liquid, a central rotating shaft in said drum, disks on said shaft, there being radial slots in said disks, blades guided in said slots, there being centripetally unobstructed spaces between said blades, and links pivotally connecting said blades to said shaft, substantially as set forth.

In testimony whereof I have signed my name to this specification in the presence of two subscribing witnesses.

WILLIAM JOHN GEE.

Witnesses:
HOWARD C. ELLIOTT,
O. J. WORTH.