May 17, 1966 W. H. SHERRILL 3,251,151

PORTABLE DISPLAY DEVICE

Filed July 9, 1963 2 Sheets-Sheet 1

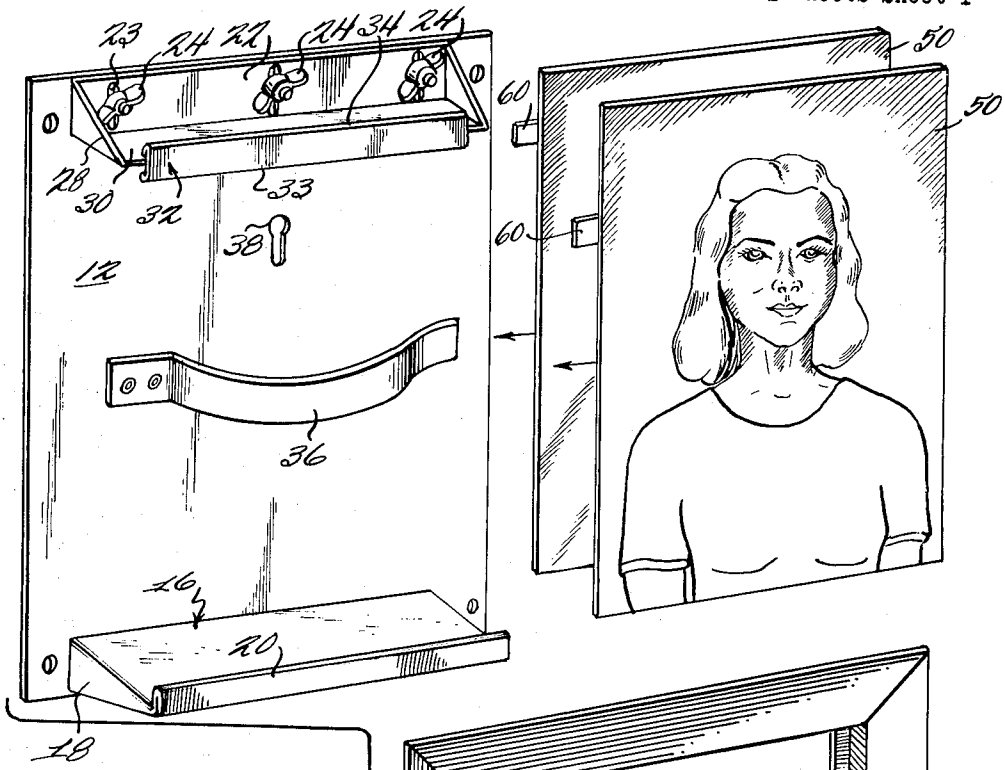


Fig. 1

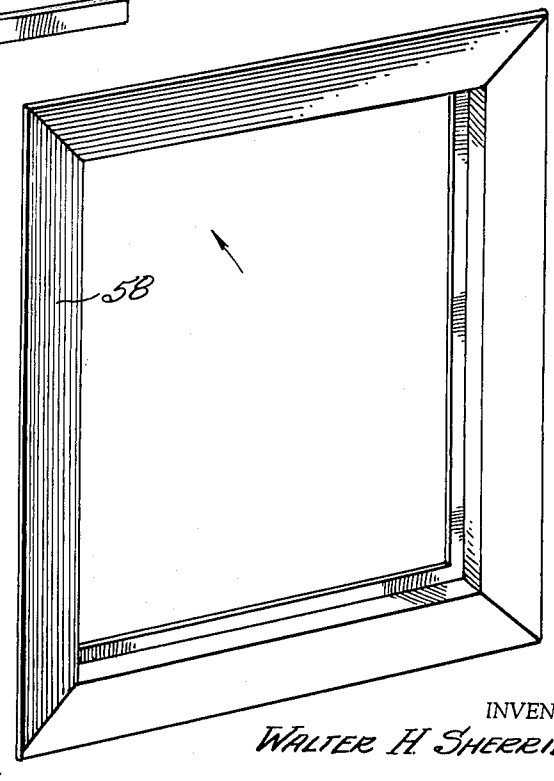


Fig. 4

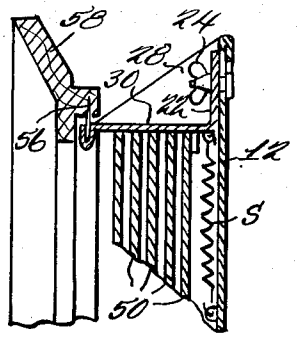


INVENTOR
WALTER H. SHERRILL

BY
Cushman, Darby & Cushman
ATTORNEYS

May 17, 1966 W. H. SHERRILL 3,251,151

PORTABLE DISPLAY DEVICE

Filed July 9, 1963

2 Sheets-Sheet 2

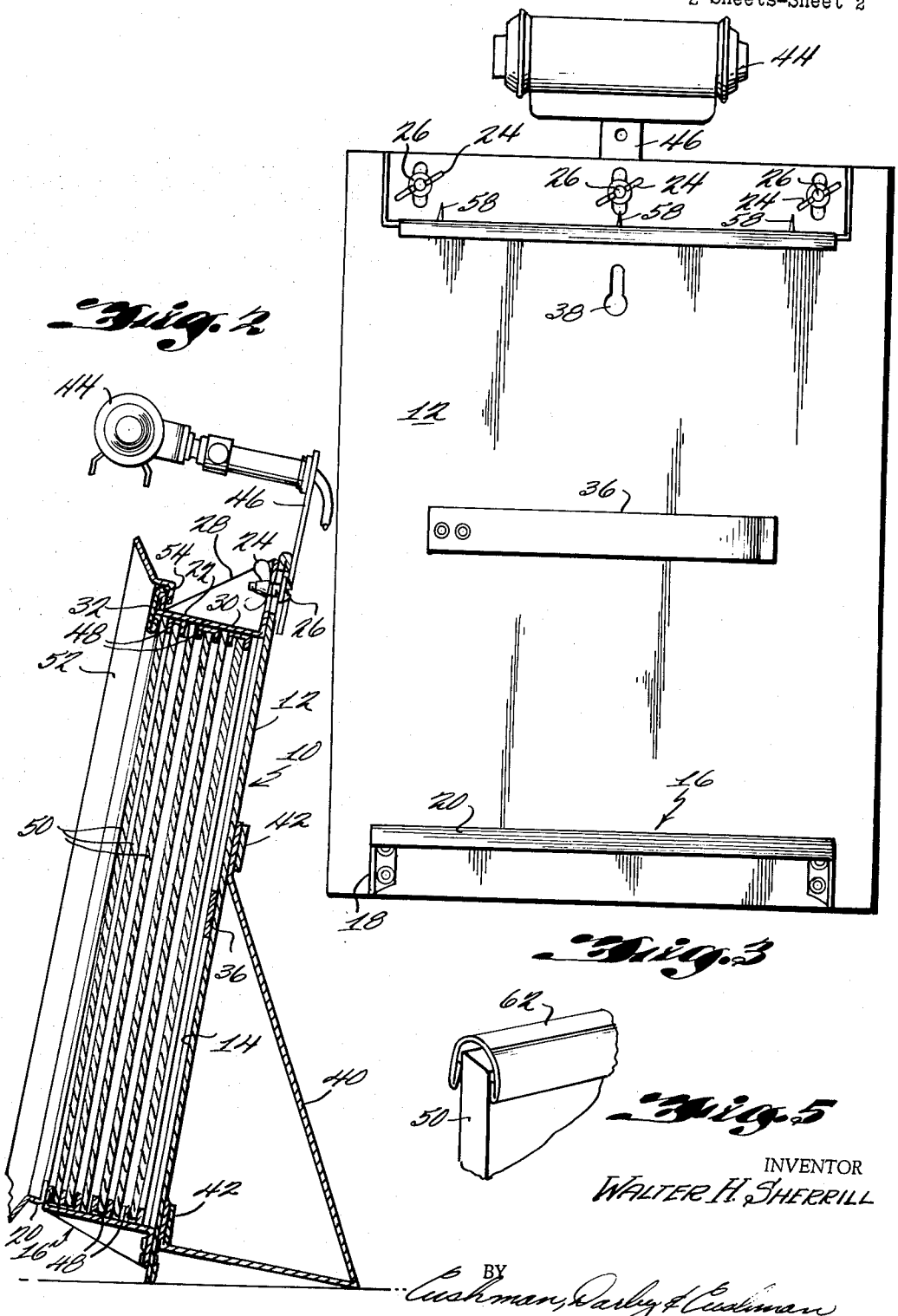


Fig. 1

Fig. 2

Fig. 3

Fig. 5

INVENTOR
WALTER H. SHERRILL

BY Cushman, Darby & Cushman
ATTORNEYS

United States Patent Office 3,251,151 Patented May 17, 1966



3,251,151

# PORTABLE DISPLAY DEVICE

Walter H. Sherrill, P.O. Box 74, Gastonia, N.C.

Filed July 9, 1963, Ser. No. 293,767
5 Claims. (Cl. 40—152)

This invention relates to display devices and more particularly to portable displays for sheet material such as placards and photographs.

Professional persons such as hairdressers, artists, photographers, cosmeticians, opticians, restauranteurs and the like have found benefit from displaying at their places of business and elsewhere, photographs or other likenesses and representations of the appearance of their product or the result of their services. It has been found that these displays are more effective when they are attractively framed and when they are changed often enough to maintain the attention of regular passers-by. Displays of this nature are also useful to other professional persons such as teachers, lecturers, instructors and the like who desire to hold the attention of their audience while illustrating their dissertation with visual material placed on placards, diagrams, photographs, blueprints or the like.

It is a primary object of the present invention to provide a display device for interchangeable placard-like displays which includes a frame that is carried by the display device and can be easily changed for another without disturbing the remainder of the display.

It is another object of the invention to provide a display device adapted to hold a plurality of displays, one behind the other in spaced relation, in which one or more of the displays can be withdrawn from the display to expose others of the displays to view.

Yet another object of this invention is to provide a display device simulating a framed portrait, in which either the frame or the portrait portions of the display can be changed for other frames or portraits without disturbing the remaining portions of the display device.

Still another object of the present invention is the provision of a display device of the character described, that is portable, can be hung on a wall or supported on a table, and can accommodate displays of varying sizes.

A further object of the invention is to provide a display device of the character described having means to space the placard-like displays from one another and reinforcing means on the edges of the displays to cooperate with the spacing means and prevent undue wear on the displays as they are interchanged.

These and other objects of the invention will appear and be more fully set forth in the following detailed explanation having specific reference to the attached drawing wherein embodiments of the invention are shown, not to limit the scope thereof in any respect, but in order that the principles thereof might be more easily understood.

In the drawings:

FIGURE 1 is an exploded perspective view of an embodiment of the novel display device;

FIGURE 2 is a side elevation view of a first modification of the device;

FIGURE 3 is a front elevation view of the device of FIGURE 2 having the displays and frame removed;

FIGURE 4 is a fragmentary side elevation view similar to FIGURE 2 showing a second modification of the device with parts in section; and

FIGURE 5 is a fragmentary perspective view of a display having a preferred form of reinforcement thereon.

A display device embodying the principles of this invention is illustrated at **10** in FIGURE 2. As shown, the device **10** includes a backing plate **12** which may conveniently be formed from relatively stiff sheet material,



such as metal, plastic, composition board, cardboard or the like, depending on the desired durability. Secured to the front face **14** of the backing plate **12** is an L-shaped support **16** which extends generally perpendicularly from the plate. The support, as illustrated, comprises a sheet of bendable material such as metal having generally triangular braces **18** formed by bending the sheet downwardly at the sides thereof. The leading edge of the support **16** is preferably bent upwardly to form a flange **20** extending in a plane generally parallel to the backing plate **12**. It should be realized that the support **16** could be formed by alternative methods, such as injection molding from plastic material. The support **16** is preferably fixedly secured to the backing plate **12** as by riveting, spot welding, bolting or any other conventional technique, although in the interest of greater portability, the support **16** may be removably mounted as by a tongue and groove arrangement, pin and slot, or bolt and wing nut.

A second support **22** is preferably removably and adjustably mounted adjacent the upper edge of the backing plate **12** as by wing nuts **24**, bolts **26** extending through elongated vertically extending slots **23** in the support **22**. The support **22** is most conveniently formed similarly to the support **16** including triangular braces **28** having an L-shaped configuration with one leg **30** thereof projecting substantially perpendicularly from the outer surface of the backing plate so that its lower surface is generally parallel to the upper surface of the support **16**. A flange **32** is preferably formed at the outer extent of the support **22** as to have a portion **33** extending downwardly toward the support **16** and a second portion **34** extending upwardly from the leg **30**.

A spring such as a leaf spring **36** is mounted on the backing plate intermediate the supports **16** and **22** as by riveting, spot welding and the like, for purposes more fully described hereinafter.

As best shown in FIGURES 2 and 3, alternate means, such as a key-hole slot **38** and a standard **40** removably engageable with slotted straps **42**, may be provided to support the display device **10** in an upright manner, as by hanging on a wall or standing on a table.

Additionally, a light **44** may be provided for the display device, as by securing its bracket **46** to the securing means **24**, **26** of the upper support member **22**.

In the preferred form shown in FIGURES 2 and 3, a plurality of pairs of oppositely disposed channels **48** are provided in the form of generally U-shaped member extending parallel to one another on the lower surface of the upper support **22** and the upper surface of the lower support **16**.

In use, a plurality of placard-like displays **50** are slidably received between the upper and lower supports in the cooperating channels **48** mounted thereon. The channels serve to isolate the displays from one another so that the rear surface of one display does not damage the front of the display behind it. A picture frame **52** having hanging means, such as a ledge or hook **54** on the back surface of one edge thereof, is then hung on the upwardly-directed flange **34** so that the display when viewed from the front has all the appearance of a framed illustration, portrait or the like.

When it is desired to exchange the display being presented to view for another, the order of the displays **50** can be changed by simply slidably withdrawing the top or forwardmost display or sliding another in front of it into an empty pair of oppositely disposed channels **48**.

When it is desired to substitute a different frame for the one being displayed, the frame **52** is lifted from the flange **34** and another hung thereon in its place. It should be noted that the frame can be changed with-

out disturbing the displays and that the displays can be changed without disturbing the frame.

The forms of the display device shown in FIGURES 1 and 4 are especially adapted to receive wooden picture frames. In these embodiments the upwardly-directed flange portion has been replaced by a plurality of upwardly-directed sharp end pins 56 which slightly penetrate a wooden picture frame 58 removably supported thereon to give the displays the effect of being framed by a wooden frame.

As illustrated in FIGURES 1 and 4, the channels 48 can be removed or omitted to reduce the cost of the display device, and, in that case, the leaf spring 36 acts on the rear of the rearmost display to urge the displays toward the front of the device so that the frontmost display is retained by the flanges 20 and 32.

Various identifying means, such as tabs 60, may be secured to the displays so that the display changer can be sure of which display he desires to use without the necessity of withdrawing each display to look at it. The tabs 60 are preferably of a size and placement so as to be observable from the side of the display but hidden from viewers in front of the device by the frame.

Referring again to FIGURES 2 and 3, the upper support 22 is movable vertically to accommodate displays that differ somewhat in height, as by loosening the wing nuts 24, moving the support and again fastening the nuts. In the modified form shown in FIGURE 4 a coil spring S in tension is mounted between the support 22 and the backing plate 12 so that the support will be biased downwardly into engagement with the displays carried between the support 16 and the support 22.

If it is contemplated that the displays will be changed often, and it is desired to protect the edges and corners of the same, suitable reinforcing means, such as the frictionally-engaging member 62, shown in FIGURE 5, may be mounted thereon. These members 62 can conveniently be formed from metal or other materials, such as self-lubricating thermoplastic, to also aid the displays in sliding with respect to supports 16 and 22 and cooperating channels 48.

From the above description it should be clear that the display device of the present invention provides a notably superior means for interchangeably displaying a plurality of photographs, charts, diagrams, menus and other placard-like displays in an attractive manner, framed by interchangeable picture-frame means which can be changed without disturbing the displays.

It should also be clear that the means provided herein for lighting the displays is not disturbed when frames or displays are interchanged on the device, and that the device, when disassembled, is quite compact and portable.

It is apparent that displays embodying principles of this invention might quite profitably be employed by persons, such as professional photographers, in order to show patrons how their picture would look framed with various frames, or to show the patrons how various types of portraits are complemented by a particular frame. As noted above, the displays of the invention are usable to a distinct advantage not only by photographers but also by other artisans, educators, professional persons and purveyors of goods and services.

Although the embodiments shown in the drawings and discussed above constitute preferred forms of the display device of the invention, their purpose is to illustrate the principles of this invention and not to limit the scope of the invention in any manner. It should be apparent that many modifications may be made on the modifications shown without departing from the principles as taught herein and, therefore, the compass of this invention should be limited only by the spirit and scope of the claims appended hereto.

I claim:

1. A display device comprising: a backing plate; first and second supports spaced from one another and secured to the backing plate as to extend from one surface of the backing plate; a plurality of placard-like displays slidably and supportably received between said supports in a horizontally stacked fashion; means on at least one of said supports to removably receive a picture frame, a picture frame removably hangingly engaged with the last-mentioned means and positioned adjacent the frontmost of said displays, thereby framing said display; the picture frame receiving means comprising a plurality of pointed pins projecting upwardly from one support adjacent the outer extent thereof to hangingly receive said frame.

2. A display device as set forth in claim 1 wherein said picture frame is composed of wood and the pointed pins partially penetrate the wood to hangingly support the frame.

3. A display device comprising: a backing plate; first and second supports spaced from one another and secured to the backing plate as to extend from one surface of the backing plate; a plurality of placard-like displays slidably and supportably received between said supports in a horizontally stacked fashion; means on at least one of said supports to removably receive a picture frame, a picture frame removably hangingly engaged with the last-mentioned means and positioned adjacent the frontmost of said displays, thereby framing said display; the picture frame receiving means comprising a flange projecting upwardly from one support, and said frame has a flange thereon interengageable with said first mentioned flange to hangingly receive said frame.

4. A display device comprising: a backing plate; first and second supports spaced from one another and secured to the backing plate as to extend from one surface of the backing plate; a plurality of placard-like displays slidably and supportably received between said supports in a horizontally stacked fashion; means on at least one of said supports to removably receive a picture frame, a picture frame removably hangingly engaged with the last-mentioned means and positioned adjacent the frontmost of said displays, thereby framing said display; at least one of said supports being adjustably mounted on the backing plate for movement toward and away from the other of said supports to thereby accommodate displays of varied sizes.

5. A display device comprising: a backing plate; first and second supports spaced from one another and secured to the backing plate as to extend from one surface of the backing plate; a plurality of placard-like displays slidably and supportably received between said supports in a horizontally stacked fashion; means on at least one of said supports to removably receive a picture frame, a picture frame removably hangingly engaged with the last-mentioned means and positioned adjacent the frontmost of said displays, thereby framing said display; lighting means mounted on said backing plate and extending superjacent the picture frame to illuminate the frontmost display; one of the supports being adjustable with respect to the backing plate toward and away from the other of the supports and the lighting means is adjustably carried by the first mentioned of said supports.

**References Cited by the Examiner**

UNITED STATES PATENTS

| | | | |
|---|---|---|---|
| 241,595 | 5/1881 | Birch | 40—64 |
| 1,068,621 | 7/1913 | Abraham | 40—64 |
| 1,759,544 | 5/1930 | Croes | 40—10 X |
| 2,785,490 | 3/1957 | Fabry | 40—156 |
| 2,826,841 | 3/1958 | Hoofer | 40—10 X |
| 2,954,630 | 10/1960 | Hull | 40—152.1 |

EUGENE R. CAPOZIO, *Primary Examiner.*

JEROME SCHNALL, *Examiner.*

WENCELSO J. CONTRERAS, *Assistant Examiner.*