US00D359399S

United States Patent [19]

Rath

[11] Patent Number: Des. 359,399

[45] Date of Patent: ** Jun. 20, 1995

[54] **FLOCKED READING AND WRITING DESK**

[76] Inventor: **Michael Rath,** Bannewerthstrasse 18, D-5970 Plettenberg, Germany

[**] Term: **14 Years**

[21] Appl. No.: **7,590**

[22] Filed: **Apr. 28, 1993**

[30] **Foreign Application Priority Data**

Oct. 28, 1992 [DE] Germany ..... M 92 07 797.8

[52] **U.S. Cl.** **D6/419;** D19/88; D19/91

[58] **Field of Search** D6/406, 419, 420, 310, D6/313; D19/88, 91, 90; 211/42, 43; 248/441.1, 448, 449, 454–457, 451

[56] **References Cited**

U.S. PATENT DOCUMENTS

D. 287,914	1/1987	Woolf	D6/419
D. 308,227	5/1990	Evenson	D19/88
2,563,671	8/1951	Basinger	248/456
4,044,980	8/1977	Cumnmins	248/456
5,052,650	10/1991	Beile et al.	248/451

OTHER PUBLICATIONS

Office Appliances Jan. 1960 p. 56; "vision-aid" copy center left on page.

Primary Examiner—Carmen H. Vales-Lado
Attorney, Agent, or Firm—Antonelli, Terry, Stout & Kraus

[57] **CLAIM**

The ornamental design for a flocked reading and writing desk, as shown.

DESCRIPTION

FIG. **1** is a front, top and left side perspective view of a flocket reading and writing desk showing my new design;

FIG. **2** is a left side elevational view thereof;

FIG. **3** is a rear perspective view thereof;

FIG. **4** is a bottom plan view thereof; and,

FIG. **5** is a front, top and left side perspective view of another flocked reading and writing desk showing my new design.

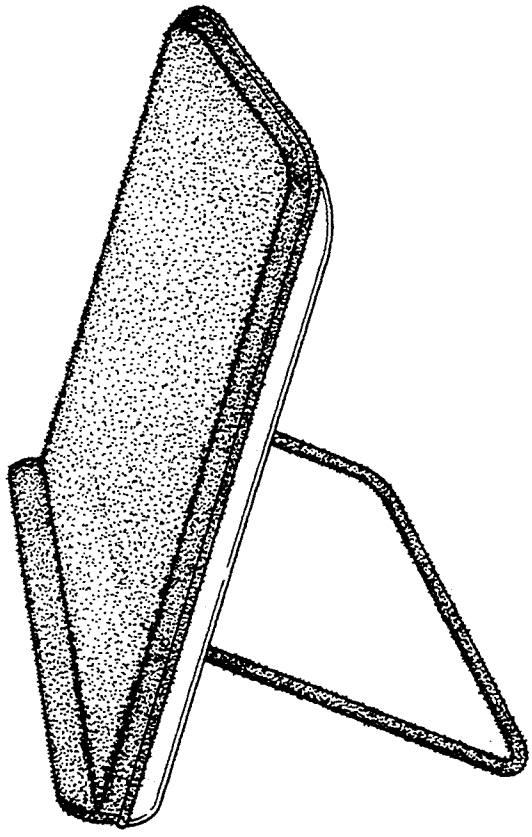

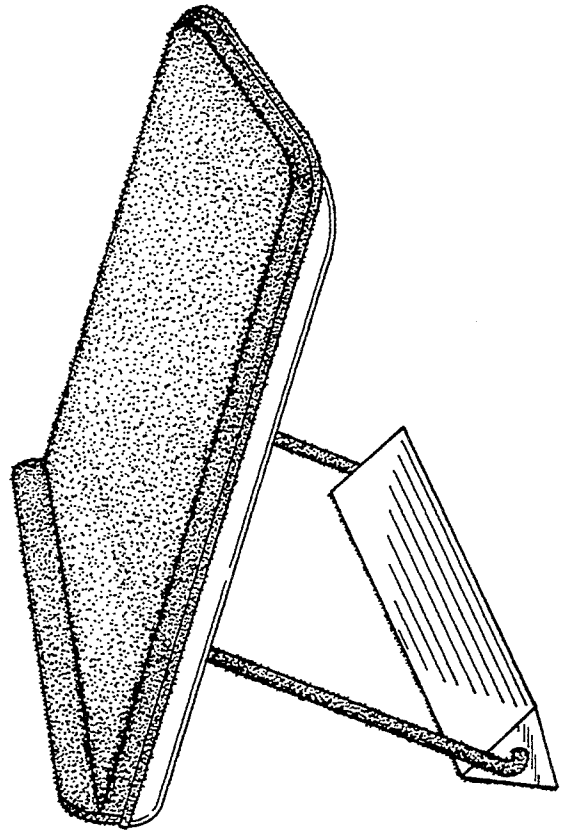

FIG. 1

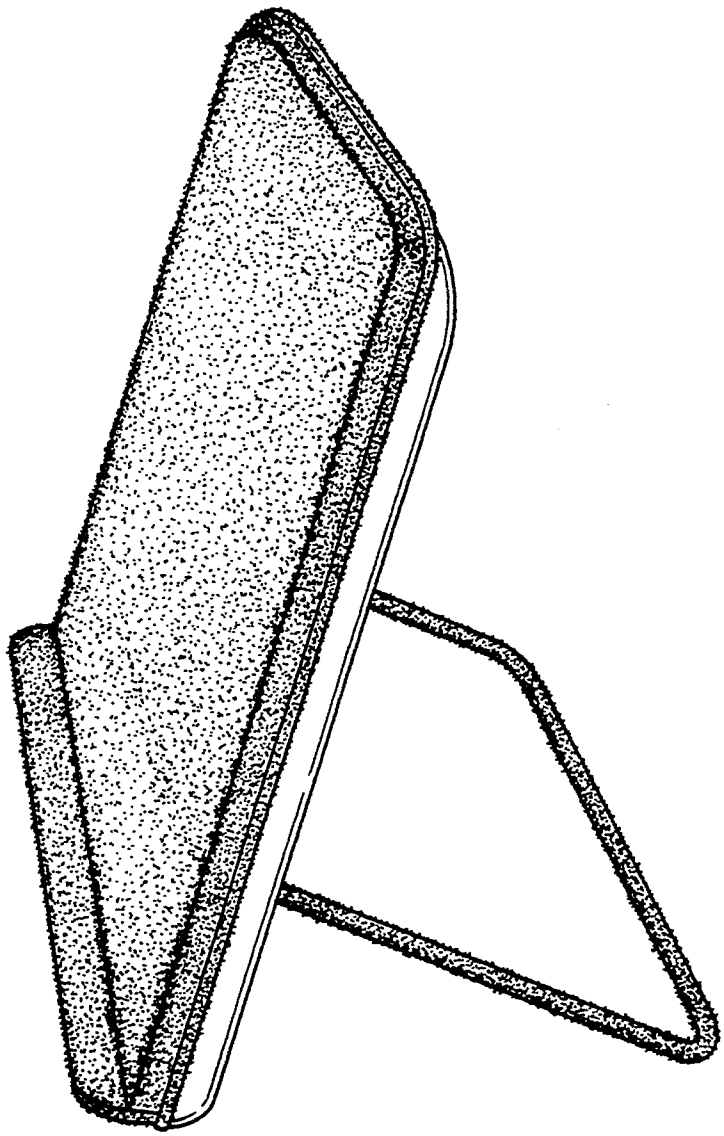

FIG. 2

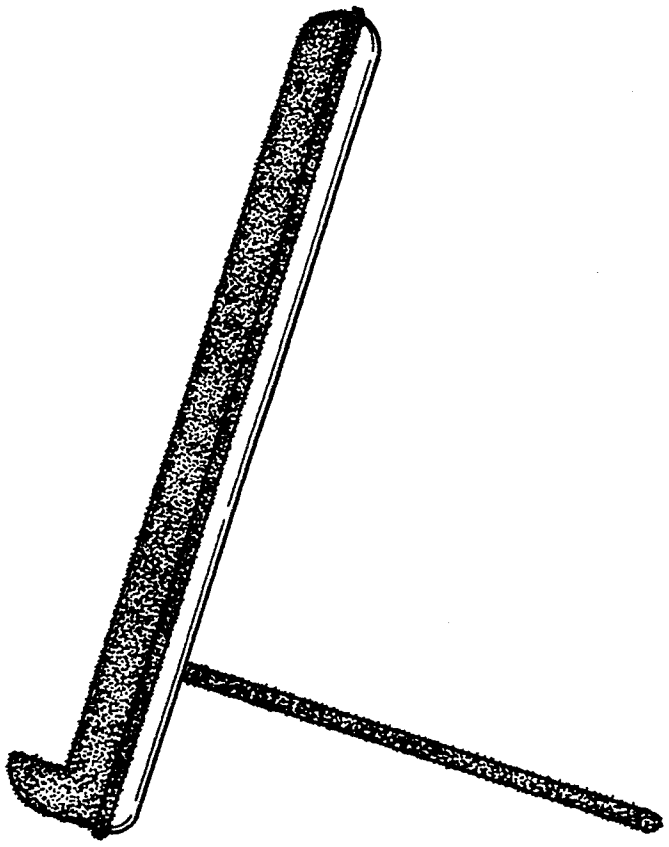

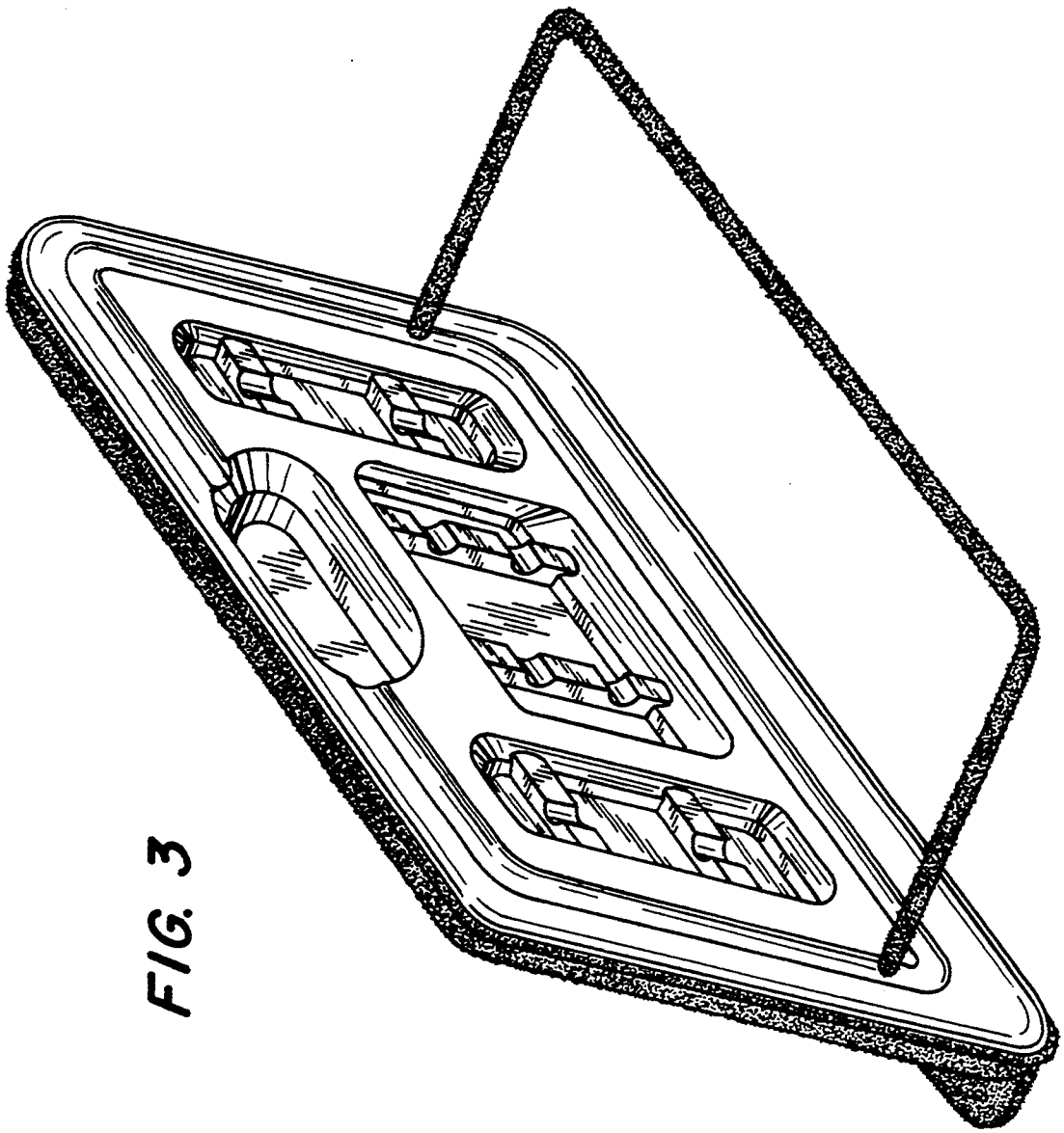

FIG. 3

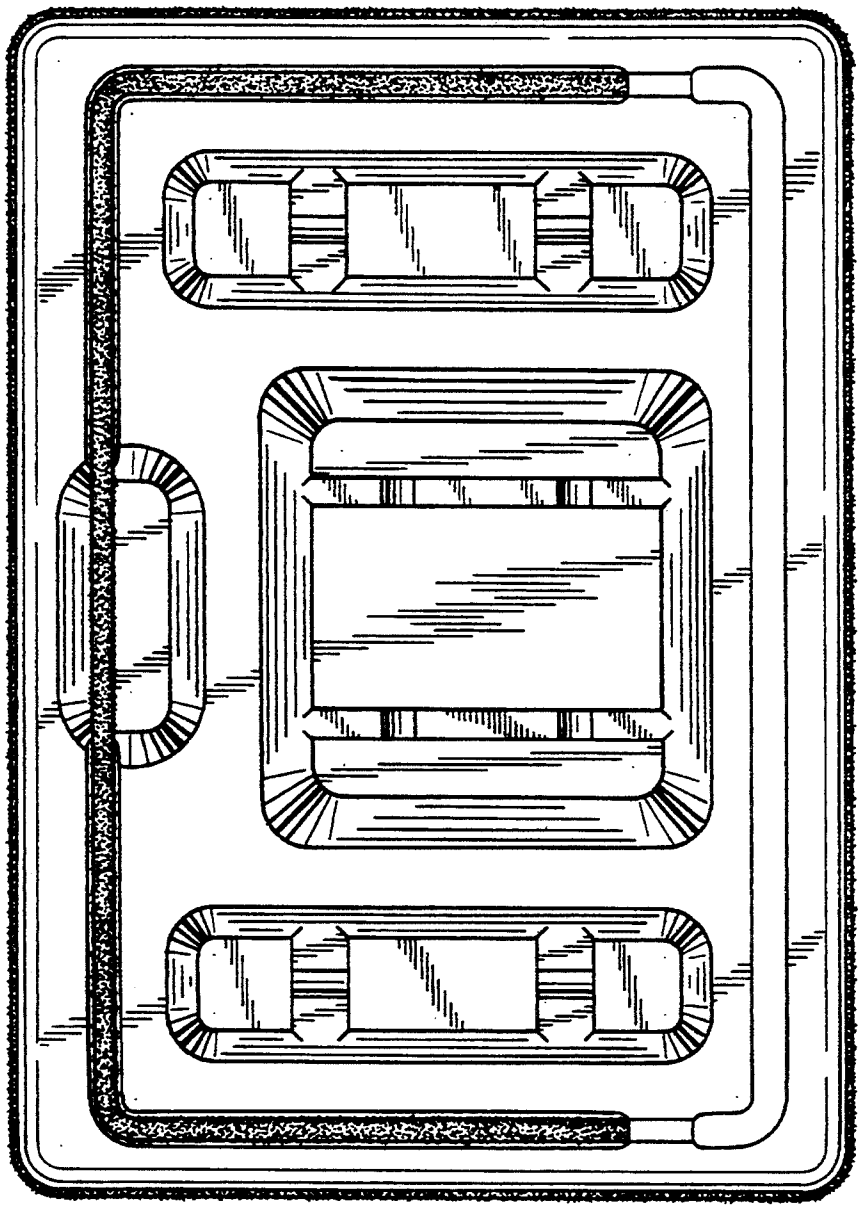

FIG. 4

FIG. 5

