W. R. KAHLENBERG.

GOVERNOR FOR FUEL INJECTION PUMPS OF ENGINES OF THE SEMI-DIESEL OR LIKE TYPES.

APPLICATION FILED JUNE 17, 1916.

1,221,542. Patented Apr. 3, 1917.

3 SHEETS—SHEET 1.

Fig. 1.

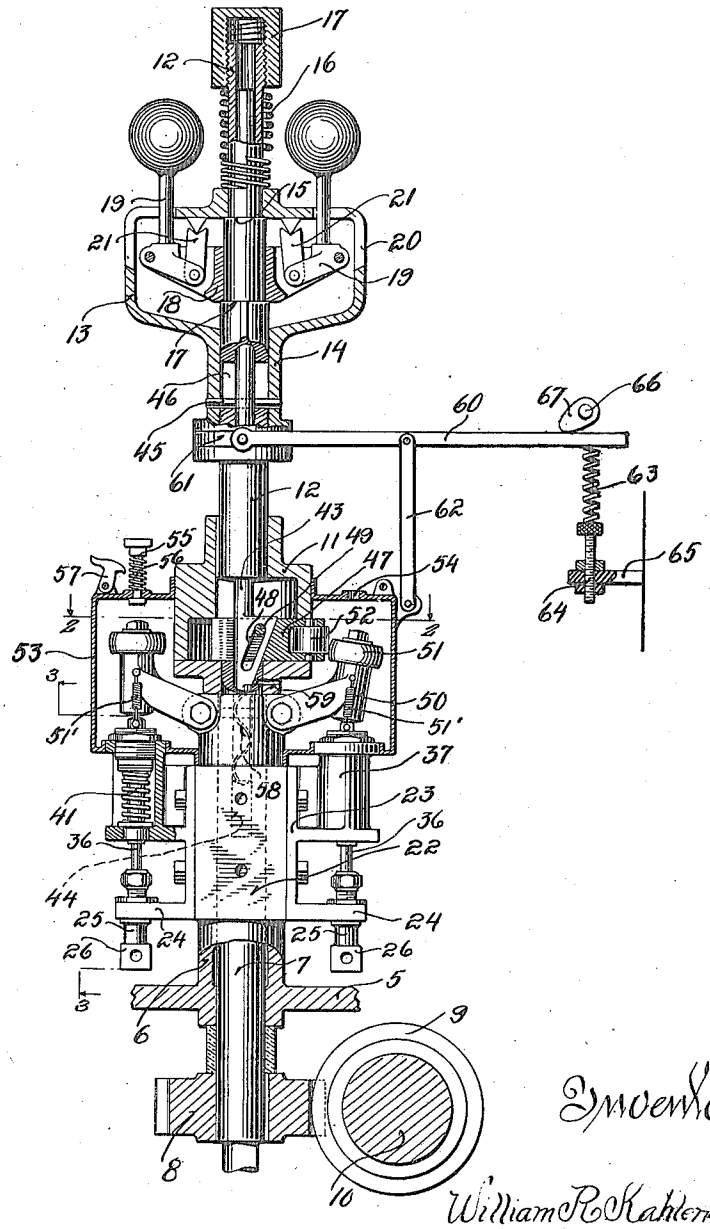

Inventor:

William R. Kahlenberg

By Geo. W. Young,

Attorney

Witness:

Witness:

W. R. KAHLENBERG.

GOVERNOR FOR FUEL INJECTION PUMPS OF ENGINES OF THE SEMI-DIESEL OR LIKE TYPES.

APPLICATION FILED JUNE 17, 1916.

1,221,542. Patented Apr. 3, 1917.

3 SHEETS—SHEET 2.

Fig. 2.

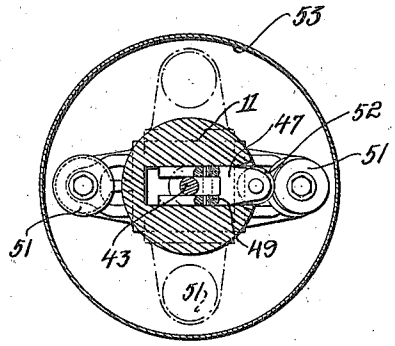

Fig. 5.

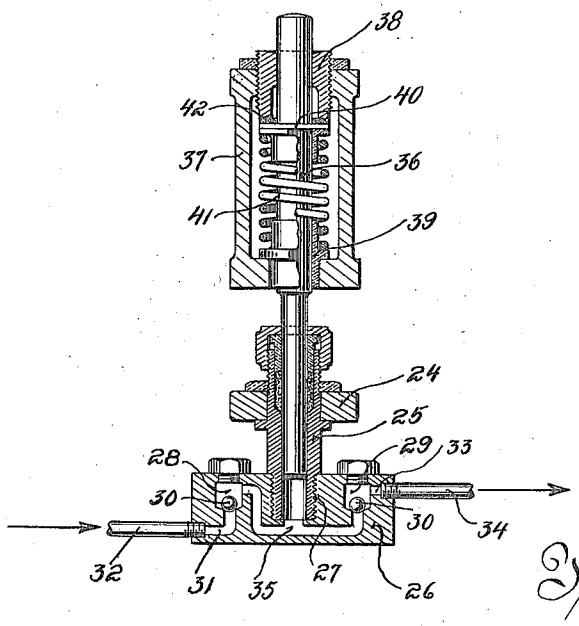

Witnesses:

Inventor

William R. Kahlenberg.

By Geo. W. Young,

Attorney.

W. R. KAHLENBERG.

GOVERNOR FOR FUEL INJECTION PUMPS OF ENGINES OF THE SEMI-DIESEL OR LIKE TYPES.

APPLICATION FILED JUNE 17, 1916.

1,221,542.

Patented Apr. 3, 1917.

3 SHEETS—SHEET 3.

Fig. 4.

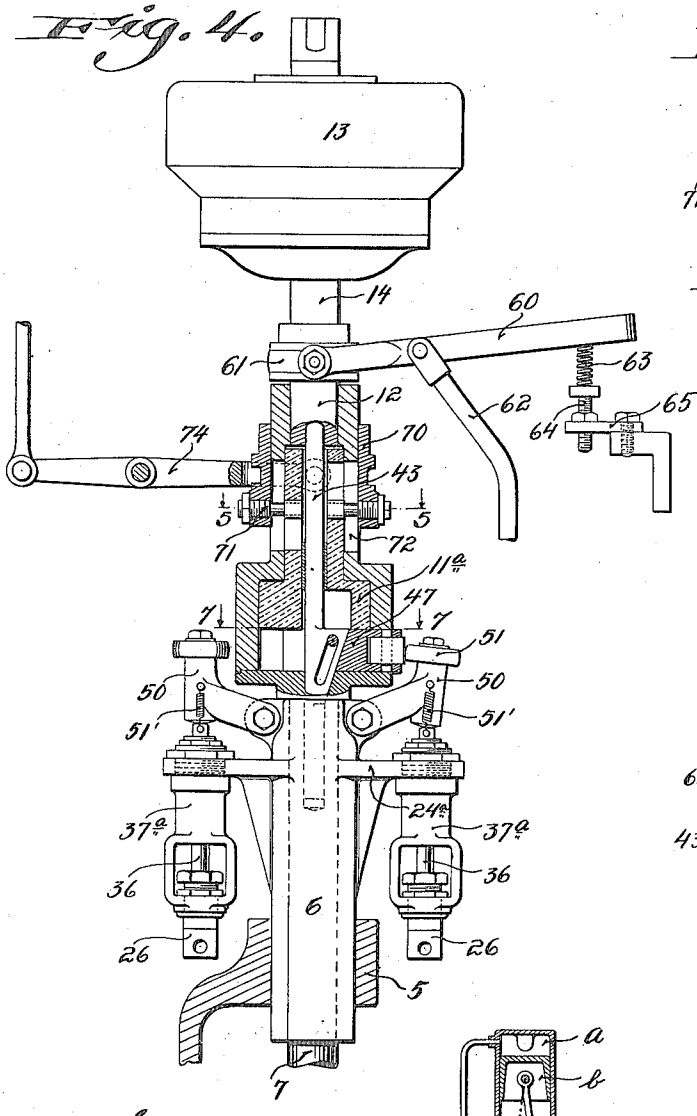

Fig. 5.

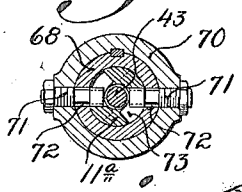

Fig. 6.

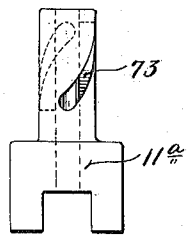

Fig. 7.

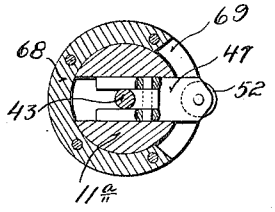

Fig. 8.

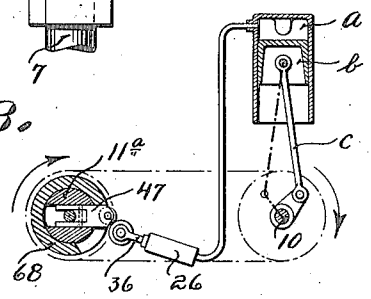

Witness:

Inventor:
William R. Kahlenberg
By
Attorney

UNITED STATES PATENT OFFICE.

WILLIAM R. KAHLENBERG, OF TWO RIVERS, WISCONSIN, ASSIGNOR TO KAHLENBERG BROS. CO., OF TWO RIVERS, WISCONSIN.

GOVERNOR FOR FUEL-INJECTION PUMPS OF ENGINES OF THE SEMI-DIESEL OR LIKE TYPES.

1,221,542. Specification of Letters Patent. Patented Apr. 3, 1917.

Application filed June 17, 1916. Serial No. 104,175.

To all whom it may concern:

Be it known that I, WILLIAM R. KAHLENBERG, a citizen of the United States, and resident of Two Rivers, in the county of Manitowoc and State of Wisconsin, have invented certain new and useful Improvements in Governors for Fuel-Injection Pumps of Engines of the Semi-Diesel or like Types; and I do hereby declare that the following is a full, clear, and exact description thereof.

The present invention relates to new and useful improvements in governor mechanisms more particularly of that type adapted for use in connection with the injection pump mechanisms of engines of the semi-Diesel or other types.

It is in general the object of the present invention to simplify the structure and improve the efficiency of governor mechanisms of this character particularly with respect to providing a direct governor control for the pump pistons of fuel injection pumps of the type described wherein a relatively violent action of the pumps is necessary to inject the fuel in a sufficiently rapid manner.

More particularly it is an important object to provide a governor actuated operating means for the pump pistons which will permit them to be operated independently, as in starting the engine, or to be locked out of operation in such instances as it would be desired not to utilize a respective cylinder or cylinders of the engine.

Another important object is to provide a means for retarding or advancing the time of actuation of the pump operating means, whereby the time of injection of fuel into the cylinders may be varied with respect to the strokes of the pistons to thus change the operation of the engine, and to provide for advancement of the pump operating means to procure a reversal of the engine operation.

A still further object is to provide an auxiliary control for the spring resistance of the governor mechanism, whereby the spring resistance may be adjusted to compensate for desired relatively small variations in the speed of the engine.

A more detailed object is to provide a connection between the governor and the pistons of the pump, which is arranged to operate in an oil bath, and which includes a shaft connected with the governor head and having a portion arranged to form a dash pot piston whereby an even operation of the governor is assured.

With the above and other objects and advantages in view, the invention resides more particularly in the novel combination, arrangement and formation of parts more particularly hereinafter described and pointed out in the appended claims.

In the drawings:

Figure 1 is a vertical sectional view taken through a governor mechanism embodying the present invention, and showing the pump structure in elevation.

Fig. 2 is a horizontal sectional view taken on the line 2—2 of Fig. 1 and showing the movable cam block.

Fig. 3 is a vertical sectional view through one of the pumps.

Fig. 4 is a view similar to Fig. 1, showing a modified form of cam block head adapted, for movement relative to the body shaft structure of the governor, to vary the time of actuation of the pumps.

Fig. 5 is a transverse sectional view on the line 5—5 of Fig. 4.

Fig. 6 is an elevational view of the modified cam block head.

Fig. 7 is a transverse section on the line 7—7 of Fig. 4.

Fig. 8 is a diagrammatic view including an engine cylinder, and showing the cam block retracted.

Referring now more particularly to the accompanying drawings, 5 designates a portion of the crank shaft casing of an engine which carries the preferably integral upstanding sleeve 6 forming a bearing for the lower shaft section 7 of the governor, which projects into the casing, and carries a gear 8 meshing with a worm gear 9 on the main crank shaft 10 of the engine. The lower shaft section 7 projects above the bearing sleeve 6 and has fixed engagement in a cam block head 11. Fixed to and projecting upwardly from this head is the upper governor shaft section 12 which is hollow and which carries a governor member comprising a head casing 13 having a depending sleeve 14

splined on the upper shaft section 12 and having its top resting on a shoulder 15 formed by reducing the upper end of the shaft section. The casing is resiliently urged to seating engagement on the shoulder by a coil spring 16 surrounding the shaft section thereabove and bearing against the casing top and against an adjusting nut 17 threaded on the upper extremity of the shaft section. Seated on a second shoulder 17 on the shaft section within the casing is a collar 18 provided with lateral ears to which are pivoted angular weighted levers 19 which when in a position of rest have weighted arms extending vertically through suitable slots 20 in the casing, and have other arms extending inwardly and carrying links 21 connected with the top of the casing. Thus upon rotation of the governor shaft structure the casing will tend to lift vertically, and although a certain particular arrangement of weighted arms has been shown, it will be appreciated that any desired arrangement of weighted arms may be utilized to procure vertical movement of a member on the governor shaft section 12 by centrifugal motion of said arms.

The bearing sleeve 6 also carries the fuel injection pumps of the engine, and for this purpose is intermediately provided with a series of flat longitudinally extending bearing faces 22 to which are selectively secured pump carrying body plates 23 each having at its lower end a lateral arm 24 through which is passed a plunger piston sleeve 25, suitably secured to the arm. Carried by the lower end of each plunger piston sleeve is a valve body block 26 which is provided centrally with a well 27 threadedly receiving the lower end of the plunger piston sleeve and which is provided at each side of the well with inlet and outlet valve chambers 28 and 29 respectively in which are disposed valve balls 30. An inlet port 31 extends through the body from the point of attachment of a suitable inlet pipe 32 and communicates with the bottom of the chamber 28 and an outlet port 33 connects the upper portion of the outlet chamber 29 with a pipe 34 which extends to the respective engine cylinder. Connecting the valve chambers is a passage 35 which is at its intermediate portion in communication with the well 27. Thus upon reciprocation of a plunger piston in its respective sleeve 25, fuel will be alternately drawn through the pipe 32, and forced through the pipe 34. The plunger piston comprises the lower end of a vertical shaft 36 which is journaled at its upper portion in the ends of a casing 37 carried by the upper portion of the body plate, this casing being longitudinally slotted at its outer side and being provided in its end portions with suitable upper and lower bearing sleeves 38 and 39 respectively. The upper portion of the shaft within the casing 37 is provided with an annular flange 40 which is normally urged to bear against the sleeve 38 by an expansile spring 41, a suitable sound deadening gasket 42 being interposed between the flange and sleeve 38. Thus successive depressing movements of the shaft will actuate its respective pump.

To provide an operating means for the pump shaft 36, which is variable to correspond to variations in the vertical position of the governor head casing 13, a cam shaft 43 is passed longitudinally through the upper governor shaft section 12 and through the cam block head 11, and has its lower end slidable in a socket 44 formed longitudinally in the upper portion of the lower governor shaft section 7. This shaft 43 is connected with the governor head casing 13 for vertical movement thereby, by a pin 45 passed transversely through the shaft and sleeve 14 of the casing and slidable in a slot 46 formed in the adjacent portion of the governor shaft section 12. Slidable transversely in the cam block head 11 is a cam block 47 one end of which is adapted to extend outwardly of the head and the other end of which is bifurcated to embrace the cam shaft 43. Adjacent the block the cam shaft is provided with a lateral enlargement in which is formed a diagonally extending slot 48 and through this slot and the furcations of the cam block 47, is passed a pin 49. Thus vertical reciprocative movements of the cam shaft 43, due to corresponding movement of the governor head casing which is caused by variations in the speed of the engine, will cause the block 47 to reciprocate horizontally. To provide for operation of the pump shafts by this block 47, rock-bars 50 are pivoted to the upper end of the bearing sleeve 6 above the pump shafts and with their upper ends disposed in the path of the cam block and provided with rollers 51 adapted to be engaged by a roller 52 carried by the end of the cam block.

Thus as the governor shaft structure revolves, the cam block will successively engage the rock-bars 50 to depress their respective pump shafts, and thus inject fuel into respective engine cylinders, and variations in the speed of the engine will vary the distance which the cam block projects from the axis of rotation of the governor shaft, and consequently will vary the stroke of the pump shafts whereby a greater or lesser amount of fuel will be supplied to the cylinders and the speed of the engine will be thus effectively controlled. Inasmuch as the fuel is injected into the cylinders at substantially the inner limit of movement of the respective pistons, the period of injection must be as short as possible, necessitating relatively rapid and violent actuations of the pumps. This is accomplished

in the present structure by the rapid rotation of the cam block and the relatively great inclination of its operative cam surface. It is further noted that the shock of engagement of the cam block and rock bars is not transmitted to the governor arms, particularly by reason of the inclination of the cam slot 48 of the shaft 43.

It is observed that should it be desired to operate the pumps manually, as in starting the engine, the rock-bars may be operated independently of the governor. Also, should it be desired to shut off the operation of one of the cylinders, the respective rock-bars may be held out of the path of the cam block, to thus prevent operation of the respective pump. A means for selectively operating and holding the rock-bars will be later described.

To provide an oil bath for the cam block and the adjacent structure, a casing 53 surrounds the said structure and has a flanged opening in its top through which rotatably extends the upper portion of the cam block head 11, and has flanged openings in its bottom receiving respective pump shaft guide cylinders 37, and the main bearing sleeve 6 of the governor. The top of the casing is provided above the rock-bars 50 with openings 54 through which are slidably passed plunger rods 55 normally urged to their upward limit of movement by expansile springs 56 disposed about the rods between the oil casing 53 and their upper ends. These rods are adapted upon depression to engage and rock the rock-bars 50 to thus procure manual operation of the respective pump. Should it be desired to lock one of the pumps against operation, the respective plunger rod 55 is held depressed, and for this purpose a suitable catch member 57 is pivoted to the top of the oil casing adjacent each plunger rod and is adapted to engage over the top thereof.

To hold the rock bars at all times in operative relation to their respective pump shafts, the bars and shafts are connected by retractile springs 51'.

Governor mechanisms of the present nature are usually provided with a dash pot for controlling the movement of the control casing, and to economically provide a dash pot in the present structure, the bottom of the socket 44 in the lower governor shaft section 7 is utilized, and the lower end of the cam shaft is provided in its periphery with a spiral groove 58 communicating with the bottom of the socket and with a lateral oil passage 59 extending through the lower portion of the cam block head 11.

The main adjusting nut 17 of the governor provides for a major degree of adjustment of the spring tension of the governor and thus for general adjustment of the engine speed. To provide, however, for an auxiliary adjustment of the spring tension of the governor to compensate for relatively small variations in the engine speed, particularly while the engine is running, a lever 60 has one end bifurcated and pivoted to a link 61 carried at the lower end of the sleeve 14 of the head casing and is intermediately pivoted to a link 63 extending upwardly from and pivotally connected with the oil casing 53 or other desired support. Bearing against the other end of the lever 60 is one end of an expansile spring 63 which has its other end secured to an adjusting bolt 64 passed through a lug 65 disposed below the lever and carried by a suitable support which may be a portion of the adjacent engine cylinder. Thus an adjustment of the bolt 64 to increase the tension of the spring 63 will serve to increase the ultimate spring tension exerted on the governor head casing and consequently accelerate the speed of the engine. Consequently an adjustment of the bolt 64 to decrease the ultimate spring tension exerted on the governor head casing will reduce the speed of the engine.

This auxiliary adjusting lever may also be utilized as a throttle device for the engine, and to accomplish this a shaft 66 is disposed transversely across that end of the lever farthest from the governor and carries a cam 67 adapted upon rotation of the shaft to depress the lever and raise the casing to consequently draw the pump operating cam block 47 inwardly and reduce the stroke of the pumps. Movement of this shaft 67 to an extereme inward position may thus operate to entirely stop the engine inasmuch as the cam block 47 is capable of movement inwardly to a position wherein its roller will not engage the rock-bars block 50.

Movement of the governor head casing 13 may also serve particularly through the medium of the spring rod 60, to regulate other portions of the engine mechanism, as for instance suitable damper means controlling the admission of air to the engine.

Although only two pumps are shown associated with the present governor structure, it will be seen that any number of pumps may be disposed about the main bearing sleeve 6 for operation by the cam block 47 of the governor, and in the present instance additional attaching faces are shown on the sleeve 6 for the attachment of additional pumps should the governor structure be associated with engines having more than two cylinders.

While the foregoing description embodies a preferred form of my invention, it will be appreciated that various modifications of structure may be resorted to within the scope of the accompanying claims, it being appreciated, that the essential feature of the invention is the provision of a cam member carried by the governor shaft structure

and movable to vary its cam operation upon certain engine control members, which in the present instance are the pump shafts 36.

The modified structure shown in Figs. 4 to 8 provides a means whereby the cam block may be advanced or retracted with respect to its normal engine controlled time of engagement with the pumps, and to accomplish this, the cam block 47 is transversely slidable in a cam block head 11ª which includes an upwardly extending sleeve portion surrounding the adjacent section of the cam shaft 43, the cam block head being rotatably mounted in a casing 68 which is fixedly connected with the upper and lower governor shaft sections 12 and 7 respectively, the casing being provided adjacent the cam block with a transverse slot 69 in which the block is slidable. The oil casing of the pump engaging structure is eliminated in the present instance, and the pump heads 26 are carried by casings 37ª which depend from arms 24ª extending integrally from the main bearing sleeve 6. It will be understood, however, that the oil casing and the method of attachment of the pumps embodied in Figs. 1 to 3 can, as well, be associated with the present rotatable type of cam block head. Rotative movement of the head is procured by a sleeve 70 which is splined on the upper portion of the head casing 69 and which carries pins 71 extending through vertical slots 72 in the casing 68 and with their ends engaged in spiral slots 73 formed in the cam block head 11ª whereby vertical movement of the sleeve procures rotative movement of the head and consequently of the cam block to vary the time of engagement of the cam block with the rock bars 50 of the pumps. This vertical movement of the sleeve is procured by means of a pivotal lever 74 having one end bifurcated to embrace the sleeve and rotatably connected therewith.

The cam block may be thus advanced or retracted with respect to its normal time of operation, to thus procure a consequent variation of the time of explosion.

In the diagrammatic structure of Fig. 8, *a* designates an engine cylinder in which is disposed the piston *b* connected with the crank shaft 10 by the usual crank arm *c*. In this figure the cam block 47 is retarded in its movement to operate the pump shaft 36, and thus the fuel is injected into the cylinder after the cycle of the engine has passed what may be termed its normal time of explosion. Advancement of the cam block will procure an injection of fuel into the cylinder before the crank arm has reached its position of dead center to thus procure a reversal of the engine.

I claim:

1. A governor comprising a main shaft structure, a cam block carried thereby and laterally movable, a shaft longitudinally carried by the main shaft structure and including a cam portion connected with the block, centrifugal governor arms carried by the main shaft structure and connected with the cam shaft and engine control means engageable by the cam block.

2. A governor comprising shaft sections connected by a cam block head, a cam block transversely slidable in the head, a cam shaft passed through one of the sections and extending into the head, a governor head splined on said section, a cam connection between the cam shaft and cam block and a connection between the governor head and cam shaft.

3. A governor comprising main shaft sections connected by a cam block head, a cam block transversely slidable in the head, a cam block actuating shaft passed through one of the main shaft sections and extending through the cam block head, a governor head splined on said main shaft section, the other section being provided with a socket receiving the cam block actuating shaft and forming a dash pot in conjunction therewith, an operative connection between the cam block actuating shaft and cam block, and a connection between the governor head and cam block actuating shaft.

4. A governor comprising a rotatable body, centrifugal governor arms carried thereby, pumps disposed at the sides of the rotatable member, pivoted rock-bars adapted to operatively engage the pumps, a movable cam member carried by the rotatable body to engage the rock-bars and connected with the governor arms, an oil casing surrounding the cam members and rock-bars, and plungers slidable through the casing to operatively engage the rock-bars.

5. A governor comprising a rotatable body, centrifugal governor arms carried thereby, pumps disposed at the sides of the rotatable member, pivoted rock-bars adapted to operatively engage the pumps, a movable cam member carried by the rotatable body to engage the rock-bars and connected with the governor arms, an oil casing surrounding the cam members and rock-bars, plungers slidable through the casing to operatively engage the rock-bars and means for holding said plungers in engagement with the rock-bars.

6. A governor comprising a rotatable body, a head splined on the body, centrifugal arms connected with the head for moving it, an adjustable spring engaging the head for holding it against such movement, a pivoted lever rotatably connected with the head, an adjustable auxiliary spring connected with the lever and a control member associated with the head for operation thereby.

7. A governor comprising a rotatable body, a head splined on the body, centrifugal arms connected with the head for moving it, an

adjustable spring engaging the head for holding it against such movement, a lever rotatably connected with the head for moving it against the action of the centrifugal arms and a control member associated with the head for operation thereby.

8. A governor comprising a rotatable body, a head splined on the body, centrifugal arms connected with the head for moving it, an adjustable spring engaging the head for holding it against such movement, a pivoted lever rotatably connected with the head, a shaft disposed transversely of the lever, a cam on the shaft engageable with the lever and a control member associated with the head for operation thereby.

9. A governor comprising a rotatable body, centrifugal governor arms carried thereby, a fuel injection pump, a cam member carried by the rotatable body for operative engagement with the pump, means connecting the cam member and governor arms to control the degree of operative engagement of the cam member with the pump, and means for controlling the time of engagement of the cam member with the pump.

10. A governor comprising a rotatable body, centrifugal governor arms carried thereby, a cam head rotatably carried on the body, a fuel injection pump, a cam block slidable transversely in the head and engageable with the pump to operate it, means connecting the governor arms and the cam block to control transverse sliding movement thereof in the head, and means controlling relative rotative movement of the body and cam head.

11. A governor comprising a rotatable body, centrifugal governor arms carried thereby, a cam head rotatably carried by the body and provided with a spiral groove, a sleeve splined on the rotatable member, a control lever connected with the sleeve, a pin carried by the sleeve and engaged in said groove, a fuel injection pump, a cam block slidable transversely in the head and engageable with the pump to operate it, and said cam block being connected with the governor arms to control its transverse sliding movement.

In testimony that I claim the foregoing I have hereunto set my hand at Two Rivers, in the county of Manitowoc and State of Wisconsin, in the presence of two witnesses.

WM. R. KAHLENBERG.

Witnesses:
H. C. WILKE,
E. J. SOIK.