Oct. 17, 1967 B. L. SHERROD 3,347,054

UNDERWATER PIPE TRENCHING DEVICE

Filed April 15, 1966 5 Sheets-Sheet 1

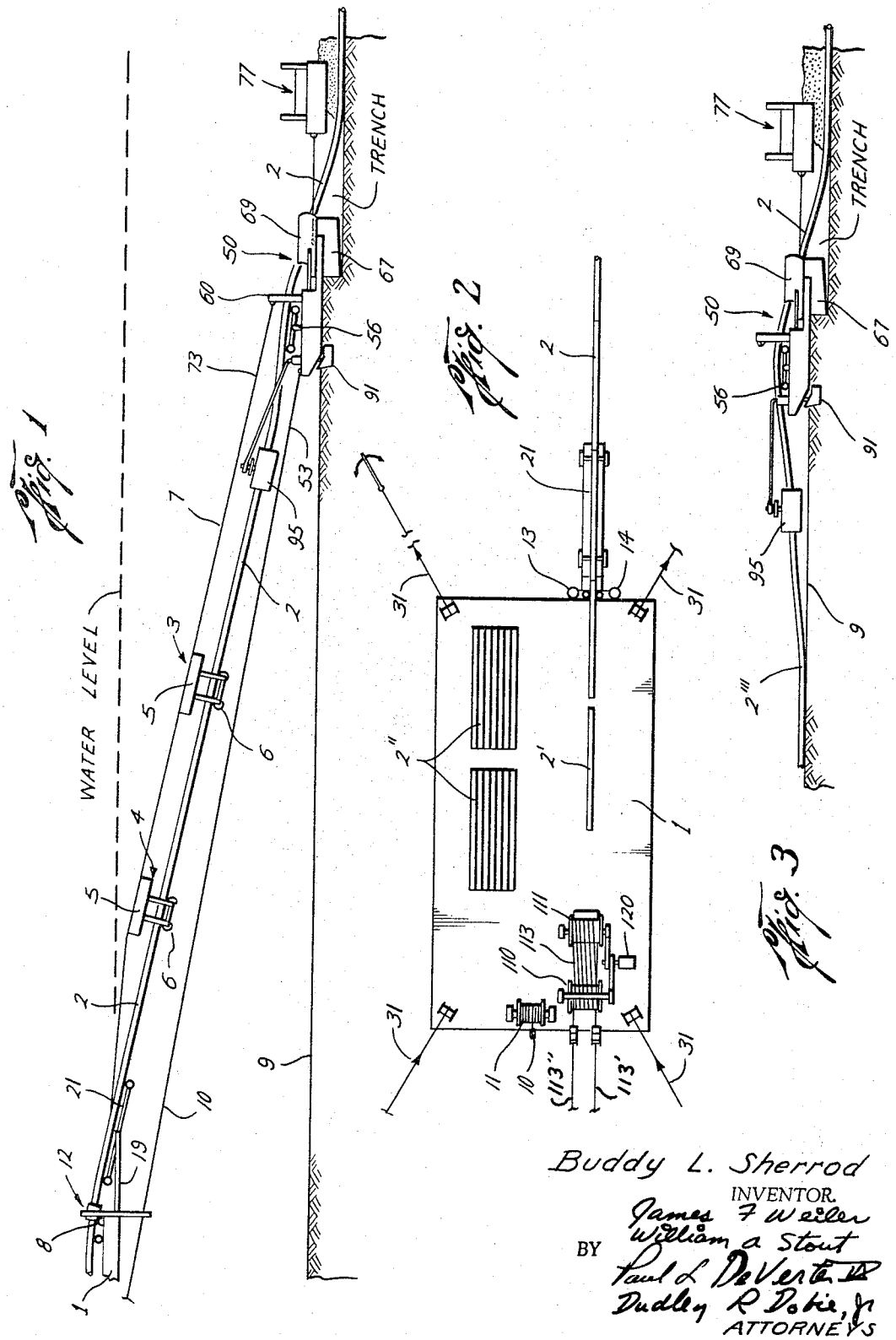

Fig. 1

Fig. 2

Fig. 3

Buddy L. Sherrod
INVENTOR.

BY James F Weiler
William a Stout
Paul L DeVerter
Dudley R Dobie, Jr
ATTORNEYS

Oct. 17, 1967 B. L. SHERROD 3,347,054

UNDERWATER PIPE TRENCHING DEVICE

Filed April 15, 1966 5 Sheets-Sheet 2

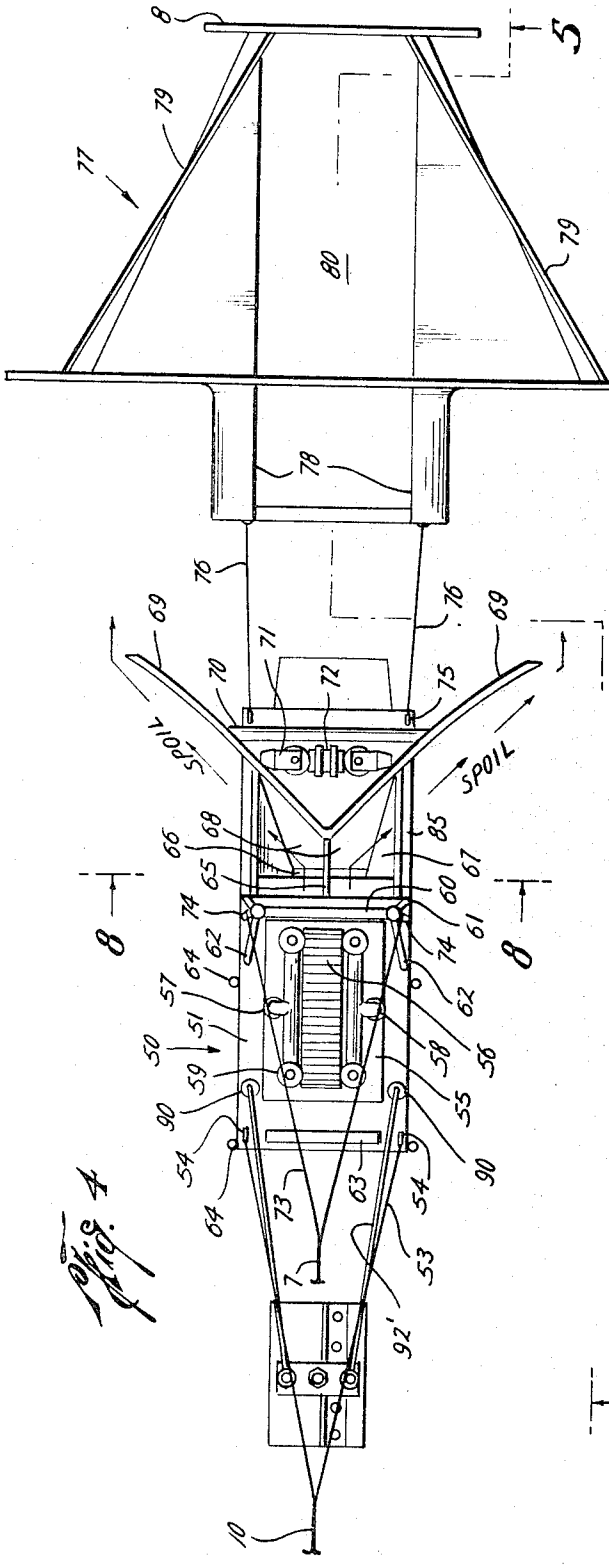

Fig. 4

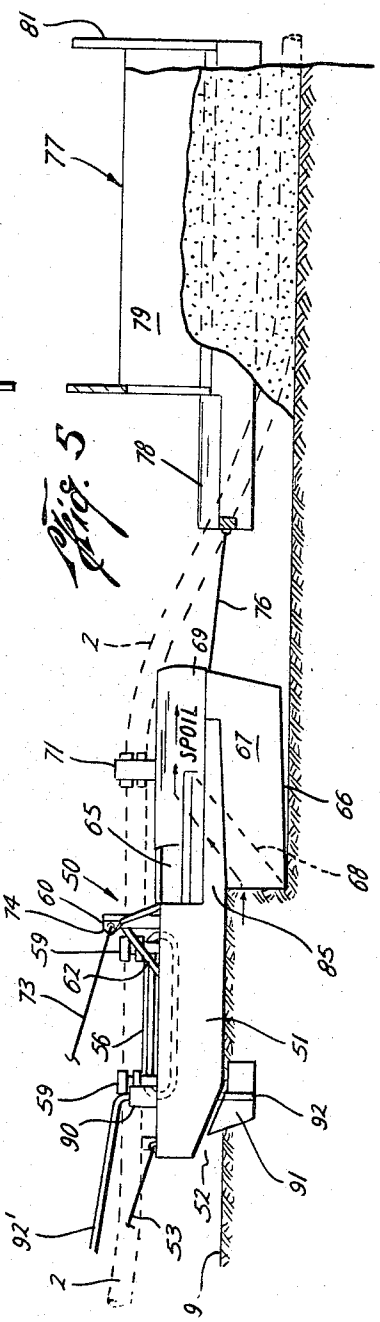

Fig. 5

Buddy L. Sherrod
INVENTOR.

BY James F Weiler
William A Stout
Paul L DeVeter Jr
Dudley R Dobie, Jr
ATTORNEYS

Oct. 17, 1967 B. L. SHERROD 3,347,054

UNDERWATER PIPE TRENCHING DEVICE

Filed April 15, 1966 5 Sheets-Sheet 3

Fig. 6

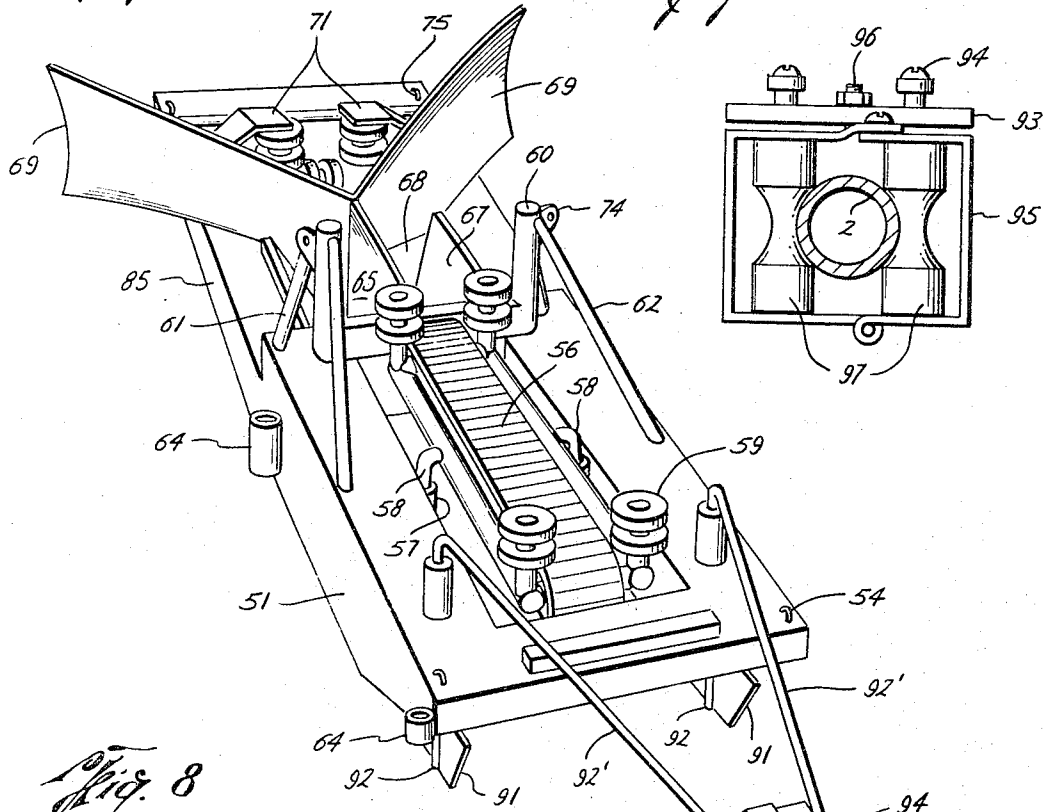

Fig. 7

Fig. 8

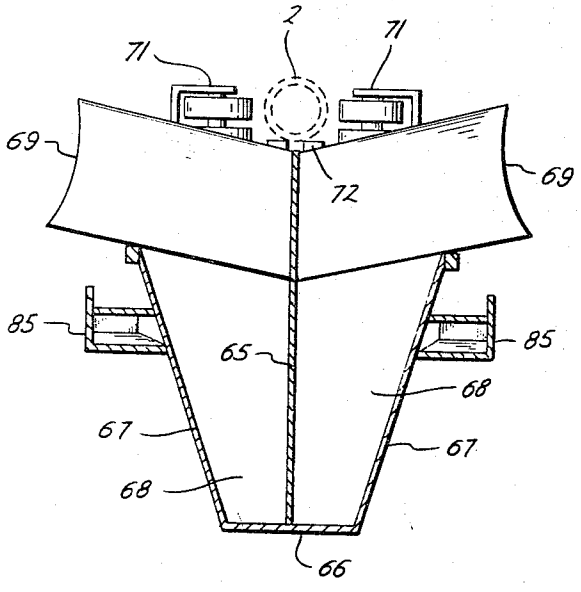

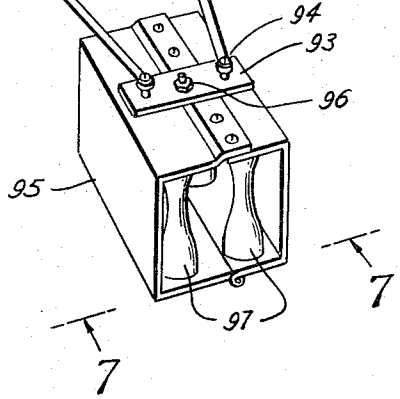

Buddy L. Sherrod
INVENTOR.

BY James F. Weiler
William A Stout
Paul L DeVerter Jr
Dudley R Dobie, Jr
ATTORNEYS

Oct. 17, 1967 B. L. SHERROD 3,347,054

UNDERWATER PIPE TRENCHING DEVICE

Filed April 15, 1966 5 Sheets-Sheet 4

Fig. 9

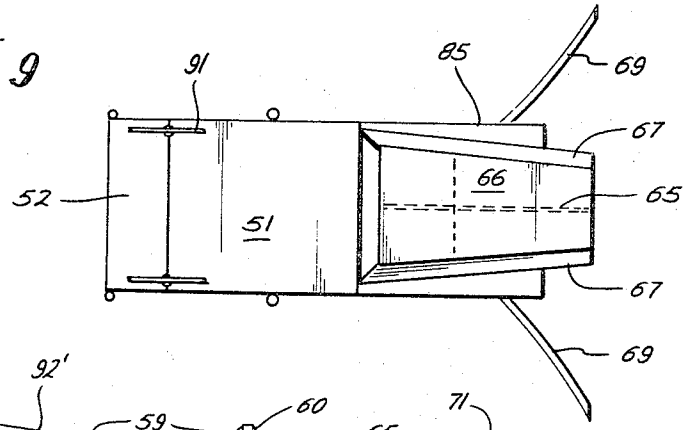

Fig. 10

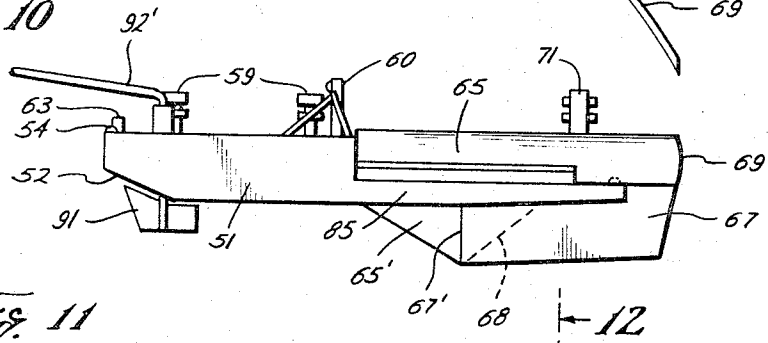

Fig. 11

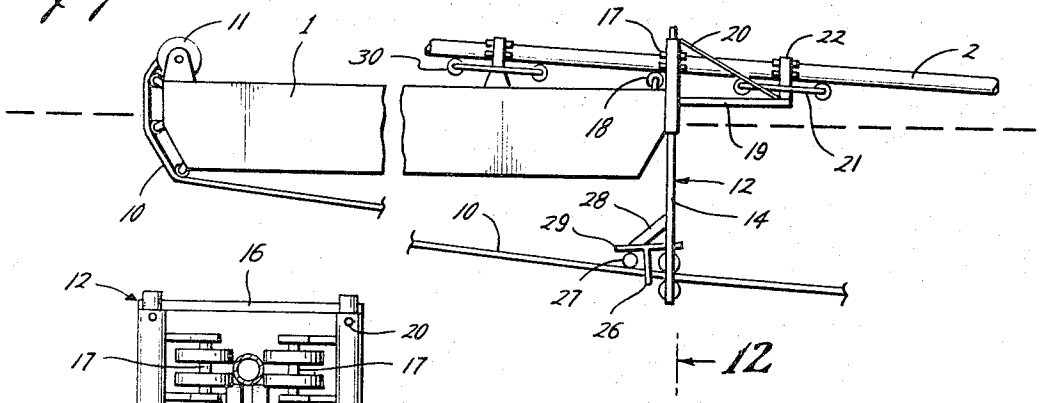

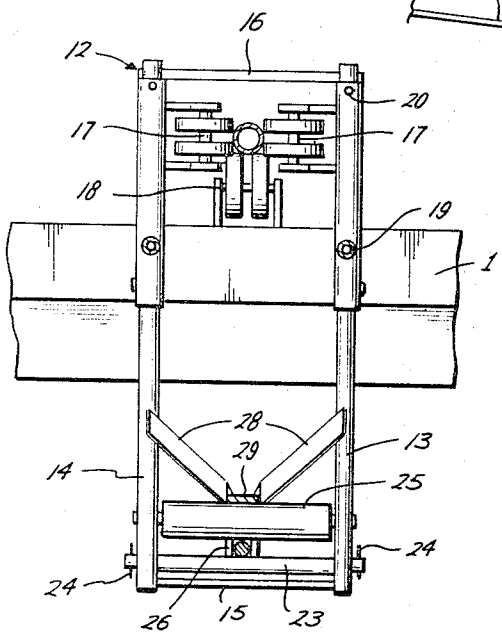

Fig. 12

Buddy L. Sherrod
INVENTOR.
BY James F Weiler
William A Stout
Paul L DeVerter
Dudley R Phillips, Jr.
ATTORNEYS

Oct. 17, 1967 B. L. SHERROD 3,347,054

UNDERWATER PIPE TRENCHING DEVICE

Filed April 15, 1966 5 Sheets-Sheet 5

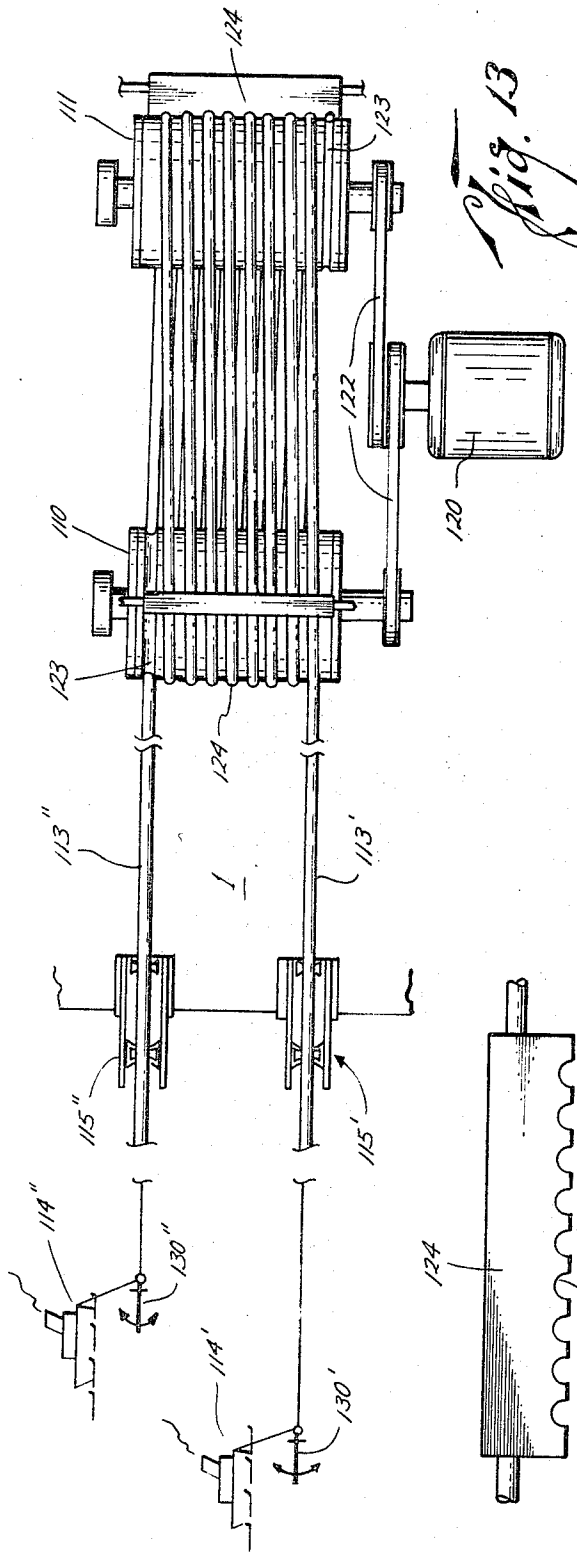

Fig. 13

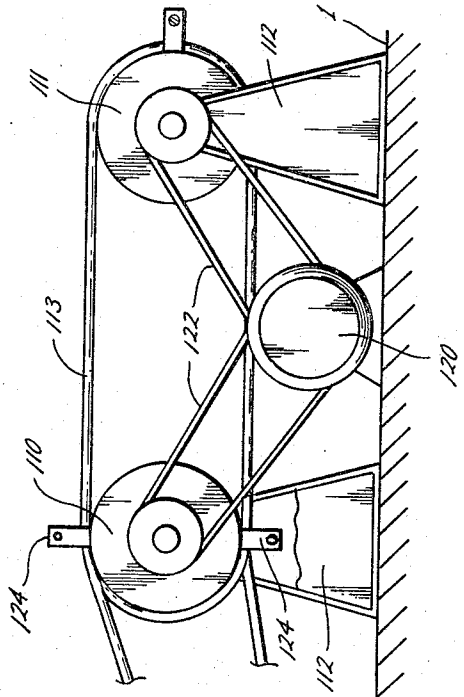

Fig. 14

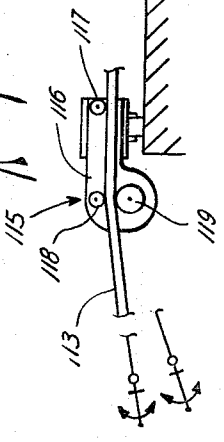

Fig. 15

Buddy L. Sherrod
INVENTOR.

BY James F. Wells
William A. Stout
Paul L. DeVerter Jr.
Dudley R. Dobie Jr.
ATTORNEYS

United States Patent Office

3,347,054

Patented Oct. 17, 1967

3,347,054

UNDERWATER PIPE TRENCHING DEVICE

Buddy L. Sherrod, P.O. Box 1075,
Conroe, Tex. 77301

Filed Apr. 15, 1966, Ser. No. 542,832
8 Claims. (Cl. 61—72.4)

ABSTRACT OF THE DISCLOSURE

The present invention relates to underwater pipe trenching apparatus, and more particularly to a method and means for digging a trench under water along a desired path and simultaneously laying pipe therein. A newly constructed sled or plow is used to provide greater ease of trenching as well as a novel guide means for more accurate control of the plow. In addition, an improved method of towing the plow is disclosed which allows continuous, rather than intermittent, movement.

This application is a continuation-in-part of my prior application Ser. No. 83,290, filed Jan. 17, 1961.

It is quite often necessary to lay pipe on the beds of bodies of water, and the problems that are encountered in doing this are well known. The most vexing of these problems are the possibility of fouling or snagging on anchors of passing boats and the possibility of damage due to the action of the water itself on the unprotected pipe. Accordingly, it is often desirable to bury the pipe in the bed or floor of the body of water. Various means have been devised to accomplish this, among which are such things as bucket and suction dredges and high-pressure jet systems. Underwater plows have also been used to a limited extent, but, prior to the present invention, have proven quite inadequate except in very shallow water. These methods all suffer from various defects of one sort or another, the most common of which are: lack of speed in performing the operation, high cost, both in production and operation, inadequate means to keep the pipe aligned properly, and unreliable performance in trenching. Another disadvantage is that of tow cable breakage due to the resistive forces created while digging the trench.

Before the discovery of the present system and arrangement, the method of pulling whatever type of trenching apparatus that was being used, was a slow and tedious intermittent process, requiring frequent stops and lengthy periods of time to set up each pull. Little control was maintained over the trenching mechanism except for that inherent in pulling it forward. Furthermore, various factors will cause the direction of feed of the pipe to vary and, since the pipe must necessarily be connected to the trenching mechanism itself to be certain that it is fed into the trench being dug, any such change in direction of feed often disrupts the digging of the trench.

The present invention overcomes these disadvantages of the prior art devices by the utilization of a uniquely designed plow which is capable of cutting a trench of varying sizes in water of substantial depth. The plow utilizes two adjacent, essentially U-shaped digging members having means to move the dirt, silt, etc., dug from the trench (hereinafter referred to as spoil) up and away from the trench until the pipe is laid. This novel design also provides a means by which the pressure exerted by the soil when the trench is dug is greatly decreased. It further incorporates improved means for laying the pipe into the trench as it is dug.

The present invention is further characterized by the utilization of novel guiding means to insure the proper alignment of the pipe with the trench. Guide means, through which the pipe is fed, are attached to the front of the plow. One or more rudders are movably fastened to the bottom of the plow and are operatively connected to the guide means. Due to water currents, movement of the barge used to lay the pipe (hereinafter referred to as the lay barge) or other such factors, the pipe string may move as it descends to the floor of the body of water thereby changing the direction from which the pipe is fed. This change of direction is transmitted from the guide means to the rudders, thus changing the path along which the trench is being dug.

The present invention further employs a novel method of pulling the underwater trenching apparatus which drastically reduces the time consumed in performing the trenching operation. Two pulling vessels (hereinafter called tugs) are utilized, each being attached to a separate end of a single pulling cable. The portion of the cable intermediate of its ends is passed about a rotating sleeve-drum on the lay barge a sufficient number of times to provide a frictional contact sufficient to move the barge by rotation of the sleeve-drum. As the sleeve-drum is rotated, one end of the cable is taken up and one end let out. The tug attached to the end being taken up is held stationary (such as by the use of anchors) and the lay barge is pulled to it. Simultaneously, the second tug moves forward as its cable is played out. When the barge reaches the first tug, the sleeve-drum is turned in the opposite direction, and the operation is repeated with the second, and now distant) tug being held stationary. This method of pulling the lay barge and its connected trenching apparatus is an almost continuous one and results in a tremendous decrease in time of operation.

It is, therefore, an object of the present invention to provide an economical, efficient and reliable method and apparatus for underwater trenching and pipe laying.

It is a further object of the present invention to provide novel trenching apparatus which will function reliably and efficiently in substantial depths of water. A still further object is to provide a novel trenching apparatus capable of digging a trench which can be of varying dimensions up to several feet in depth and width. A still further object of the present invention is to provide a unique plow which is designed so as to relieve a substantial portion of the pressure and friction exerted by the soil as the plow is pulled to cut the trench, thus relieving much of the stress on the towing cable and associated apparatus.

An additional object of the present invention is to provide a dependable method and apparatus to properly place the pipe in the trench. A further object is to provide guide means to change the direction of movement of the plow as the direction from which the pipe is fed changes, and to be responsive to any sudden and unexpected shifts in the direction of pipe feed.

An additional object is to provide a means and method for pulling the trenching apparatus which is simple to perform, economical to operate, and which provides a substantial increase in speed of operation. A further object is to provide a method and apparatus of pulling the trenching equipment which is substantially a continuous operation and requires relatively little set-up time.

Another object of the present invention is to provide pipe trenching apparatus which may be used to bury pipe as the pipe is being laid or which may be used to bury pipe that has been previously strung across the bottom of the body of water.

These and other objects, advantages, and features of novelty of the invention will become apparent upon reading the following specification with reference to the accompanying drawings in which the same reference characters refer to the same parts throughout the several views, and in which:

FIGURE 1 is an elevational view of the present invention showing the pipeline being laid in the trench as the trench is dug, the lay barge being partially shown,

FIGURE 2 is a plan view of the lay barge,

FIGURE 3 is an elevational view of the trenching mechanism of the present invention being utilized with a pipe that has previously been strung across the ocean floor,

FIGURE 4 is a plan view of the trenching mechanism of the present invention and a back filler which may be used,

FIGURE 5 is a side view of the apparatus of FIGURE 4 partially in section taken along line 5—5 of FIGURE 4, the pipe being laid being shown in broken lines,

FIGURE 6 is a perspective view of the trenching mechanism with its guide means,

FIGURE 7 is an end view of the housing or collar of the guide means taken along line 7—7 of FIGURE 6,

FIGURE 8 is a sectional view of the trenching mechanism taken along line 8—8 of FIGURE 4,

FIGURE 9 is a bottom view of the trenching mechanism taken along line 8—8 of FIGURE 4,

FIGURE 9 is a bottom view of the trenching mechanism,

FIGURE 10 is an elevational view of a modified embodiment of the trenching mechanism,

FIGURE 11 is an elevational view of the lay barge showing the means of feeding the pipe and towing cable,

FIGURE 12 is a sectional view of the pipe and cable guiding means taken along line 12—12 of FIGURE 11,

FIGURE 13 is a plan view of the apparatus used to pull the lay barge and trenching equipment,

FIGURE 14 is an elevational view of the apparatus shown in FIGURE 13, and

FIGURE 15 is an elevational view of the hold-down or locking bar employed in the apparatus of FIGURE 13.

Turning now to the drawings, in FIGURE 1 there is shown the present invention as it is used to lay pipe beneath the surface of the bottom of a body of water. The lay barge is shown at the left hand side of FIGURE 1 and is indicated generally by the reference numeral **1**. The pipe which is to be laid **2** is shown being fed from the barge and descending to the bottom of the body of water. For simplicity, the body of water will hereafter be referred to as a "lake" although it is understood that the present invention may be used to lay pipe in any other type of body of water. As the pipe **2** descends, a float or ballast train, indicated generally by the numeral **3**, is utilized to prevent the pipe from suddenly dropping off or from descending at too great a rate. The ballast train **3** also provides a uniform rate of descent for the pipe, thereby preventing possible damage to the pipeline which may result from irregular and uneven movement of the pipe from the lay barge **1** to the trench. The ballast train **3** is made up of independent float members **4**, which are in turn, composed of float tanks **5** to provide the necessary ballast, and guide means **6** to support the pipe. The cable **7** is connected to the lay barge at one end and to the trenching mechanism at its other end and is attached to the individual float members **4** at various points, intermediate of its ends. The line **7** prevents the float means from rising to the surface and maintains them in the proper angle of descent. The line **7** is attached to the trenching mechanism **50** by the yoke **73** and the lugs **74**. Reel or cable drum means **8** are located on the barge to maintain the proper tautness in the cable **7**, thus compensating for any change in distance between the lay barge and the trenching mechanism. The structure of this specific float arrangement is described in more detail in my co-pending application Ser. No. 83,290, filed Jan. 17, 1961.

The trenching mechanism **50** and the back filler **77** is pulled along the bottom **9** of the lake by means of a towing cable **10**. Referring now to FIGURE 2, the towing cable **10** is fed from a reel or cable drum **11** located in the front or left-hand end of the barge **1** as seen in FIGURE 2. The towing cable then passes rearwardly beneath the barge through appropriate pulleys and guides to connect the trenching apparatus **50** as will be described below.

Turning now to FIGURES 11 and 12, an optional means by which the pipe **2** and towing cable **10** may be fed from the lay barge **1** is shown in greater detail. Located at the rear of the barge is a rectangular frame member **12**. This rectangular frame member is composed of two vertical members **13** and **14** the ends of which are connected by two horizontal members **15** and **16**. This frame may be fastened together by any well-known means such as welding or bolting that provides sufficient rigidity for the purposes herein set forth. On the upper portion of the rectangular frame **12** are located two side guide rollers units **17**. The rollers in the units **17** rotate about a vertical axis and act against the sides of the pipe **2** as is best shown in FIGURE 12. One side guide roller unit **17** is mounted on each of the vertical members **13** and **14** and cooperate to prevent any lateral motion of the pipe while it is being fed into the water. Located on and at the rear of the barge **1** is bottom guide roller unit **18**. The rollers in unit **18** rotate about a horizontal axis and act against the bottom of the pipe **2** to provide support for the pipe. Extending rearwardly from the vertical members **13** and **14** are the support members **19**. Members **19** lie in a horizontal plane and are reinforced by the diagonal members **20**. A conventional Athey track **21** is supported at the free or outer ends of the horizontal members **19**. The Athey track provides additional support for the pipe as it leaves the barge **1** and positions it for the proper angle of descent. The Athey track is rotatable about the horizontal axis **21** so that the angle of descent may be varied. Also located on the Athey track are side guide roller units **22** (only one of which is shown in FIGURE 11).

Turning now to the towing cable, as can be seen in FIGURE 11, the cable is fed from the reel **11** which is located at the front of the barge. The cable is then passed rearwardly beneath the barge to the lowermost portion of the rectangular frame **12**. A rod **23** is rotatably mounted at the lower ends of the vertical members **13** and **14** and is prevented from sliding out of the vertical members by the cotter pins **24**. Also rotatably mounted on the lower portion of the vertical members **13** and **14** is the cylindrical member **25**. The towing cable **10** passes between these rotatable members **23** and **25** as well as the yoke **26** and the guide roller **27**. The yoke **26** and guide roller **27** are supported by the members **28** which are attached to the vertical members **13** and **14** as is best seen in FIGURE **12**. A crossplate **29** acts in sliding contact with the roller **25** to properly position the yoke **26** and roller **27**. By the cooperation of the rollers **23**, **25** and **27** and the yoke **26** the towing cable **10** is maintained in proper position for towing the trenching mechanism **50** at all times.

Referring now to FIGURE 2, there is shown a plan view of the lay barge including the apparatus used in pulling the barge which is located at the front or left-hand side of the barge as seen in FIGURE 2. At the rear of the barge the apparatus described above for feeding the pipe into the water is shown. As the pipe **2** is fed into the water, additional lengths of pipe **2'** must, of course, be added to the pipe. Welding stations may be located on the barge for attaching one or more lengths of pipe **2'** simultaneously. Additional lengths of pipe are stored as indicated by the numeral **2''** for future use. As shown in FIGURE 11, additional Athey tracks **30** are utilized on the deck of the barge as is necessary, depending on the length of the pipe on the barge and the number of welding stations adding additional lengths of pipe to the pipe string **2**.

Guide anchors **31** are shown at each corner of the barge **1**. Reels are located on the barge deck from which cables extend to the anchors. As the barge **1** is moved forward, the cable is taken in from the anchors located at the front

of the barge as shown by the arrows, and the cable is let out from the reels at the rear of the barge, also shown by the arrows. By keeping the cables to the guide anchors taut, the barge may be maintained in its desired path of travel. Various combinations of letting out and taking in of the cable to the guide anchors, will give the barge a certain amount of maneuverability. Under the present system of pulling the barge, to be discussed below, guide anchors are not normally necessary. However, they may be used in especially choppy water or rough weather. Additional guide anchors may also be located on the mid-portions of the barge **1**.

The pipe **2'''** in FIGURE 3 has been previously strung across the bottom of the bay. This figure depicts the utilization of the present invention to bury such a pipe. The Athey track **56** located on the trenching mechanism **50**, and which will be discussed more fully below, is shown in a lowered and horizontal position as compared with its position in FIGURE 1.

Turning now to FIGURES 4 and 5, the actual trenching mechanism **50** and its associated backfiller **77** is shown in greater detail. The trenching mechanism itself, hereinafter referred to as a plow, includes as the front portion a sled **51**. The sled **51** has an inclined bow **52** which aids in reducing the friction produced by pulling the sled across the floor of the bay and aids the plow in moving over a rough surface. The towing cable **10** is attached by means of the yoke **53** to lug members **54** also located at the bow or front portion of the sled **51**. Located in the sled is a recessed bay area **55** in which is located an Athey track **56**. The Athey track **56** is mounted in socket members **57** by means of the right angle support members **58**. This mounting arrangement can better be seen in FIGURE 6. On both sides of and at both ends of the Athey track **56** are located side guide rollers **59**. These guide rollers **59** act against the sides of the pipe **2**, shown in FIGURE 5 in broken lines, to prevent any lateral movement of the pipe and to aid in aligning the pipe with the trench. Other conventional guide and support means may be substituted for the Athey track **56**.

Also located near the front of the sled **51** are socket members **90**. The guide means including the control rods **92**, shown in FIGURE 6 and discussed below with regard to FIGURE 6, extend from said sockets **90** and slidably engages the pipe **2**. The rudders **91** which control the direction of movement of the plow can be seen in FIGURE 5. Located above the rear of the sled **51** is a U-shaped support member generally indicated by the numeral **60**. This support member is braced by the members **61** and **62** and provides support for the yoke **73** and cable **7** supra and helps locate the pipe **2** as it passes over the plow. An additional pipe support **63** is located at the front of the sled.

The sled **51** is a hollow member and can be filled with air through suitable valve means (not shown) to raise the plow to the surface or otherwise to provide buoyancy. When it is desired to place the plow **50** on the bottom of the bay, the sled is appropriately weighted. Lugs **64** are located on either side of the sled and are used to attach additional pontoons or ballast tanks as is necessary. Similarly, additional ballast may be located at the rear of the plow.

The rear portion of the plow is the actual trenching portion, a front sectional view of which is shown in FIGURE 8, to which reference is now made. The plow is connected to the sled **51** by members **85** and is composed of a center blade **65** which divides the plow into two equal segments. Each segment has a common base member **66** and an outer side wall **67**. The leading edges of the bottom **66**, the side wall **67** and the divider or center blade **65** are the actual cutting edges which cut the trench. All of the outer cutting edges are provided with clearance as further described hereinafter. The plow portions are further comprised of a sloping back wall **68** which slopes rearwardly from the bottom of the plow to the top. Thus two substantially equal compartments or plowing portions being essentially U-shaped in cross-section are formed by the members **65, 66, 67** and **68**. Due to the forward motion of the trenching members **65, 66** and **67**, the spoil which is dug from the trench moves up the back wall **68** to the top of the side wall **67** which is at least as high as the trench is deep. Extending outwardly from the divider **65** are two wings or spreaders **69**. The wings **69** form a V with the apex being the forwardmost portion and being integral with the divider **65**. The spreaders are curved as is best seen in FIGURE 6 and provide a means by which the spoil which has been pushed to the top of the plow is displaced away from the trench to prevent it from spilling back into the trench.

Located behind the wings **69** and providing additional strength for the wings is a brace rod **70**. Also located behind and between the wings **69** are additional side guide rollers **71** and bottom guide rollers **72**. These guide rollers provide additional support and guidance for the pipe **2** and insures that the pipe leaves the plow in proper position to be received into the trench.

Under certain circumstances, after the pipe **2** is laid in the trench, it may be desired to backfill the trench. A backfiller **77** which may advantageously be used for this purpose will now be described. Cables **76** are attached to lugs **75** located at the rear of the plow and to the backfiller **77**. The backfiller **77** provides means by which the spoil that has been dug from the trench and spread by means of wings **69**, is returned to the trench, thereby covering the pipe which has been laid. The backfiller **77** has two lead portions **78** which move in the trench that has been dug, thus providing guidance for the backfiller. It is further comprised of wing members **79** which are of greater width than the spreaders **69** on the plow. As can be seen in FIGURE 4, the member **79** converge toward the rear of the backfiller **77** and the spoil is channeled by the members **79** inwardly to pass through the open portion **80** back into the trench, thus covering the pipe. The back member **81** prevents the spoil from leaving the backfiller by means other than through the opening **80**.

Referring now to FIGURE 6, there is shown the control apparatus used to guide the plow **50** in the path from which the pipe is fed, and to react to any changes in direction of the pipe feed, adjusting the direction of travel of the plow, accordingly. The actual controlling structures are the rudders **91** shown beneath the sled **51**. Control rods **92** attached to the rudders **91** extend up through the sled **51** and the sockets **90** located on the top of the sled. The rods **92** are then bent at an angle between 0° and 180° and are connected to the plate **93** by means of the nuts and bolts or other suitable attaching means **94**. The portion of the control rods extending outwardly from the sockets **90** and connected to the plate **93** are indicated by the numeral **92'**. The plate **93** is rotatably mounted on the control housing **95** by the pivot member **96**. The control housing **95** may contain two rows of parallel rotatable members **97**. As shown in FIGURE 7, an end view of the control housing taken along line 7—7 of FIGURE 6, the rotatable members **97** have reduced midsections which generally conform to the outside diameter of the pipe **2**. The members **97** are spaced within the housing so as to be in rotatable contact with a portion of the pipe **2** at all times. As will be described hereinafter, displacement of the housing **95** results in corresponding adjustment of the rudders **91** to guide the trencher.

The present invention also employs a novel method of pulling the lay barge and trenching apparatus which has not been heretofore utilized in underwater pipe trenching. The apparatus employed in this method is shown in FIGURES 13 through 15. Two sleeve-drums **110** and **111** are mounted on support members **112** so as to rotate on horizontal axes in a clockwise or counterclockwise direction. The towing cable **113** is passed about the sleeve-drums **110** and **111** a sufficient number of times to provide sufficient frictional contact for the purposes to be herein set forth.

A first end of the cable **113'** is taken from the front sleeve-drum **110** and is passed through the guide means generally indicated by **115'**. Referring now to FIGURE 14, a typical guide means is shown and is generally indicated by **115**. The guide means comprises sideplates **116** and roller members **117, 118,** and **119**. As can best be seen in FIGURE 13, the roller members are tapered toward their midportions thus conforming to the circular cross section of the towing cables **113**.

Referring back to FIGURE 13, the cable end **113'** is passed through the guide means **115'** and is attached to an anchor **130'** and a tug **114'**. In a similar manner, cable end **113''** is passed through guide means **115''** and is attached to a tug **114''** and anchor **130''**. As shown on the drawing, the cable end **113'** is substantially longer than the corresponding end **113''**. A reversible motor **120** is connected by an appropriate drive train **122** to the sleeve-drums **110** and **111**, and by this arrangement, the sleeve-drums **110** and **111** may be rotated either clockwise or counterclockwise as may be desired. The outer surface of the sleeve-drums **110** and **111** may include grooves **123** to receive the cable **113** as it is passed about the sleeve-drums. To prevent the cable from leaving the grooves, guide members **124** may be employed. An elevation view of a guide member **124** is shown in FIGURE 15. Grooves **125** corresponding to the grooves **123** on the sleeve-drums **110** and **111** are located on the members **124**. The guide members **124** are held securely by means of suitable conventional support members (not shown), and they may also be used as brakes for the drums.

Referring now to FIGURE 9, a bottom view of the preferred embodiment of the present invention is disclosed. One of the primary advantages found in the present invention is demonstrated by this view. As can be seen, the outer surface of the actual plowing portion is composed of the bottom member **66** and the side members **67**. The side members **67** are relatively far apart at their front ends as compared to the distance apart at their rearmost portions. In other words, the width of the portion which actually digs the trench, tapers in width from the front to the back. Referring to FIGURE 5, it can be seen that the bottom **66** of the plow is inclined upwardly from the front to the rear. In this manner, clearance behind the cutting edges is provided. This is also true of the modified embodiment shown in FIGURE 10. The advantages resulting from the structural features just mentioned will be discussed below with regard to the operation of the device.

Referring now to the modified embodiment of FIGURE 10, it will be noted that the leading edge of the plow portion, indicated at **67'**, is set back from the sled **51** a substantially greater distance than in the case of the principal embodiment. The divider **65** is shown to extend from the leading edge **67'** of the plow to the rear of the sled **51**. This portion of the divider **65** is indicated at **65'**. The depth of the cut is controlled to a certain extent by the distance which separates the leading edge of the plow **67'** and the sled. FIGURE 10 shows what the trenching apparatus of the present invention would look like with this distance lengthened. While it is not necessary that the divider **65** be extended from the leading edge to the rear of the sled, as is shown in FIGURE 10, this feature allows the plow to rise over logs, etc., on the bottom.

The operation of the present invention is substantially as follows: The pipe **2** is fed from the lay barge **1** at the rear thereof through the rectangular support frame **12** and its associated guide rollers **17** and **18**. The proper angle of descent is imparted to the pipe **2** by means of the Athey track **30** located at the rear of the lay barge. As shown in FIGURE 1, the Athey track **30** and its supporting structures may be so arranged that the track actually extends beneath the surface of the water. As seen in FIGURE 11, however, the Athey track may be completely out of the water. The proper angle of descent is maintained by use of the float apparatus shown in FIGURE 1. The independent float means **4** with its associated holding means **6** holds the pipe in sliding engagement, thereby preventing it from dropping off sharply and also provides guiding means to the trenching apparatus. As the pipe is fed into the water, additional lengths of pipe **7'** are attached to the pipe string **2**, for example, by welding. Where the present invention is used to bury pipe that has been previously strung across the floor of the body of water, the feeding apparatus shown in FIGURE 1 is, of course, dispensed with and only the towing cable **10** extends from the sled **1**. The towing cable **10** passes through the guide means on the rectangular frame **12** and is attached by means of the yoke **53** to the plow **50** and gives the plow its forward motion. Should the towing line **10** acquire some slack, this may be taken up by the reel or cable drum **11**.

As the pipe **2** approaches the plow, it passes through the guide housing **95**. The pipe then proceeds over the Athey track **56** between the rollers **59**, over the support member **60** and finally between the guide rollers **71** and **72**. At this point the pipe drops into the trench as is best shown by the broken lines in FIGURE 5. The guide housing **95** properly positions the pipe on the plow **50** and the rollers and support means located on the plow maintain the pipe in its proper path of travel. By comparing FIGURES 1 and 5, one can see that the Athey track **56** may vary in height and position to correspond with the angle of descent of the pipe. The angle of descent will, of course, vary depending upon the depth of the water, among other things.

As the plow moves forward, the leading edges of the divider **65**, the bottom portion **66**, and the side walls **67**, bite into the earth, thereby cutting the trench. The forward motion of the plow causes the spoil to be forced to the top of the plow up the sloping back walls **68**. From this point the spoil is forced outwardly along the spreaders **69** as indicated by the arrows in FIGURE 4 and is deposited in two parallel rows on either side of the trench. Due to the decrease in width of the members **66** and **67** (as best seen in FIGURE 9) and to the upward inclination of the bottom member (as seen in FIGURE 5), only the leading portions of the trenching apparatus contacts the earth at the bottom of the body of water. This clearance or decrease in dimensions of the trenching mechanism from the front to the rear greatly lessens the drag and pressure that would otherwise be exerted by the side walls and bottom of the trench, thus making for greater ease of pulling and decreasing the possibility of cable breakage. It will also be noted in looking at FIGURE 8 that the width of the trenching mechanism increases substantially from the bottom to the top. This allows the dirt to move upwardly with as little resistive force being created as possible. As one can readily see, one of the primary objects set forth at the outset has been accomplished by this uniquely designed trenching apparatus, i.e., the reduction of drag on the two cables and the other trenching apparatus, thereby provide for greater ease and reliability of trenching.

As the plow moves forward cutting the trench, the pipe **2** is fed into the trench behind the plow as shown in FIGURE 5. Following behind the plow **50** is the back filler **77**, the wings **79** of which contact the parallel rows of spoil and convey it back into the trench through the opening **80** in the back filler. The leading members **78** of the back filler extend into the trench thus preventing the back filler from straying from its desired path.

Referring now to the perspective view of the plow shown in FIGURE 6, the apparatus used to guide the plow is disclosed. The string of pipe **2** extending from the lay barge, or which has been previously strung on the bottom of the body of water extends through the guide housing or collar **95** and between the rotating guide members **97** located within the housing. Depending upon whether the pipe is being laid simultaneously with the digging of the trench or whether it has been previously laid, the guide housing **95** may be in a raised (as shown

in FIGURE 1) or a lowered (as shown in FIGURE 3) position. The support arms **92** and **92'** may be positioned at any appropriate angle to correspond with the angle of pipe feed.

Should the pipe string **2** move to the right to left, the guide housing **95** will also move. This motion is transmitted through the plate **93**, the support arms **92'** and **92** to the rudders **91**. The rudders will move in response to the movement of the guide housing **95** and will, accordingly, change the direction of the plow **50** to correspond with that from which the pipe string **2** is received.

One can accordingly see that additional desired objectives are accomplished by the present invention. The previously described and discussed guide means will react to and compensate for any change of direction of pipe feed, thereby insuring the proper alignment of the pipe **2** with the trench that is being dug. The plow will react to any sudden and unexpected shift in direction of feed, as well as any change of direction of the lay barge **1** which will be transmitted along the pipeline. By this means, the path of the trench may more accurately be controlled from the surface.

Turning now to the novel method by which forward motion is imparted to the trenching apparatus, as is illustrated in FIGURE 13, one end **113'** of a cable **113** is attached to a tug indicated at **114'**. A substantial portion of the cable located intermediate of its ends is passed about the sleeve-drums **110** and **111** in the grooves **123**. The other end **113''** of the cable extends from the forward sleeve-drum **110** through its guide means **115''** and is attached to a second tug **114''**. At the start of the pull, one of the tugs **114'** is located a substantial distance from the barge **1** where it has set its anchor **130'** in the bottom. The second tug **114''** is relatively close to the barge. The motor **120** is then operated through the drive train **122** to rotate the drums **110** and **111** to cause the cable end **113'** to be taken up, pulling the barge **1** toward the tug **114'**. Slippage about the sleeve-drums **110** and **111** is prevented due to the frictional contact between the cable **113** and the sleeve-drums caused by the large number of times the cable is passed about the sleeve-drums. As the cable end **113'** is taken up, the cable end **113''** is let out a like amount from the sleeve-drums. While the barge is pulling itself toward the first tug **114'**, the second tug **114''** is continuously moving away from the barge **1** so that when the barge reaches the first tug, the second tug is a substantial distance away from the barge. The second anchor **130''** is now held stationary and the motor is reversed, thereby rotating the sleeve-drums in the opposite direction. This causes the cable end **113''** to be taken in thus pulling the barge forward to the second tug **114''**. Simultaneously, the end **113'** increases in length as the end **113''** decreases in length, and the first tug **114'** proceeds away from the barge as its cable end permits. Once the second barge **114''** is reached, the motor **120** is once again reversed and the anchor **130'** is held stationary. The barge is then drawn to the tug **114'** as before. Thus, the tugs, in effect, leapfrog each other and in so doing the barge is pulled forward in an almost continuous process, stopping only for the furtherest barge to drop and set its anchor so that it may remain stationary while the barge **1** pulls itself to the tug.

By use of the above foregoing method and apparatus of moving the lay barge and associated trenching apparatus, the time necessary to perform the trenching operation is reduced a very substantial amount. During the actual pulling operation, speeds of up to one foot per second may be achieved. As discussed, the only stop time necessary in the pulling operation is for the furthermost tug to set its anchor. Prior to the present invention only one tug was used and required substantially greater time. The cable was let out its full length and the tug would move as far away from the barge as the cable would permit. It would then set its anchor and the barge would pull itself to the tug. The cable would then have to be unwound, and the tug moved forward and again set its anchor. Thus the down time in the prior art method was substantial, whereas the down time in the present method is quite small.

It should be pointed out that the present method may be used with only one tug. A stationary anchor instead of a tug may be used to pull the barge **1** to, the tug moving forward with the lengthening end of the cable. When the first anchor is reached, the tug sets the second anchor, and then proceeds back to take up the first, while the barge moves onto the second anchor. As can be seen, the down time here is considerably less than that of the prior art method. Where two tugs are used, the additional guide anchors shown in FIGURE 2 are not usually necessary since the separate action of the tugs may be used to control the barge. In rougher water or weather, the guide anchors are required.

Although a particular embodiment has been described and discussed herein, it should be understood that it has been used merely for purposes of illustration. Variations and modifications can be effected and the invention herein is not limited to the particular embodiment disclosed. Other embodiments may be effected within the spirit and scope of the invention as described hereinabove and as defined in the appended claims.

What is claimed is:

1. In an underwater pipe laying apparatus having means to guide a pipe over a trench, an improved device for forming the trench including:

two adjacent plow members having a common sidewall,

the leading edge of each of said members arranged to cut the trench and being essentially U-shaped,

a rear plate in each of said plow members sloping rearwardly and upwardly from near the leading edge of the bottom thereof,

a spreader at the top and to the rear of each plate and extending laterally outwardly from the common sidewall of each plow member, and

means to pull said device forward whereby the trench is dug by the leading edges of the plow members and the spoil from the trench is forced up said rear wall and along said spreaders away from the trench by the forward movement of the device.

2. The invention of claim **1** wherein the device is further defined as having the spreaders connected together essentially in the form of a V, the apex being forward and being aligned with the common wall.

3. The invention of claim **2** wherein the device further includes:

a forward sled portion, said sled portion mounted to said plow members, and

each of said plow members including a bottom wall, an outer sidewall, the rear wall and the common sidewall, said walls extending below said sled and being at least as high as the trench is deep,

the outer sidewalls of the plow members sloping outwardly from the bottom thereof whereby the trench that is cut is of greater width at its top than its bottom.

4. The invention of claim **3** wherein:

said outer sidewalls are the furthest apart at their leading edges than at any other portion throughout their length whereby, when said plow is pulled to cut the trench, only the leading edges contact the soil and clearance is provided so that the remainder of the sidewalls of the plow do not touch the sides of the trench.

5. The invention of claim **4** wherein:

the leading edge of the bottom wall is the lowermost portion thereof, whereby only the leading edge of the bottom wall touches the bottom of the trench and clearance is provided so that the remainder of

the bottom wall is prevented from sliding on the bottom of the trench.

6. The invention of claim 1 and further including:

a sled portion located in front of said plow members and having an inclined bow portion for ease of movement over the bottom,

said plow members being attached to the rear of said sled and extending from the bottom of the sled to below the bottom thereof,

the outer sidewalls of the plow portions extending upwardly and outwardly from the bottom thereof, said outer sidewalls converging toward their rear portions so as to provide clearance between the sidewalls and the trench,

the rear wall increasing in width from its bottom to its top to correspond to the increase in distance separating the common wall and the outer sidewalls resulting from the outward inclination of said outer sidewalls,

the bottom of said plow portions being inclined upwardly from the front to the rear whereby the leading portion of the bottom is the lowermost part of the device, and

said spreaders being joined together at one of their ends, said joint lying in the same plane as is the common wall and being positioned so as to convey away from the trench the spoil forced upwardly from the trench.

7. The invention of claim 6 and further including:

guide means located on said device to maintain the path of travel of said device in line with the pipe that is being laid, and

said means to pull said device, including a surface vessel and at least one tug and anchor.

8. An improved underwater trenching device including:

a sled,

said sled having an inclined portion for ease of movement over the bottom of the body of water,

means for adjusting the buoyancy of said sled,

a pair of plow members,

connecting means attaching said plow members to said sled,

said plow members having a common divider blade located rearwardly and centrally of said sled, said divider blade extending below said sled,

each of said plow members having a bottom cutting member extending laterally substantially horizontally from its respective side of said divider blade, said bottom cutting members being below the sled, the leading edge of said bottom cutting members being the lowermost point of the plow members, thereby providing clearance between the bottom cutting members and the trench,

side cutting blades extending outwardly and upwardly from the outer edges of the bottom cutting members to at least the bottom of the sled, the foremost cutting edges of said side cutting blades being spaced laterally apart further than the remaining portions of said side cutting blades, thereby providing clearance between the sidewalls and the sides of the trench,

a back plate connecting the bottom cutting members, the side blades, and the divider blade, thereby forming a three-sided plowing member,

spreader members mounted above the cutting blades and extending laterally from opposite sides of the divider blade to form substantially a V-shaped element,

the apex of said V-shaped element being its forwardmost point, and lying in the same plane as said divider blade,

means located on said trenching device to guide and convey pipe across the top of said trenching device and into the trench at the rear of said trenching device, and

a back filler mounted behind said trenching device to convey the spoil back into the trench to cover said pipe.

References Cited

UNITED STATES PATENTS

1,152,326	8/1915	Lewis	61—72.4
2,248,243	7/1941	Lawton	61—72.6 X
2,755,632	7/1956	Hauber et al.	61—72.4
2,765,548	10/1956	Glaser	61—72.4 X
2,879,649	3/1959	Elliott	61—72.4
2,880,937	4/1959	King.	
2,992,537	7/1961	Callahan	61—72.4
3,004,392	10/1961	Symmank	61—72.6 X
3,103,790	9/1963	Popich	61—72.6 X
3,153,330	10/1964	Melin	61—29
3,251,332	5/1966	Vassar	61—72.3 X

EARL J. WITMER, *Primary Examiner.*