(No Model.) 2 Sheets—Sheet 1.

J. H. STEVENS, Jr.

WATER CLOSET.

No. 590,244. Patented Sept. 21, 1897.

Fig. 1

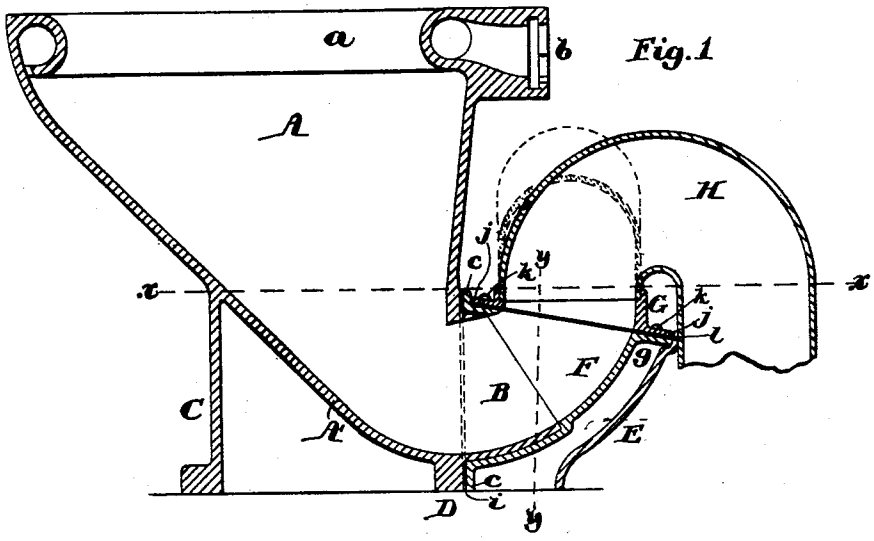

Fig. 2.

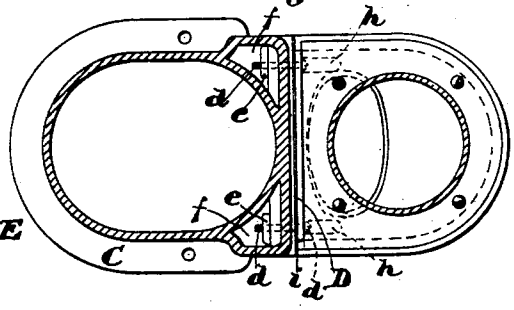

Fig. 3.

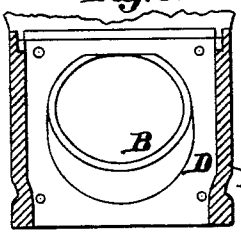

Fig. 4.

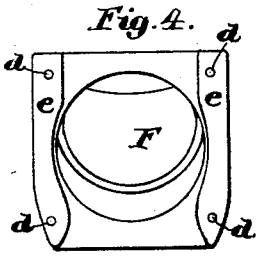

Fig. 5

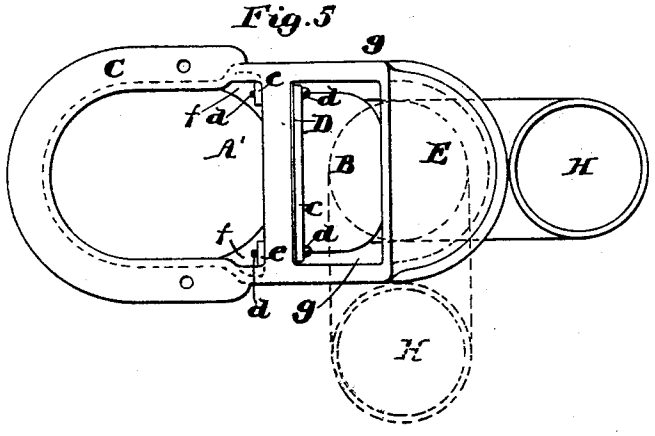

Witnesses:
Walter E. Lombard.
William E. Davis

Inventor:
John H. Stevens, Jr.,
by N. C. Lombard
Atty.

THE NORRIS PETERS CO., PHOTO-LITHO., WASHINGTON, D. C.

(No Model.) 2 Sheets—Sheet 2.

J. H. STEVENS, Jr.

WATER CLOSET.

No. 590,244. Patented Sept. 21, 1897.

Fig. 6.

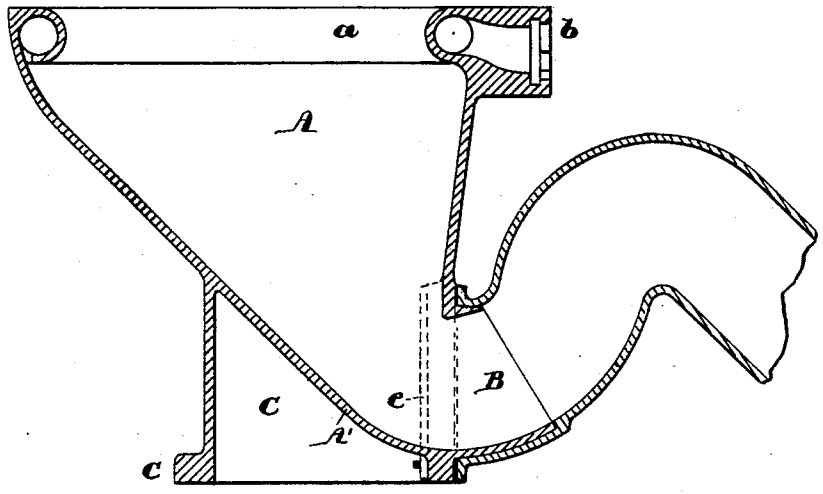

Fig. 7.

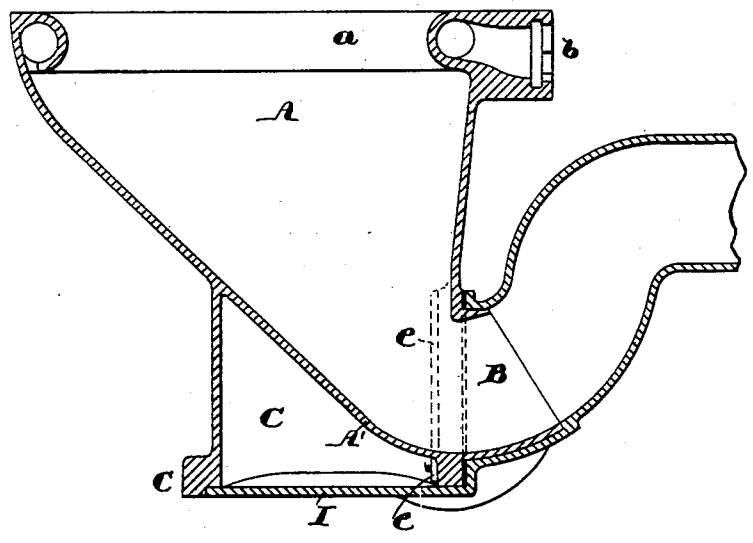

Witnesses:
Walter E. Lombard
William E. Davis

Inventor:
John H. Stevens, Jr.,
by N. P. Lombard
Atty.

THE NORRIS PETERS CO., PHOTO-LITHO., WASHINGTON, D. C.

UNITED STATES PATENT OFFICE.

JOHN H. STEVENS, JR., OF CAMBRIDGE, MASSACHUSETTS.

WATER-CLOSET.

SPECIFICATION forming part of Letters Patent No. 590,244, dated September 21, 1897.

Application filed April 26, 1897. Serial No. 633,837. (No model.)

To all whom it may concern:

Be it known that I, JOHN H. STEVENS, Jr., of Cambridge, in the county of Middlesex and State of Massachusetts, have invented certain new and useful Improvements in Water-Closets, of which the following, taken in connection with the accompanying drawings, is a specification.

My invention relates to water-closets; and it consists in certain novel features of construction, arrangement, and combination of parts, which will be readily understood by reference to the description of the accompanying drawings and to the claims hereto appended and in which my invention is clearly pointed out.

Figure 1 of the drawings is a central vertical section of a water-closet embodying my invention. Fig. 2 is a sectional plan, the cutting plane being on line *x x* on Fig. 1. Fig. 3 is a vertical section through the jacket on line *y y* on Fig. 1, looking toward the left of said figure, with metal pipe removed. Fig. 4 is an elevation of that end of the metal discharge-pipe that is bolted to the earthenware flange of the closet with the metal nut-plates and bolts attached thereto. Fig. 5 is an inverted plan of the bottom of my improved closet, and Figs. 6 and 7 are central vertical sections of modifications of my improved closet.

In the drawings, A is the closet-bowl proper, provided with the flushing-rim *a* and the nozzle *b*, to which the water-supply pipe is to be attached in any well-known manner.

The general outline of the closet as viewed in plan is oval, and the dip or lowest part of the discharge from said closet is directly beneath the rear wall of said bowl, which at its center is only slightly inclined to a perpendicular, as shown in Figs. 1, 6, and 7. The earthenware closet is also provided with the circular discharge-nozzle B, which extends a short distance to the rear of the nearly perpendicular wall of said bowl and is curved upward, with its rear end inclined to a vertical plane.

C is the supporting-base, extending from a point beneath the rear side of the nearly perpendicular wall of the bowl forward and inclosing the lower portion of the bowl, and having its rear face D in the form of an annular vertical or nearly vertical flange or flat plane surrounding the nozzle B, directly beneath the rear side of said nearly perpendicular wall, as shown in Figs. 1, 6, and 7.

The bowl A, nozzles B *b*, base C, and flushing-rim *a* are all formed in one piece of earthenware, as shown in Figs. 1, 6, and 7.

In some cases I provide the earthenware closet with the jacket E, open at the top and bottom and formed integral with the bowl, as shown in Figs. 1, 2, and 5.

F is a metal elbow-pipe fitted to and inclosing the earthenware nozzle B and provided with the flange *c*, which is secured to the vertical or nearly vertical flange or flat surface D by the bolts *d d*, which pass through said flange *c* and the earthenware flange C and are screwed into the metal plates *e e*, located in the pockets *f f*, formed between the base-shell and flange D and the shell A′ of the discharge-passage from said bowl, as shown in Figs. 2, 4, and 5.

The elbow-pipe F is also provided with the flange *g*, one half of which is rectangular and the other half semicircular, the straight side of which abuts against the flange *c* and has cut through it the two slots *h h* to facilitate the insertion of the two upper bolts *d d* for securing said elbow-pipe to the earthenware closet. The flange *g* of said elbow-pipe F fits into a rabbet in the upper edge of the jacket E, but is not bolted or otherwise clamped thereto and does not form a close or packed joint therewith; but the joint between the flange *c* and the surface D of the earthenware closet is packed to form a liquid-tight joint by means of a rubber gasket *i* or by a red-lead or other suitable packing.

The upper edge of the jacket E and the flange *g* is inclined to a horizontal plane, the extreme rear being the lowest.

A hard-metal ring G, having a flange *j* of the same size and shape as the flange *g*, except that it is not provided with slots corresponding to the slots *h h* in said flange *g*, is firmly secured to said flange *g* by the bolts or screws *k k*, the upper edge of said ring C being in a horizontal plane, as shown, and has soldered therein the lead pipe H, bent to form a reverse curve to the elbow-pipe F and projecting perpendicularly downward, as shown in Fig. 1, or it may project obliquely

downward, as shown in Fig. 6, or horizontally to the rear, as shown in Fig. 7, according to the requirements of the situation where the closet is to be placed.

The pipe H may be soldered to the ring G so that its long branch shall be at the rear of the jacket E, as shown in full lines in Fig. 1, or to one side of said jacket, as indicated in dotted lines in Figs. 1 and 5.

The joint between the flanges *g* and *j* is packed to form a liquid-tight joint in any well-known manner, as indicated at *l* in Fig. 1.

In some cases I have the earthenware closet made without the jacket E and make the metal portion of the discharge-pipe in one piece, preferably of cast metal, and secure it to the flange or surface D of the earthenware, as hereinbefore described and as indicated in Fig. 6, and in other cases I cast the metal discharge-pipe with a plate I extending beneath the base C of the earthenware closet to serve as a support for said closet, said base being formed to inclose said plate, as shown in Fig. 7.

The joint between the earthenware closet and the metal discharge-pipe is submerged in the water contained in the trap and sealed, so as to prevent all liability of the escape of gases at the joint, as is also the joint between the two sections of metal pipes.

Another advantage of my invention is that the bolts and nuts for securing the metal pipe to the earthenware closet and the threaded ends of the bolts by which the two sections of metal pipes are secured are hid from view by being inclosed within the jacket E and the pockets *f f*, so that they do not interfere with the cleaning of the closet.

The advantages of the construction shown and described are as follows:

Making the joint between the earthenware and the metal portion of the trap vertical or nearly vertical completely seals said joint against the escape of gas that cannot be seen and at the same time renders it possible to place the closet in position and connect it to the closet-bend H after said bend has been permanently secured to the soil-pipe, or said closet may be removed for repairs and replaced without breaking the joint between the closet-bend and the soil-pipe.

The employment of the elbow-pipe F between the earthenware closet and the hard-metal ring G, to which is soldered the lead pipe or "closet-bend," so-called, H, is a great advantage in that it renders it possible to permanently secure the metal portion F of the trap to the crockery in the shop after having turned the contiguous faces of the flange *g* of said pipe F and the ring G and drilled the bolt-holes in said ring and flange and set said flange to templets, so as to make said closets interchangeable, which would not be possible if the closet-bends were bolted directly to the crockery, and thereby greatly reduce the labor to be done in setting up the closet in the building where it is to be used.

The extension of the discharge-nozzle B beyond the annular flange or flat surface D is advantageous in that the joint between the crockery and metal is hid from view, and it also facilitates the upward turning of the water when being discharged from the bowl.

The jacket E, formed integral with the closet-bowl, incloses and hides from view the metal elbow-pipe F and the heads of the bolts *d d*, by which the said pipe is secured to the crockery, the opposite ends of said bolts being inclosed in the pockets *f f*, thus completely removing said bolts from view and from interfering in any way with the cleaning of the exterior of the closet.

Another advantage of this construction is that the closet-bend H may be extended to the rear, as shown in full lines in Fig. 1, to one side at right angles or any other desired angle to said rearward position without change in other parts of the construction.

The base-plate I, extending beneath the closet, in the case of an iron closet-bend being used is an advantage in that the closet will be supported against settling should the floor shrink or settle.

What I claim as new, and desire to secure by Letters Patent of the United States, is—

1. A water-closet bowl provided with means for flushing it, a discharge leading downward and outward therefrom, a vertical or nearly vertical flange or flat surface located intermediate between said bowl and the end of said discharge, and a jacket surrounding the outwardly-projecting portion of said discharge and open at top and bottom all formed in one piece of earthenware.

2. A water-closet bowl provided with means for flushing it, a discharge leading downward and outward therefrom, a vertical or nearly vertical flange or flat surface located intermediate beween said bowl and the end of said discharge, an open-bottomed base beneath said bowl, and a jacket surrounding the outwardly-projecting portion of said discharge, and open at its top and bottom all formed in a single piece of earthenware.

3. In a water-closet the combination of a bowl provided with means for flushing it and a discharge leading downward and outward therefrom and forming part of a trap; a vertical or nearly vertical flange or annular flat surface surrounding said discharge at or near the limit of the downward dip thereof; and an open-ended base beneath said bowl, all formed in one piece of earthenware; and a metal discharge-pipe shaped to form the other part of said trap and provided with a flange to abut the earthernware flange; the nut-plates *e*, *e*, located within said base; and the bolts *d*, *d*, passing through both of said flanges and screwed into said plates.

4. The combination in a water-closet of a bowl provided with means for flushing it, and with a discharge leading downward and outward therefrom and forming a part of a trap; a vertical or nearly vertical flange or annular

flat surface surrounding said discharge intermediate between its end and said bowl; the base C; all made in one piece of earthenware; and a metal discharge-pipe shaped to form the other part of said trap, and provided with a flange to abut the earthenware flange, and with the plate I to extend beneath said base; the nut-plates *e*, *e*, located on the side of the earthenware flange opposite to said metal discharge-pipe; and the bolts *d*, *d* passing through both of said flanges and screwed into said plates.

5. The combination in a water-closet of a bowl provided with means for flushing it, and with a discharge leading downward and outward therefrom, and forming part of a trap; a vertical or nearly vertical flange or flat annular surface surrounding said discharge intermediate between its end and the bowl; a supporting-base beneath said bowl; and a jacket at the rear of said flange surrounding the outwardly-projecting portion of said discharge, and open at its top and bottom, all formed in one piece of earthenware; the metal elbow-pipe F fitted to receive and inclose the outwardly-projecting portion of the discharge of the bowl, and provided with the flange *c*, to abut the flange of the bowl, and the flange *g* at its other end; the nut-plates *e*, *e* located on the side of said earthenware flange opposite to said elbow-pipe; the bolts *b*, *b* passing through the flange *c* and the earthenware flange, and screwed into the plates *e*, *e*; the flanged metal ring G bolted to the flange *g*; and the pipe H soldered to said ring G, said elbow-pipes F and H being shaped to form the other part of said trap.

In testimony whereof I have signed my name to this specification, in the presence of two subscribing witnesses, on this 23d day of April, A. D. 1897.

JOHN H. STEVENS, JR.

Witnesses:
N. C. LOMBARD,
C. B. CHOATE.