US00D593022S

(12) **United States Design Patent**
Forster et al.

(10) **Patent No.: US D593,022 S**
(45) **Date of Patent: ** May 26, 2009**

(54) **WHEEL OR WHEEL COVER**

(75) Inventors: **Kaye Forster**, Bognor Regis (GB); **Peter Theiss**, Stuttgart (DE)

(73) Assignee: **Bayerische Motoren Werke Aktiengesellschaft**, Munich (DE)

(**) Term: **14 Years**

(21) Appl. No.: **29/326,020**

(22) Filed: **Oct. 10, 2008**

(30) **Foreign Application Priority Data**

Apr. 14, 2008 (DE) 40 2008 001 891

(51) **LOC (9) Cl.** **12-16**
(52) **U.S. Cl.** **D12/211**
(58) **Field of Classification Search** D12/204–213; 301/37.101, 64.101, 65, 64.201
See application file for complete search history.

(56) **References Cited**

U.S. PATENT DOCUMENTS

D489,033 S * 4/2004 Lee D12/211
D522,954 S * 6/2006 Hueller D12/211
D532,358 S * 11/2006 Blasi D12/211
D544,427 S * 6/2007 Pfeiffer D12/211
D555,567 S * 11/2007 Schweizer D12/211
D567,167 S * 4/2008 Forster D12/211
D579,846 S * 11/2008 Chung D12/209
D583,742 S * 12/2008 Juergens et al. D12/211
D584,211 S * 1/2009 Farny D12/211

FOREIGN PATENT DOCUMENTS

WO DM/049334 9/1999

* cited by examiner

Primary Examiner—Stacia Cadmus
(74) *Attorney, Agent, or Firm*—Crowell & Moring LLP

(57) **CLAIM**

The ornamental design for a wheel or wheel cover, as shown and described.

DESCRIPTION

FIG. **1** is a front view of a wheel or wheel cover according to our novel design; and,

FIG. **2** is a perspective view thereof.

The broken line showing of the rear portion of the rim and the bolt holes and center cap in the central hub area is included for the purpose of illustrating environment and forms no part of the claimed design.

1 Claim, 1 Drawing Sheet

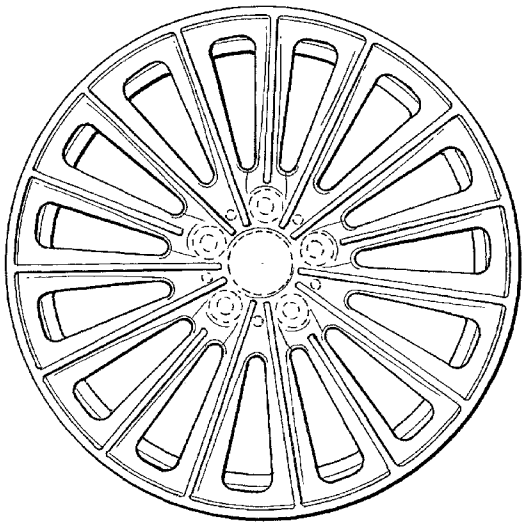

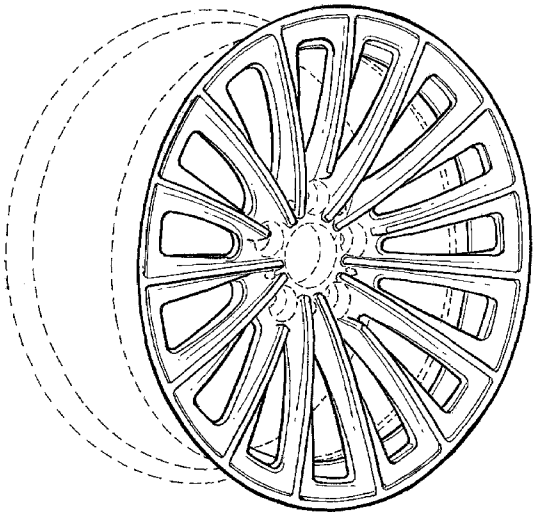

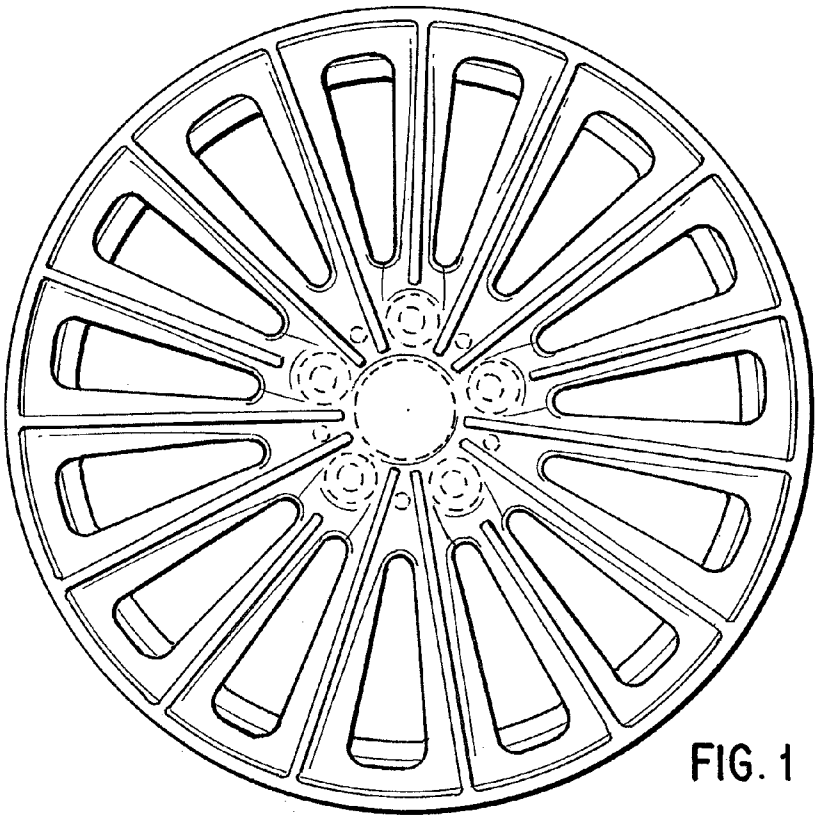

FIG. 1

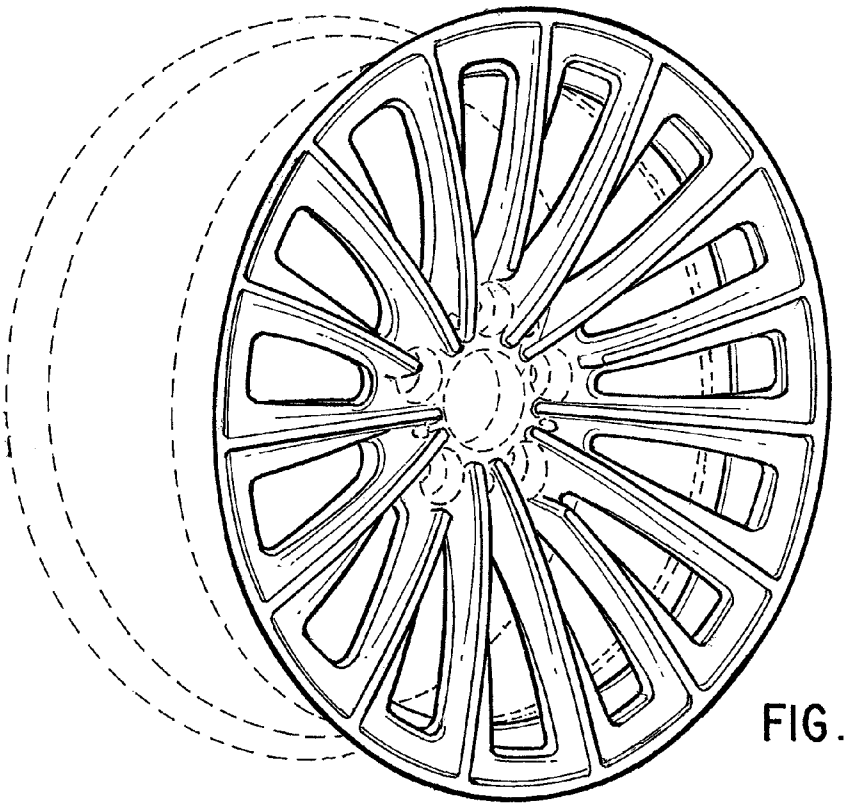

FIG. 2