US 20230417045A1

(19) **United States**

(12) **Patent Application Publication** (10) **Pub. No.: US 2023/0417045 A1**

Argyrou (43) **Pub. Date: Dec. 28, 2023**

(54) **METHOD FOR CONSTRUCTING A CONCRETE FLOOR IN A MULTISTOREY BUILDING**

(71) Applicant: **Hickory Design Pty Ltd**, Melbourne (AU)

(72) Inventor: **George Argyrou**, Elwood (AU)

(21) Appl. No.: **18/465,744**

(22) Filed: **Sep. 12, 2023**

Related U.S. Application Data

(63) Continuation of application No. 16/092,808, filed on Oct. 11, 2018, now Pat. No. 11,802,403, filed as application No. PCT/AU2017/050546 on Jun. 5, 2017.

(30) **Foreign Application Priority Data**

Jun. 23, 2016	(AU)	2016902460
Aug. 1, 2016	(AU)	2016903025
Jan. 27, 2017	(WO)	PCT/AU2017/050063
Jan. 27, 2017	(WO)	PCT/AU2017/050064

Publication Classification

(51) **Int. Cl.**

E04B 1/348	(2006.01)
E04B 5/23	(2006.01)
E04B 5/38	(2006.01)
E04G 21/12	(2006.01)
E04B 5/04	(2006.01)
E04B 5/18	(2006.01)
E04G 11/48	(2006.01)
E04G 11/56	(2006.01)

(52) **U.S. Cl.**

CPC ***E04B 1/34815*** (2013.01); ***E04B 5/23*** (2013.01); ***E04B 5/38*** (2013.01); ***E04G 21/12*** (2013.01); ***E04B 5/04*** (2013.01); *E04B 1/20* (2013.01); ***E04G 11/483*** (2013.01); ***E04G 11/56*** (2013.01); ***E04B 1/34823*** (2013.01); ***E04G 11/48*** (2013.01); ***E04B 5/18*** (2013.01)

(57) **ABSTRACT**

The invention provides a method of forming a concrete floor of a multistorey building, the method including: installing a first building module having a first precast concrete floor slab adjacently spaced from a second building module having a second precast concrete floor slab, at least the first precast concrete floor slab supporting an upstanding support member for supporting an upper floor; forming a channel between the spaced first and second precast concrete floor slabs by providing supporting formwork between the floor slabs for supporting poured concrete; and pouring concrete into the channel to form a concrete connection between the first and second precast slabs, thereby forming a concrete floor of a building.

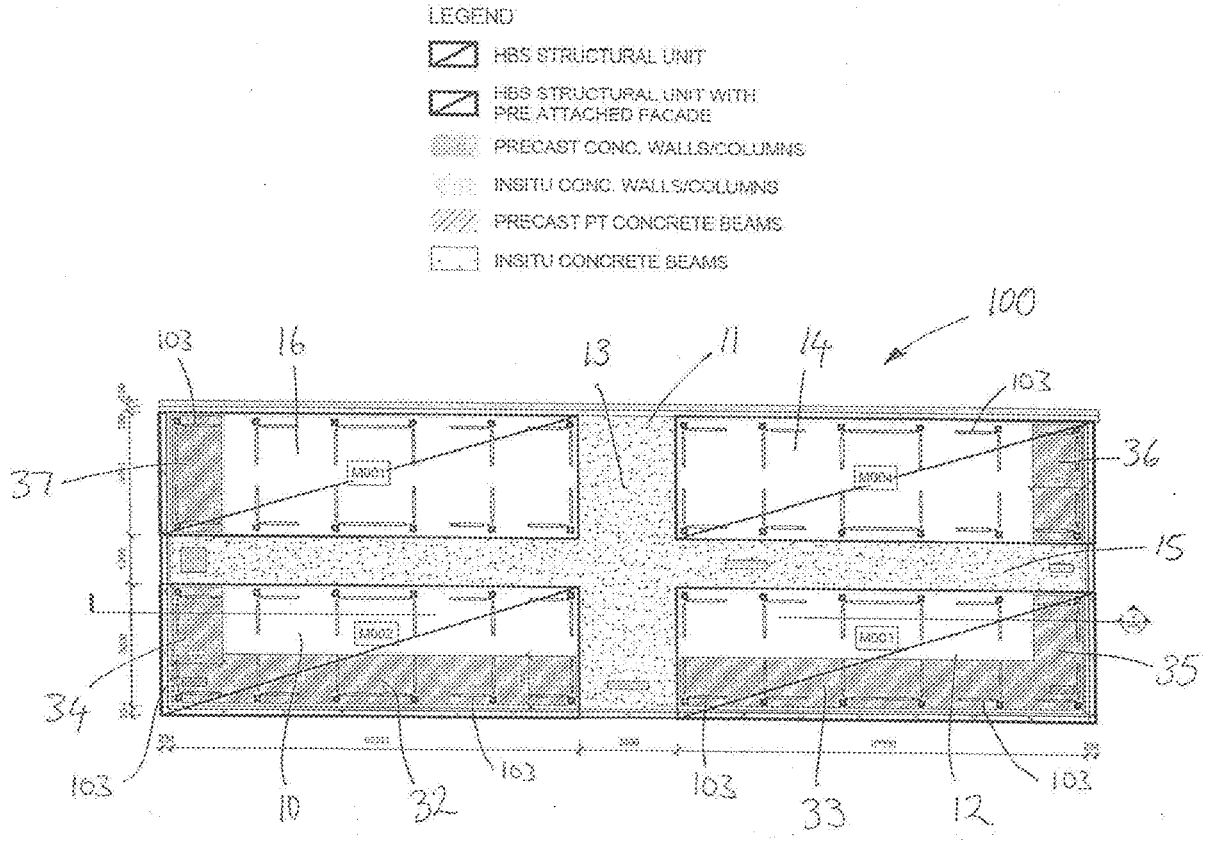

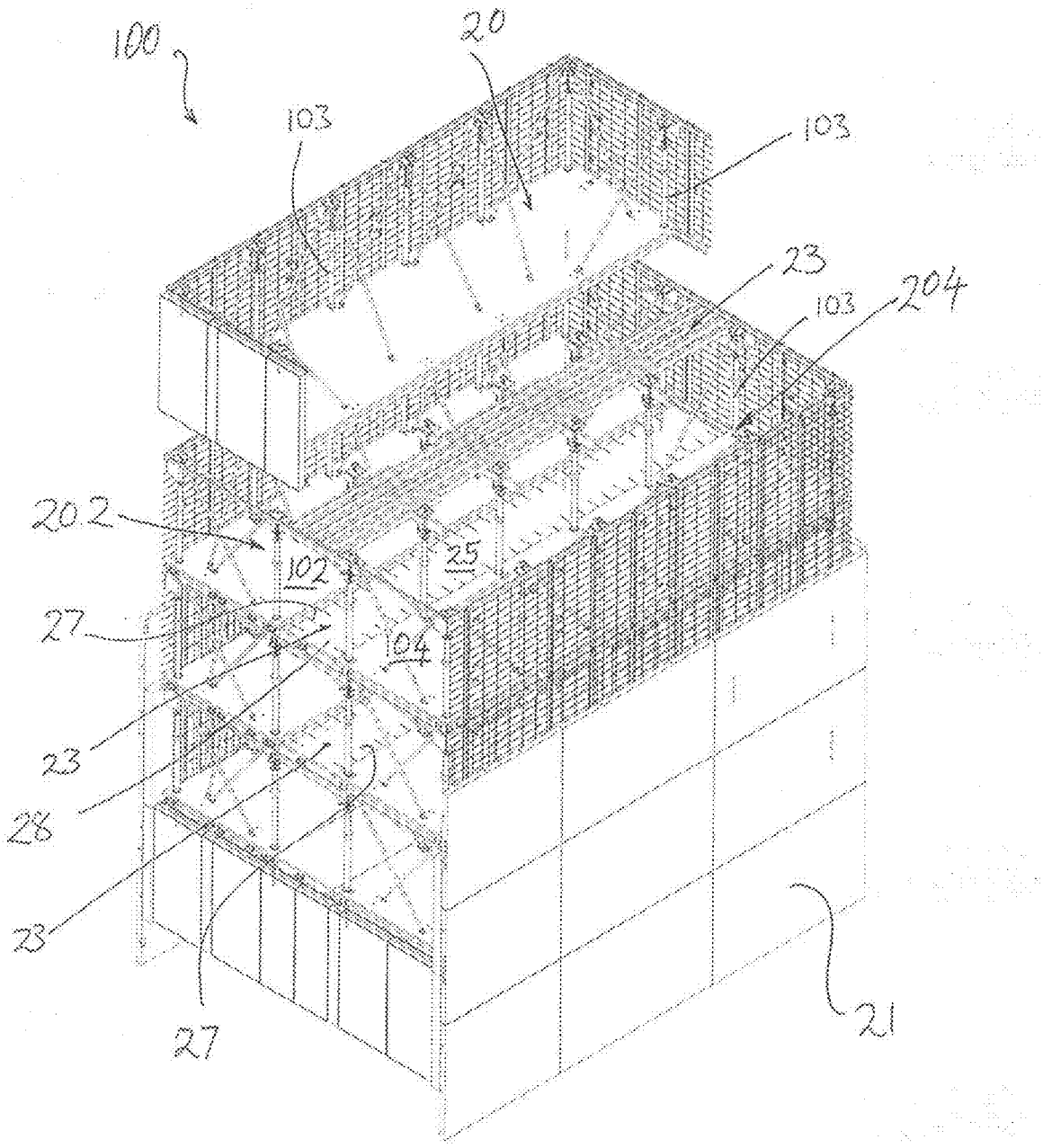

Figure 1

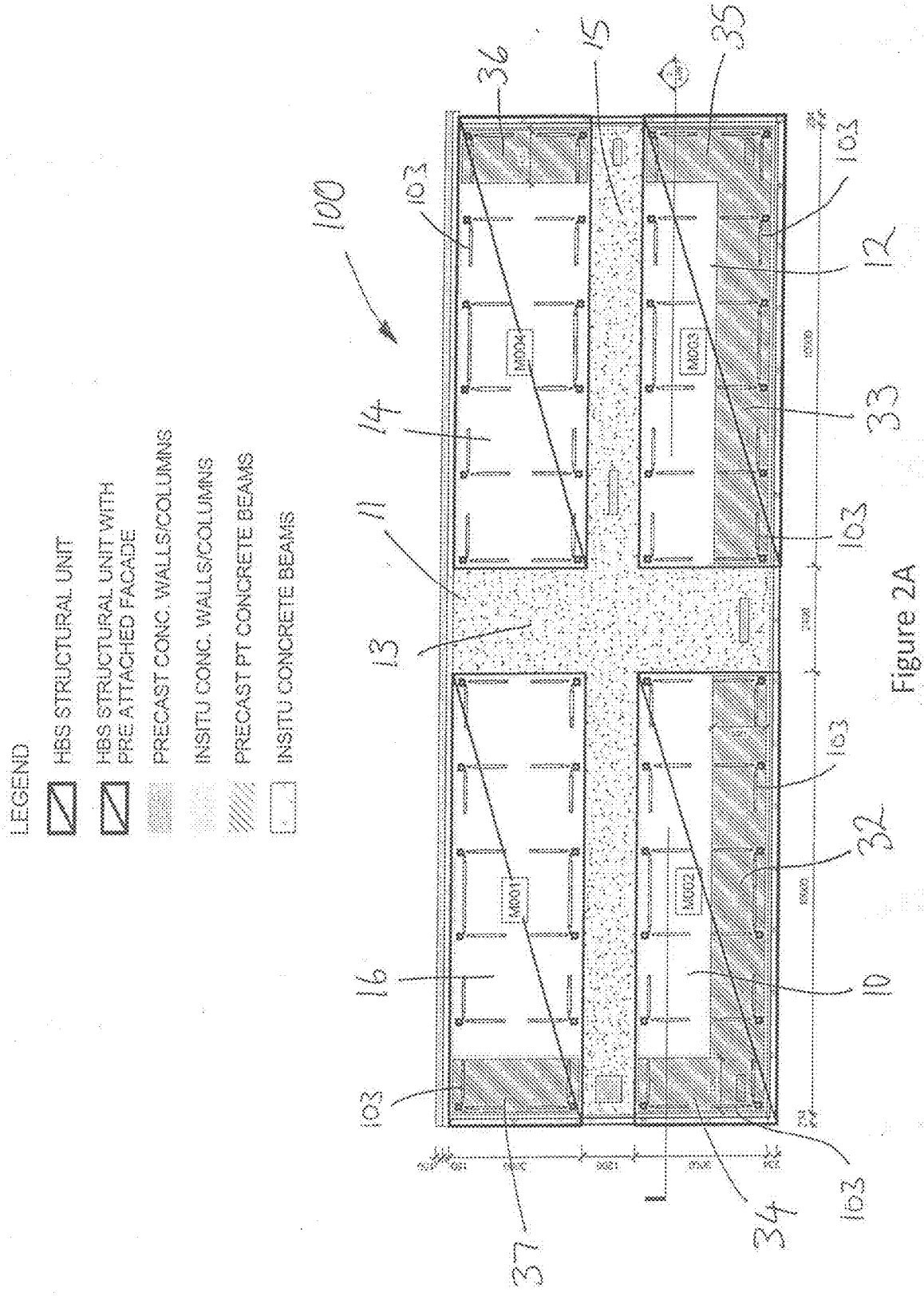
LEGEND
HBS STRUCTURAL UNIT
HBS STRUCTURAL UNIT WITH PRE ATTACHED FACADE
PRECAST CONC. WALLS/COLUMNS
INSITU CONC. WALLS/COLUMNS
PRECAST PT CONCRETE BEAMS
INSITU CONCRETE BEAMS
100
103
36
15
35
12
33
14
11
13
16
10
32
34
37
M001
M002
M003
M004

Figure 2A

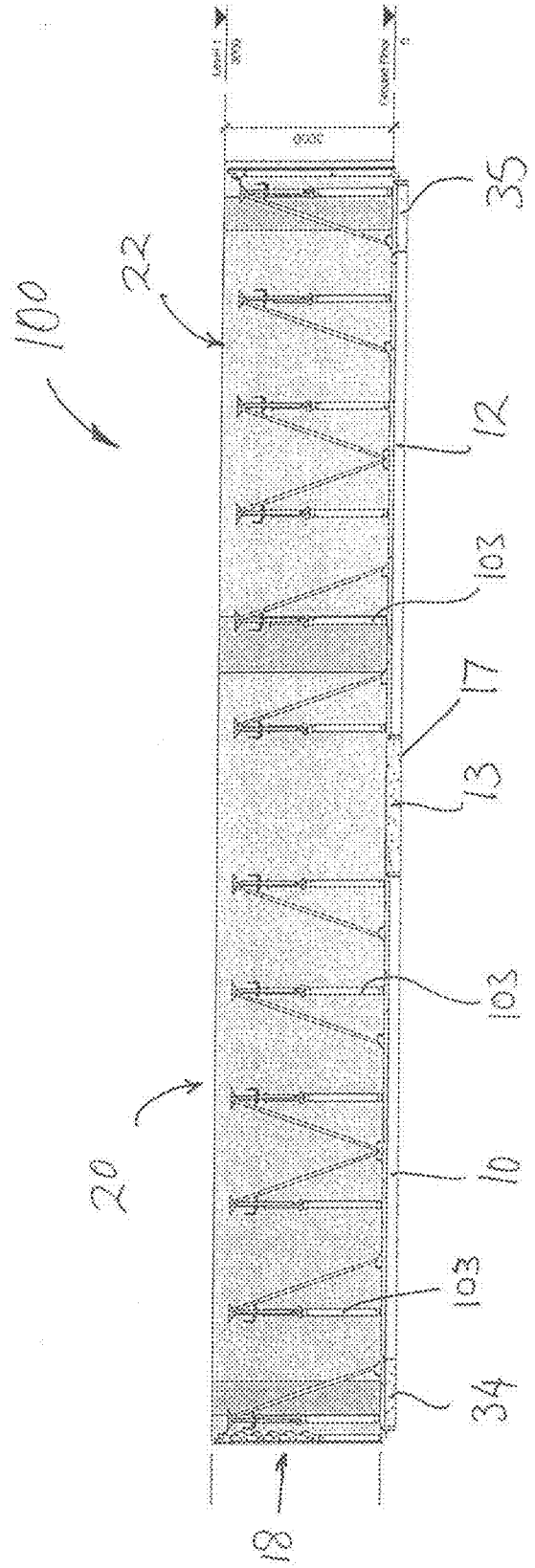

Figure 2B

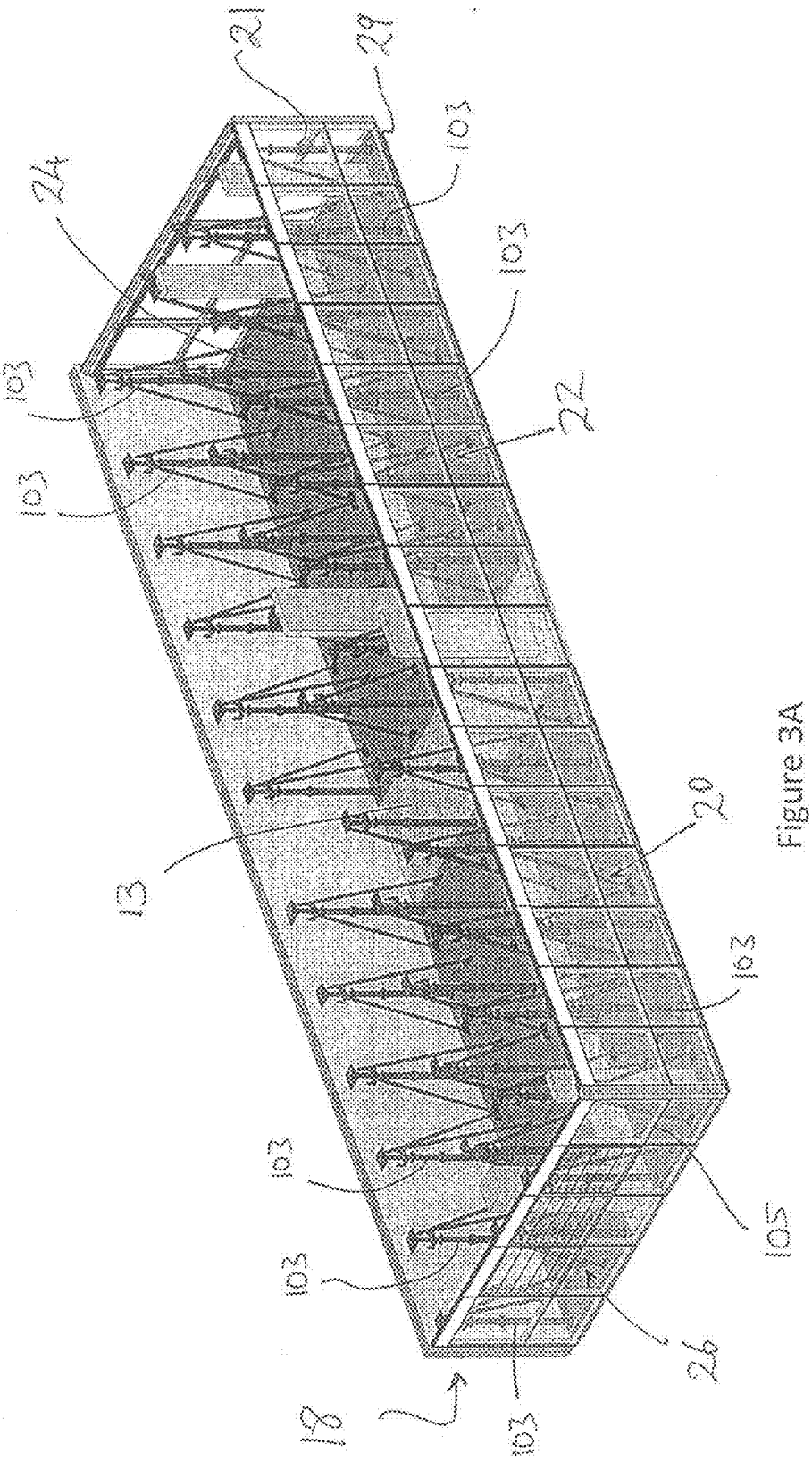

Figure 3A

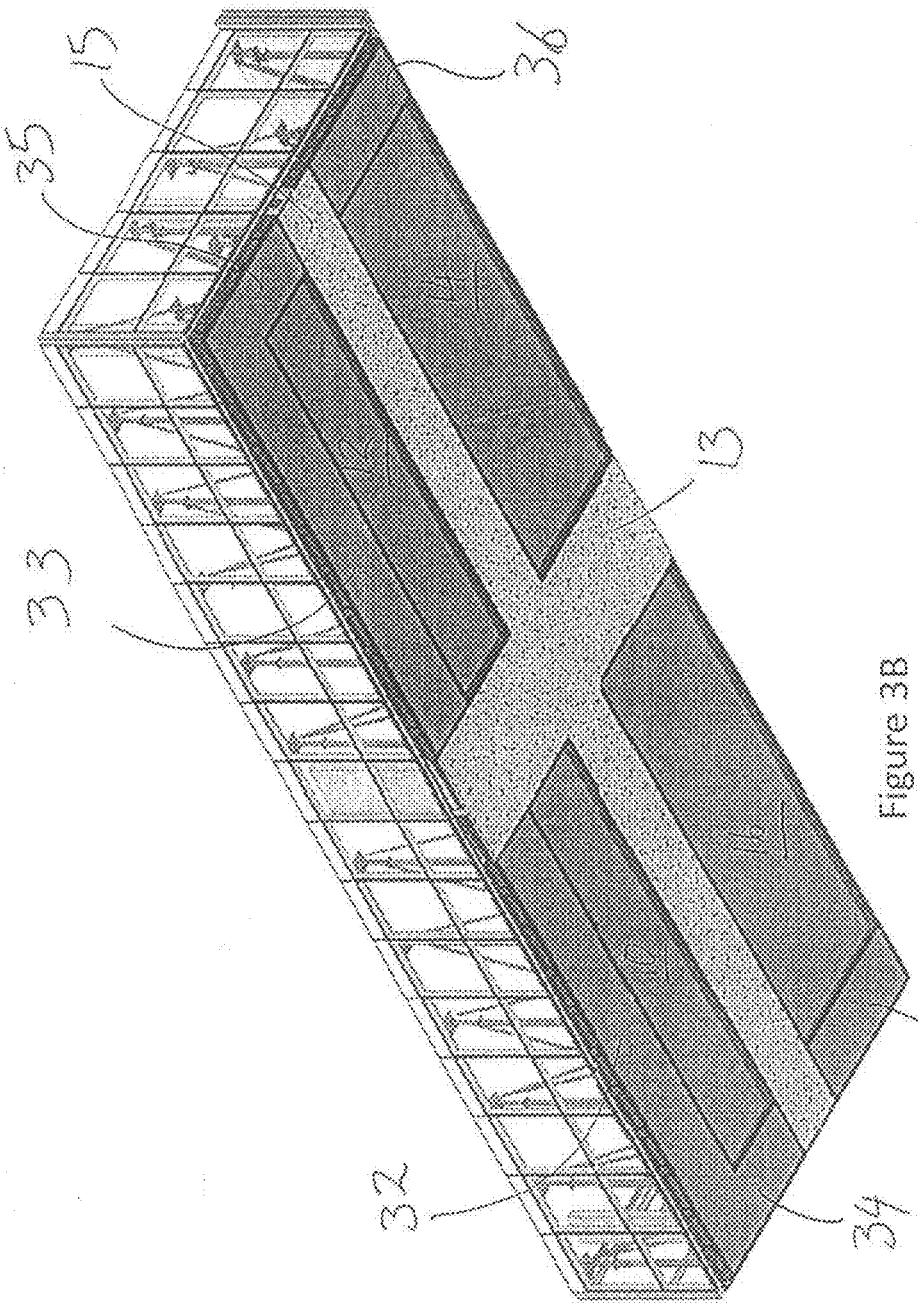

Figure 3B

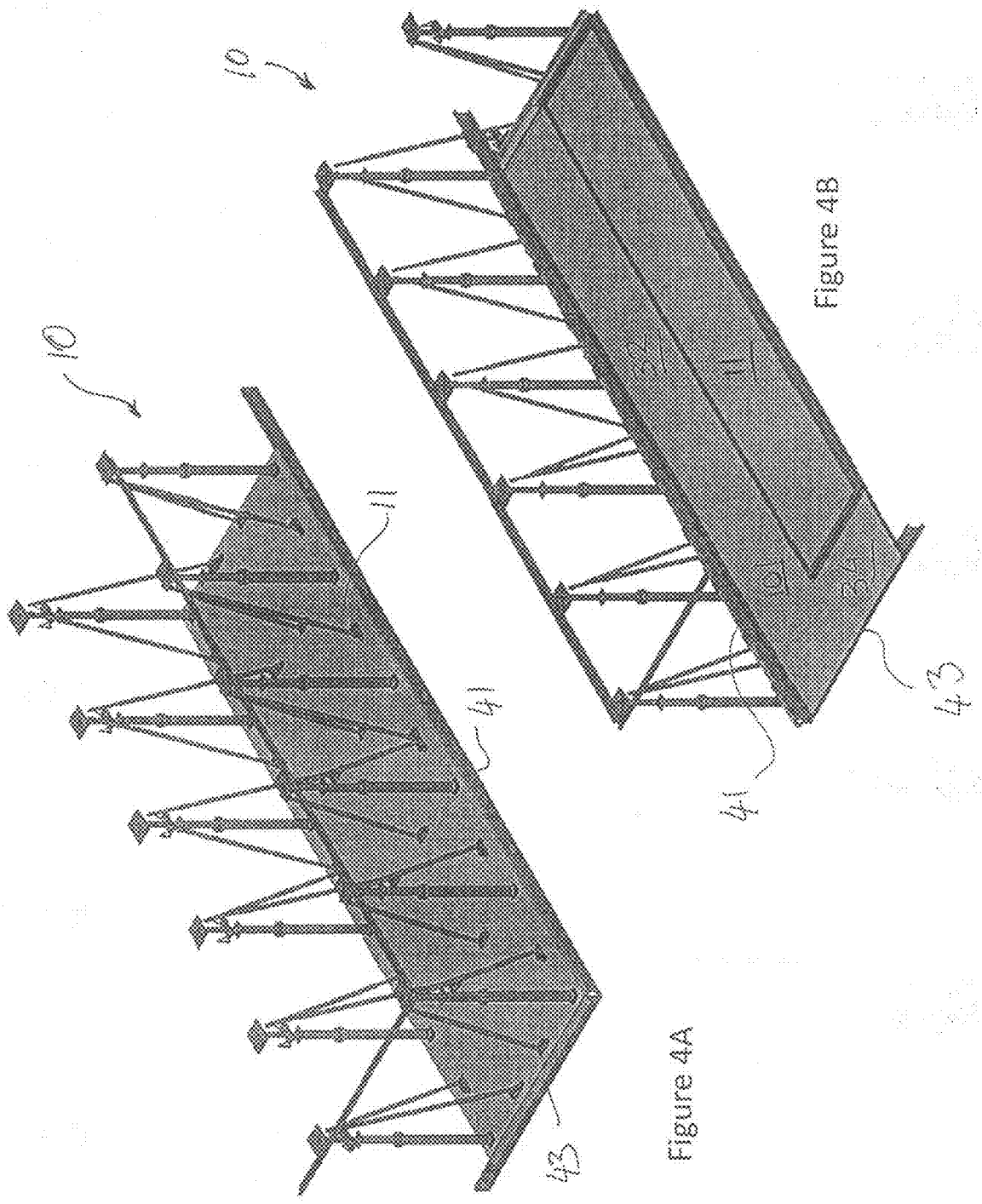

Figure 4A

Figure 4B

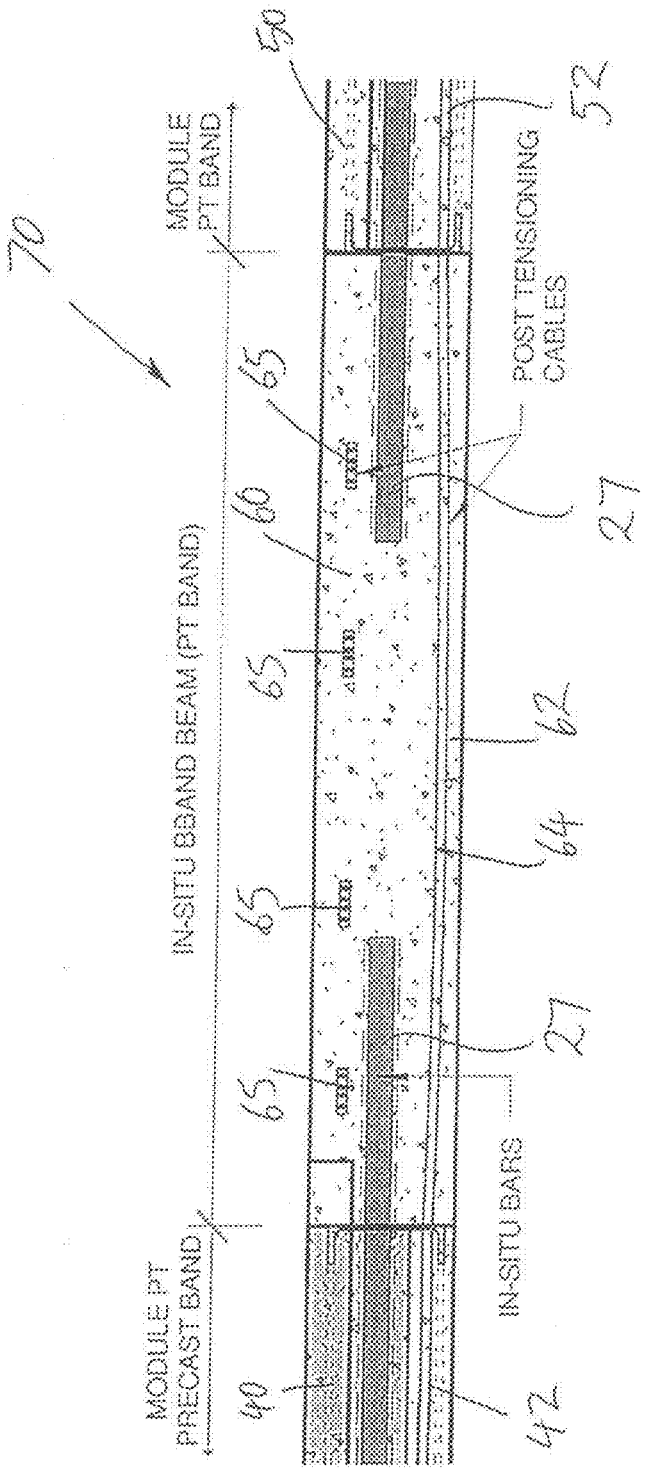
70
MODULE PT BAND
IN-SITU BBAND BEAM (PT BAND)
MODULE PT PRECAST BAND
POST TENSIONING CABLES
IN-SITU BARS
80
52
65
60
65
65
65
27
42
44
27
40
42

Figure 5

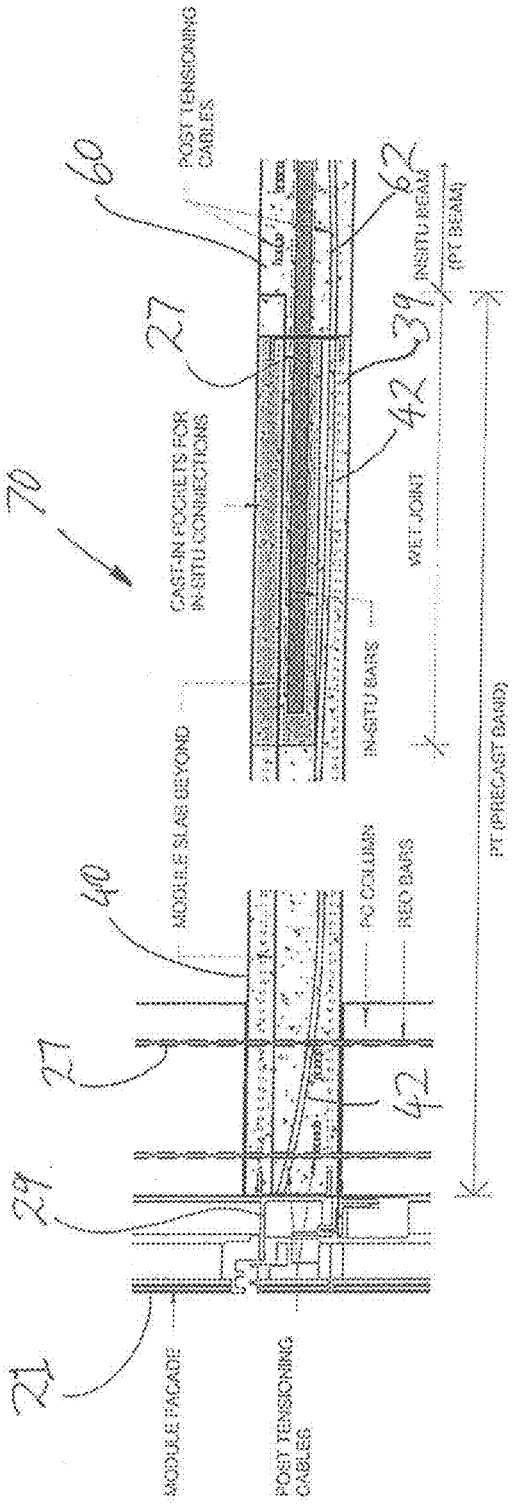
60
POST TENSIONING CABLES
62
INSITU BEAM
(PT BEAM)
27
39
70
42
CAST-IN POCKETS FOR INSITU CONNECTIONS
WET JOINT
INSITU BARS
MODULE SLAB BEYOND
40
PC COLUMN
REO BARS
27
42
PT (PRECAST BAND)
29
21
MODULE FACADE
POST TENSIONING CABLES

Figure 6

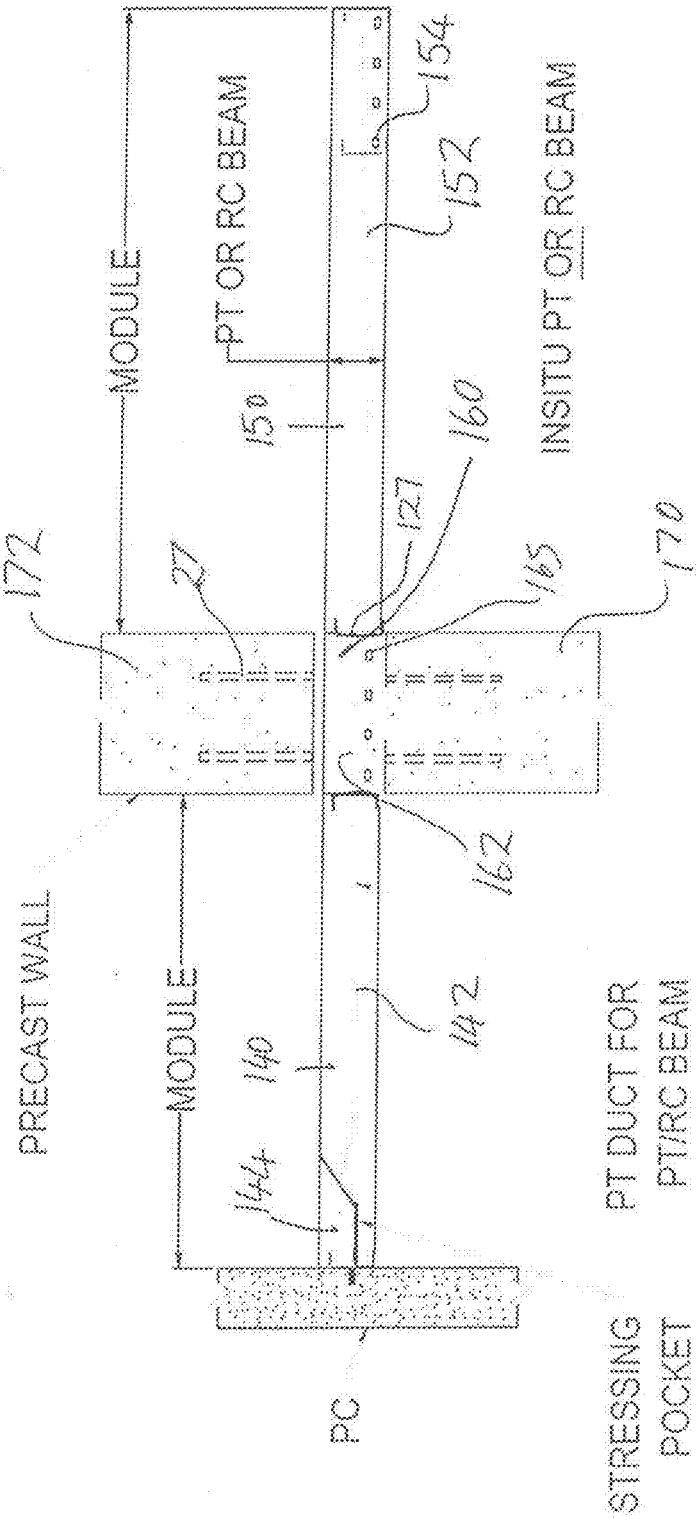
MODULE
PT OR RC BEAM
INSITU PT OR RC BEAM
154
152
150
160
127
165
170
172
27
162
PRECAST WALL
MODULE
140
142
144
PT DUCT FOR
PT/RC BEAM
PC
STRESSING
POCKET

Figure 7

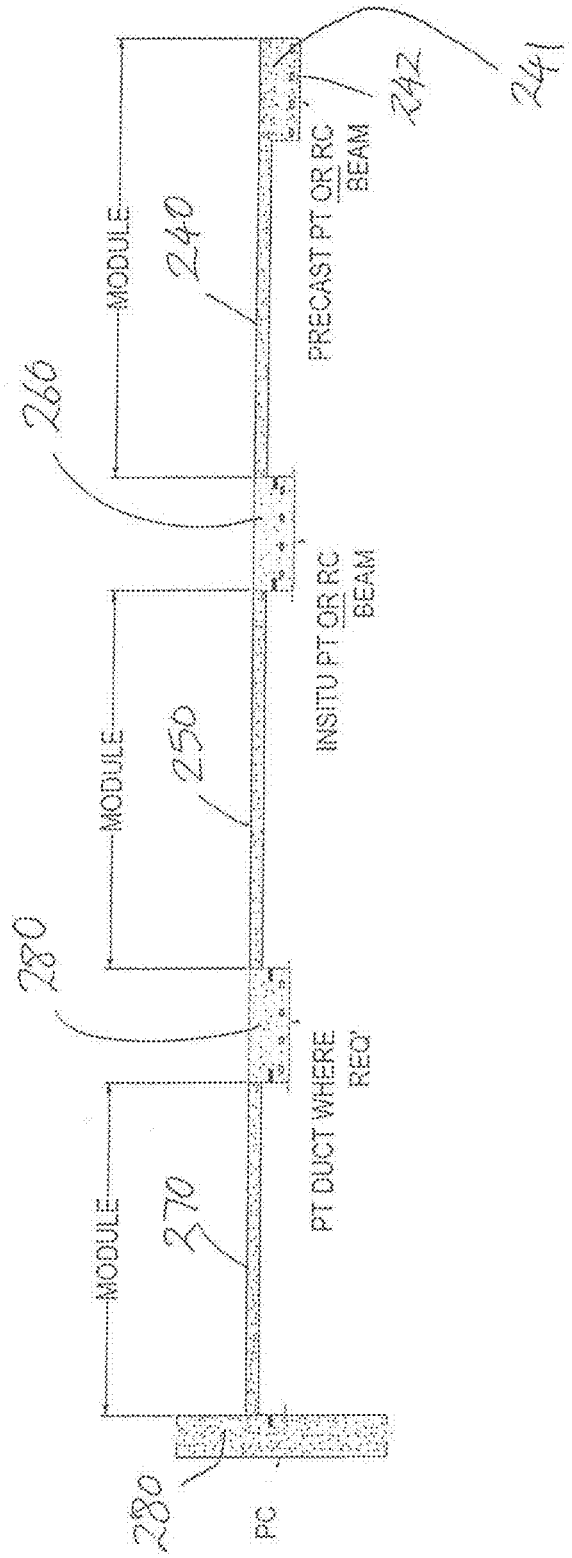
241
242
PRECAST PT OR RC BEAM
240
MODULE
266
INSITU PT OR RC BEAM
250
MODULE
280
PT DUCT WHERE REQ
270
MODULE
280
PC

Figure 8

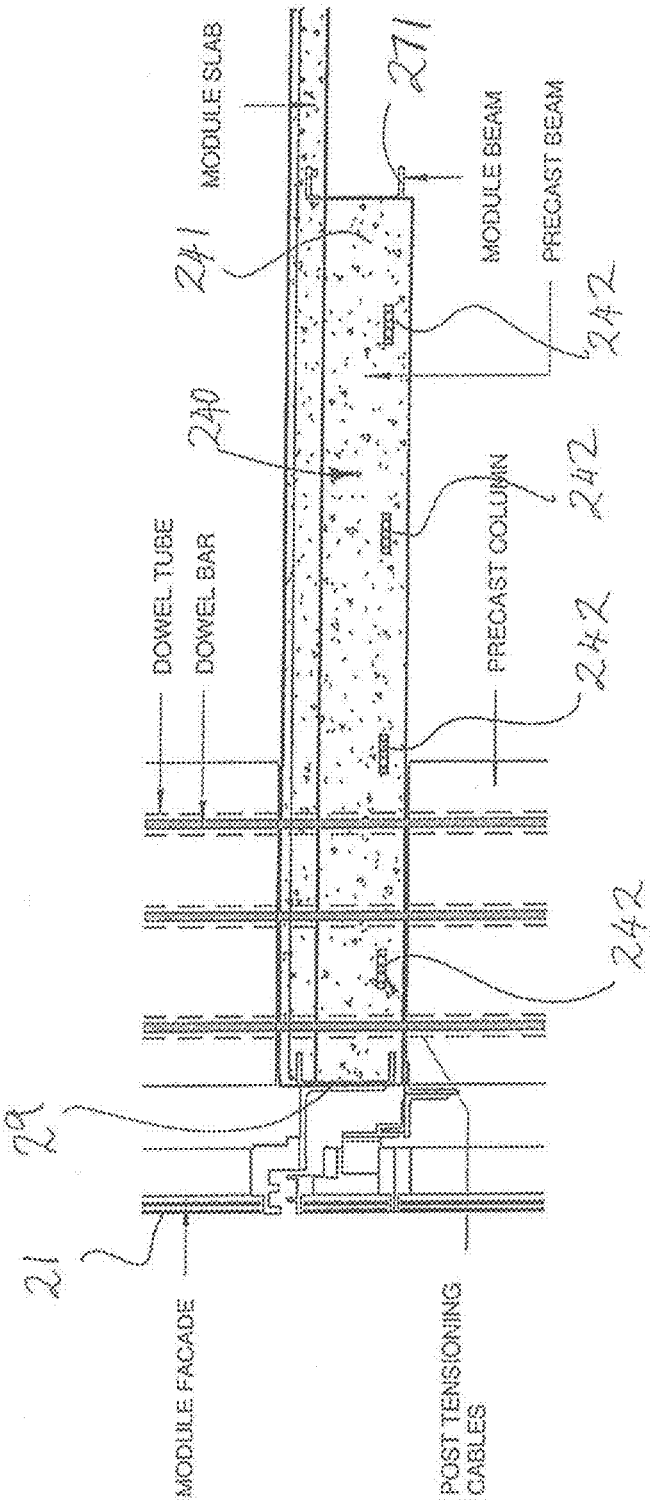
MODULE SLAB
271
241
MODULE BEAM
PRECAST BEAM
242
240
242
DOWEL TUBE
DOWEL BAR
PRECAST COLUMN
242
242
22
21
MODULE FACADE
POST TENSIONING CABLES

Figure 9

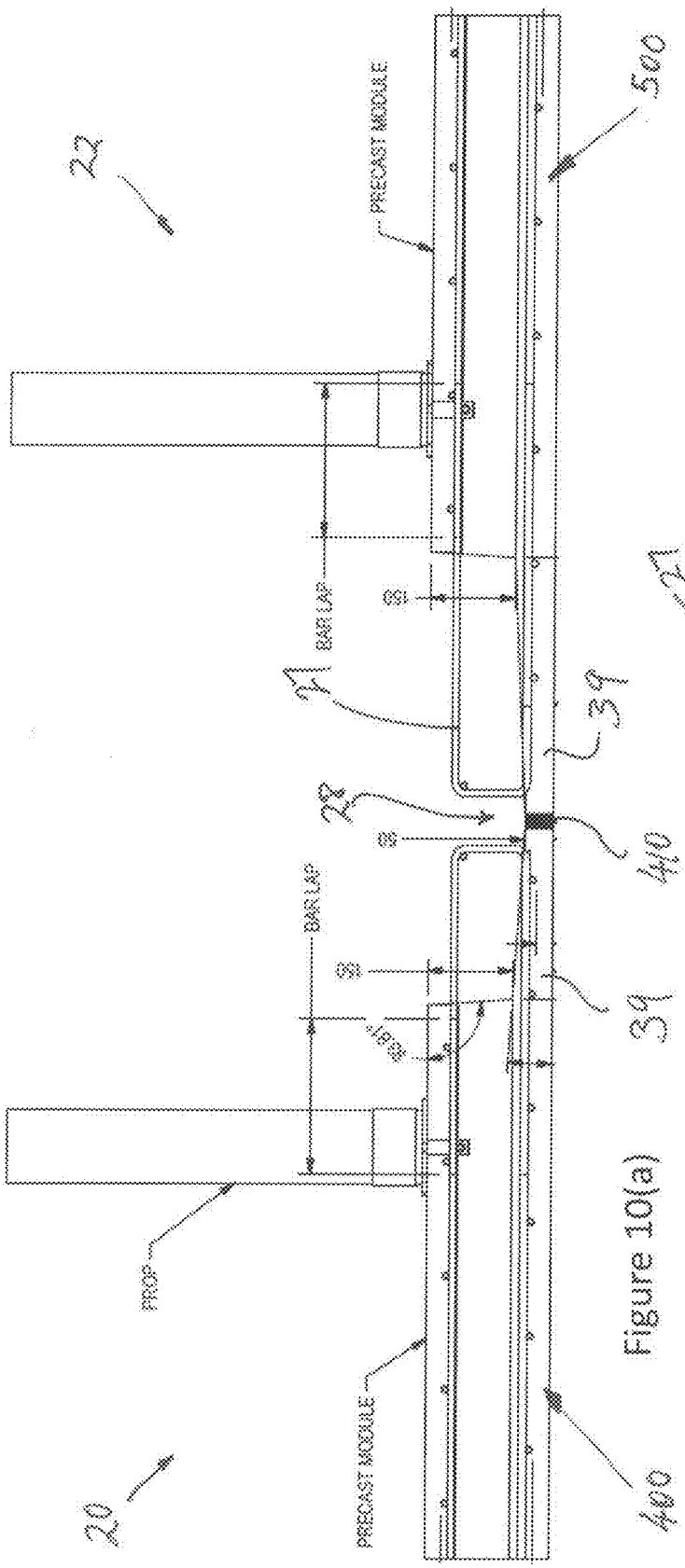

Figure 10(a)

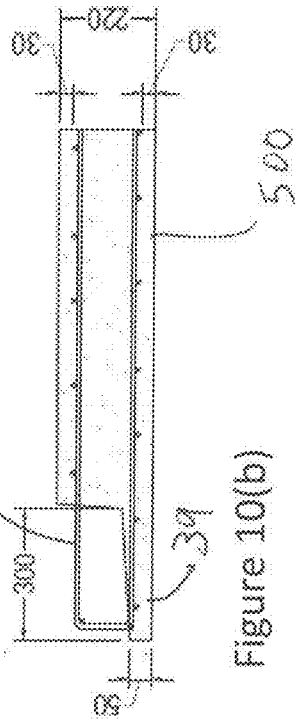

Figure 10(b)

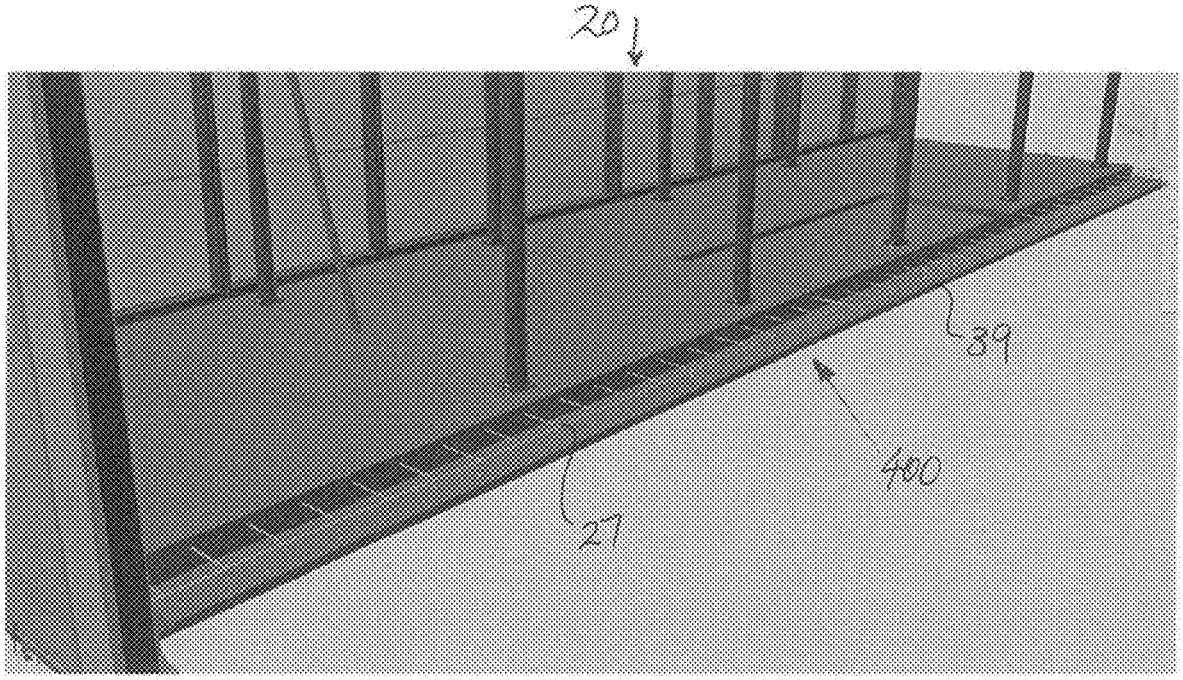

Figure 11(a)

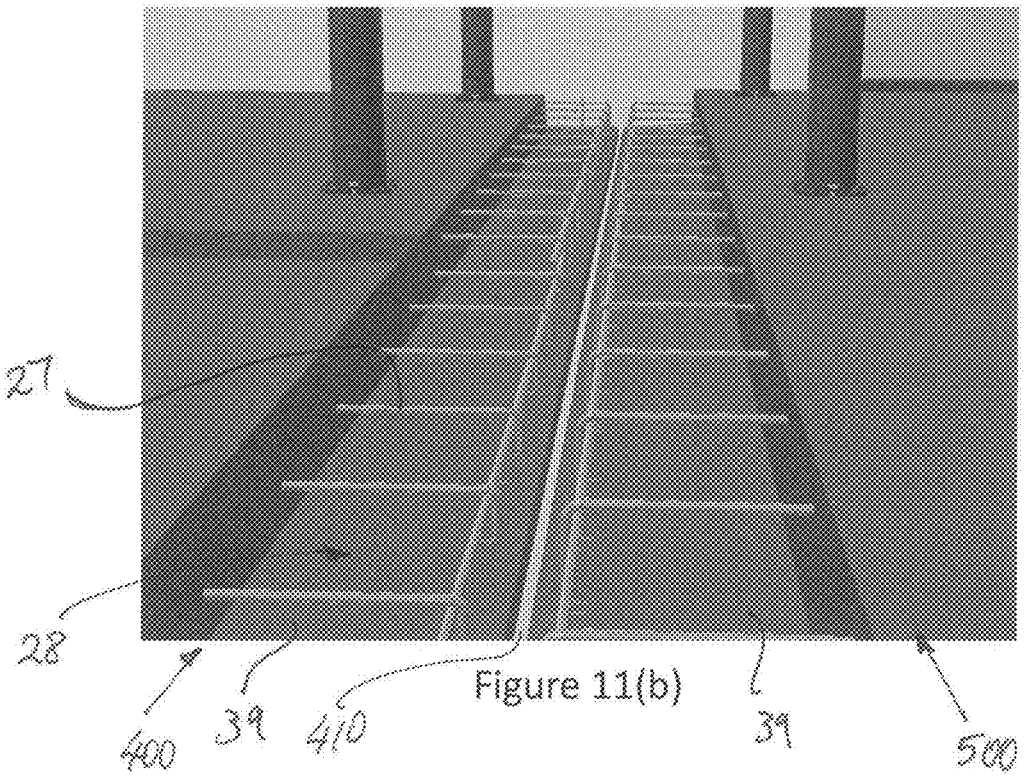

Figure 11(b)

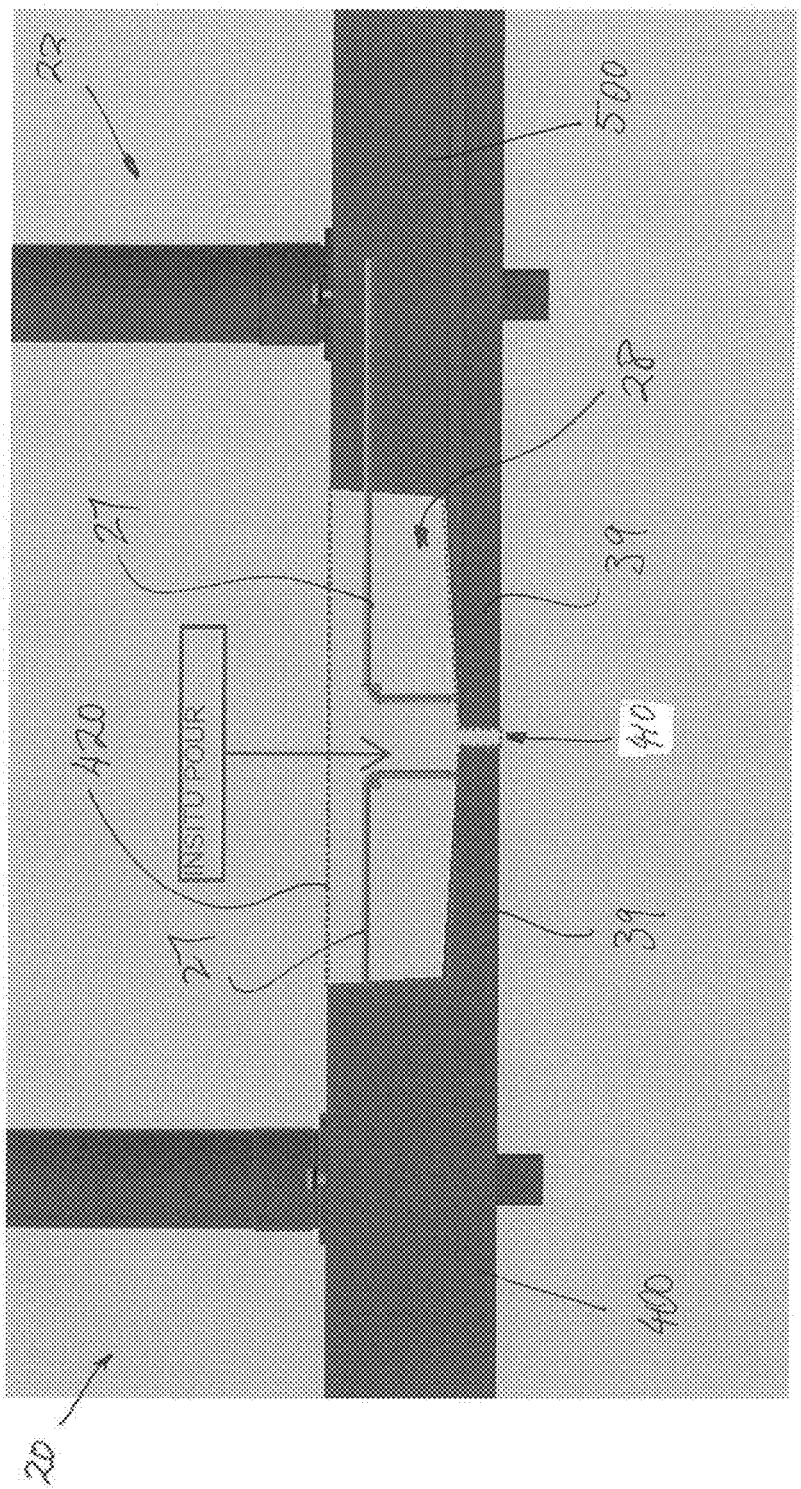

Figure 12

METHOD FOR CONSTRUCTING A CONCRETE FLOOR IN A MULTISTOREY BUILDING

CROSS-REFERENCE TO RELATED APPLICATIONS

[0001] This application is a continuation of U.S. patent application Ser. No. 16/092,808, filed Oct. 11, 2018, which is a U.S. National Stage Application of International Application No. PCT/AU2017/050546, filed on Jun. 5, 2017, which claims the benefit of Australian Patent Application No. 2016902460, filed on Jun. 23, 2016, and which claims the benefit of Australian Patent Application No. 2016903025, filed on Aug. 1, 2016, and which claims the benefit of International Application No. PCT/AU2017/050063, filed Jan. 27, 2017, and which claims the benefit of International Application No. PCT/AU2017/050064, filed Jan. 27, 2017, the entire disclosures of which are incorporated herein by reference for all purposes.

FIELD OF THE INVENTION

[0002] The invention relates to methods for constructing a concrete floor in multistorey buildings.

BACKGROUND OF THE INVENTION

[0003] In the construction industry modular buildings are becoming more popular as they can be largely constructed offsite and assembled on site into a finished product in shorter timeframes than traditional multi-storey buildings. Modular construction involves building and preparing building modules offsite in a factory setting before transporting and installing the module at an installation location. Despite the time saving benefits of modular construction techniques there is a constant pursuit to improve these methods of construction with the aim of achieving time savings and cost savings in the overall construction of the building.

[0004] It is in light of these pursuits for efficiencies in current the construction of modular buildings that the invention was conceived.

SUMMARY OF THE INVENTION

[0005] The invention provides a method of forming a concrete floor of a multistorey building, the method including: installing a first building module having a first precast concrete floor slab adjacently spaced from a second building module having a second precast concrete floor slab, at least the first precast concrete floor slab supporting an upstanding support member for supporting an upper floor; forming a channel between the spaced first and second precast concrete floor slabs by providing supporting formwork between the floor slabs for supporting poured concrete; and pouring concrete into the channel to form a concrete connection between the first and second precast slabs, thereby forming a concrete floor of a building.

[0006] An advantage of providing a method that uses concrete to connect adjacently spaced precast floor slabs, such as floor slabs in a building module, is that the step of pouring of concrete to connect the slabs can be decoupled from the construction and assembly of the building, particularly where the building is constructed with modular building units. Furthermore, the amount of formwork used with the present method of using hybrid wet and precast components is reduced compared to traditional multilevel building methods, when that formwork is provided as a separate structure to the precast floor slabs.

[0007] In one embodiment the method includes installing a third building module with a third precast concrete floor slab above the first precast concrete floor slab and supporting the third precast concrete floor slab on the upstanding support member. The method may include using a temporary support member or a permanent support member as the upstanding support member. The method may include using an upstanding support member in the form of a wall structure. The method may include installing the third precast concrete floor slab before the concrete is poured into the channel to form the concrete connection between the first and second precast slabs.

[0008] In another embodiment the method includes erecting formwork and pouring concrete to form a concrete beam connecting the floor slabs, thereby forming a floor of a building having a cast concrete beam. The method can include installing multiple precast floor slabs and casting beams extending between the slabs in different directions, such as perpendicular cast beams.

[0009] In another embodiment the method includes precasting the first precast concrete floor slab to have a first portion and a second portion, a thickness of the second portion being greater than a thickness of the first portion. The second portion may be precast to create an integrally formed concrete beam. The integrally formed concrete beam may span a length or width of the concrete slab. The method may include pouring the concrete to a thickness greater than the thickness the first portion of the first concrete floor slab. The method may further include pouring the concrete to a thickness substantially equal to the thickness of the second portion of the first concrete floor slab.

[0010] In another embodiment the method includes pouring the concrete to be level with a top surface of the first and second precast concrete floor slabs. The method may include precasting the first concrete floor slab to include a steel beam at least partially embedded into the first precast concrete floor slab.

[0011] The method preferably includes installing the slabs in elevation to define an upper storey floor. In a preferred embodiment the first and second precast floor slabs are each formed as part of a building modular, where building modules can be assembled one above the other with floor slabs suspended in elevation one adjacent the other.

[0012] The method may also include vertically inserting a pre-fabricated concrete wall panel in between the adjacently spaced precast floor slabs, erecting formwork between the precast floor slabs and pouring concrete into the formwork to tie the vertical wall panel to the floor slabs. Installing precast slabs vertically to form a wall between floor slabs, particularly elevated floor slabs, and then tying the wall slab to the floor slabs by way of the wet joint defined by the in situ poured concrete, provides an efficient means of installing structural support in a building.

[0013] The method also preferably includes post tensioning the precast floor slabs by, before pouring concrete into the channel, installing a conduit between bores extending through the first precast floor slab and the second precast floor slab to form a tensioning passage that extends through both the first and second precast floor slabs;

[0014] pouring concrete into the channel between the first and second precast concrete slabs to connect the first and second precast slabs, thereby forming a slab of a building; and

[0015] feeding a tensioning cable, such as a tendon, through the tensioning passage and tensioning the tensioning cable.

[0016] Post tensioning of the formed connection, or 'wet joint' once it has dried, and the floor slabs increases the strength of the resulting concrete floor structure by compressing the concrete slabs. It is possible to tension the full span of a slab made from multiple precast concrete floor slabs. Alternatively, the concrete floor can be reinforced using reinforcement bars embedded into the poured and/or precast concrete.

[0017] The method could also include precasting any of the precast concrete floor slabs to include an integrally formed beam. For example, the first precast floor slab could have an integrally cast beam.

[0018] By providing a method that uses a combination of poured and precast beams it is possible to reduce the number of slab to beam connections, which can be complex and time consuming. In addition, by providing a precast concrete slab with integrally formed structural precast beams the remaining areas of the precast slab can be thinner than a slab with a constant thickness. In other words, by strengthening targeted areas of the precast concrete slab it is possible to reduce the overall weight of the slab for a given floor space. By reducing the weight for a given floor space the size of the precast concrete slab, or the building module that the precast concrete slab forms, can be increased while maintaining the same weight. This is beneficial as weight is a limiting factor dictating the size of building modules (the building modules need to be transported and lifted into position).

[0019] The second precast concrete slab may also have an integrally formed beam. The integrally formed beam of the second precast concrete slab may be co-axial with the integrally formed beam of the first precast concrete slab, when the second precast concrete slab is adjacent to the first precast concrete slab. Once the poured concrete beam has set the precast beam in the first precast concrete slab and the precast beam in the second precast concrete slab may form a single continuous beam.

[0020] The first precast concrete slab may have a second precast beam. The second precast beam in the first precast concrete slab may be perpendicular to the first beam in the first precast concrete slab.

[0021] The first precast concrete slab may have a reinforcing bar or angle that extends from the first precast concrete slab to anchor the first precast concrete slab to the poured concrete beam.

[0022] The first precast concrete slab may form the base of a building module. The first precast concrete slab, or the building module, may be made in a first location and transported to a second location for installation.

[0023] The first precast concrete slab may form the base of a building module. The first precast concrete slab, or the building module, may be made in a first location and transported to a second location for installation.

[0024] The invention also provides a method of forming a concrete floor of a multistorey building, the method including: installing a first building module having a first precast concrete floor slab adjacently spaced from a second building module having a second precast concrete floor slab, the first precast concrete slab having a first aperture extending through the first pre-cast concrete slab and the second concrete slab having a second aperture extending through the second pre-cast concrete slab; installing a conduit between the first aperture and the second aperture to form a tensioning passage that extends through both the first and second pre-cast concrete slabs; forming a channel between the spaced first and second precast floor slabs by providing supporting formwork between the floor slabs for supporting poured concrete; and pouring concrete into the channel to form a concrete connection between the first and second precast slabs, thereby forming a concrete floor of a building.

[0025] The method may include feeding a tensioning cable through the tensioning passage and tensioning the tensioning cable to post-tension the concrete floor.

BRIEF DESCRIPTION OF THE DRAWINGS

[0026] An embodiment, incorporating all aspects of the invention, will now be described by way of example only with reference to the accompanying drawings in which;

[0027] FIG. **1** is an isometric view of multi-storey building in which a concrete floor is being constructed in accordance with an embodiment of the present invention;

[0028] FIG. **2**A is a plan view of a concrete floor of a building made in accordance with an embodiment of the present invention;

[0029] FIG. **2**B is a cross-sectional view of the concrete floor in FIG. **2**A, taken at the line A-A;

[0030] FIG. **3**A is a top isometric view of the concrete floor in FIG. **2**A;

[0031] FIG. **3**B is a bottom isometric view of the concrete floor in FIG. **3**A;

[0032] FIG. **4**A is a top isometric view of a precast concrete floor slab having an integrally formed beam;

[0033] FIG. **4**B is a bottom isometric view of the precast concrete floor slab in FIG. **4**A;

[0034] FIG. **5** is a cross-sectional view of a first precast slab and a second precast slab joined together by an in situ concrete connection;

[0035] FIG. **6** is a zoomed out view of the view in FIG. **5** illustrating the first precast slab with the in situ concrete connection on one side and a façade building edge on the other;

[0036] FIG. **7** is a cross-sectional schematic view of an alternative first precast slab and second precast slab joined together by an in situ concrete connection in line with a precast wall;

[0037] FIG. **8** is a cross-sectional schematic view of three precast slabs connected together side-by-side by two in situ concrete connections therebetween;

[0038] FIG. **9** is an enlarged side view of a precast concrete slab similar to FIG. **8** with a precast beam and attached to a façade side of a building with the precast slab positioned between precast columns;

[0039] FIG. **10**(*a*) is an enlarged view of another embodiment of the invention;

[0040] FIG. **10**(*b*) is a side view showing one of the concrete floor illustrated in FIG. **10**(*a*);

[0041] FIG. **11**(*a*) is a perspective view of a building module having a concrete floor as illustrated in FIGS. **10**(*a*) and **10**(*b*);

[0042] FIG. **11**(*b*) is a perspective view of adjacently positioned building modules of the type illustrated in FIG. **11**(*a*); and

[0043] FIG. **12** is a side view similar to FIG. **10**(*a*) illustrating diagrammatically the channel into which concrete is to be poured.

DETAILED DESCRIPTION OF AN EMBODIMENT OF THE INVENTION

[0044] FIGS. **1** to **9** illustrate methods of constructing a concrete floor in multilevel buildings with specific reference, by example, to multilevel buildings built with modular building units, or building modules.

[0045] FIG. **1** illustrates a modular building **100**, which is typically a multistorey building, made of building modules formed off site. FIG. **1** illustrates a building module **20** being lowered onto the top level of the multi-storey building **100** formed from assembled modules and partly clad with a façade **21**. The transportation of each module from a first location off site to the installation site and the subsequent construction requires the modules to maintain a certain stability so that they can be handled by cranes and other handling equipment on and off the transportation vehicle, and placed or stacked on site so that they can support other modules placed on top.

[0046] The figures illustrate building units, or modules **20**, **22**, **24**, **26**, including respectively floor slabs **10**, **12**, **14**, **16**. Specifically, the floor slabs from adjacently spaced modules, are shown as 'stitched' together, in other words joined together by in situ wet joint connections of concrete. In the embodiment described, the connections are formed to create in situ beams for reinforcing a finished floor structure. The in situ formed joins, preferably in the form of beams, are structural joins that contribute to the structural stability of the building and therefore reduce the amount of vertical support required in the vicinity of the beams.

[0047] The floor slabs can be arranged in any orientation. In the embodiment illustrated the floor slabs, or building modules, are arranged side by side in two directions across a building storey (i.e. installing floor slabs a single horizontal plane). This means that the concrete is applied, by pouring or even by spraying, to create poured beams extending in multiple directions, such as in perpendicular directions as illustrated in the drawings. Installing the next level of the modular building **100** requires installing floor slabs above the already installed precast concrete floor slabs (i.e. installing vertically).

[0048] An advantage with the presently described system and method of forming a concrete floor of a multistorey building, and indeed the system and method of forming a multistorey building itself, is that the erection of the framework in the building, namely in the form of building units (modules), is decoupled from the process of joining the building units together.

[0049] In known building systems the floor of one storey needs to be completed, or joined together, by concreting to a substantially finished state before the walls can be erected on that floor. Furthermore, the walls need to be erected before the floor of the next storey up can be erected and supported by the walls.

[0050] In the present system and method, the framework including floor slabs and upright supports of multiple storeys can be erected in advance of the floors below being stitched together with concrete. This decoupling of erecting multiple storeys from concreting a floor increases building efficiencies and decreases building time because it is not necessary to wait for a freshly poured concrete floor to dry before the next level up can be built.

[0051] The in situ poured beams can either be tensioned by post tensioning techniques or reinforced with reinforcing steel. Accordingly, the resulting structure includes a concrete floor strengthened by 2-way tensioned or reinforced beams.

[0052] FIGS. **2**A to **3**B illustrate in plan view four floor slabs, shown as precast concrete floor slabs **10**, **12**, **14**, **16**, on a single level **18** of a multistorey building, shown as modular building **100**. Each of the precast concrete slabs **10**, **12**, **14**, **16** forms the base of the building modules **20**, **22**, **24**, **26** respectively for the modular building. The precast concrete slabs **10**, **12**, **14**, **16** are connected together by poured concrete **11** to form a completed floor slab **17**. The term 'poured' is used herein but it is understood that the concrete could also be sprayed, or applied by other wet concrete techniques, to form a beam connection between individual floor slabs.

[0053] The precast concrete floor slabs **10**, **12**, **14**, **16** each have at least one upstanding support member attached to them, where that upstanding support member is a permanent or temporary support with which, or on which, a further storey (usually another building module with a concrete slab) can be installed above the lower concrete floor slab to thereby construct a multi-storey building.

[0054] For example, referring to FIG. **4**A, precast concrete floor slab **10** has multiple upstanding support members, shown as temporary support members **103**. The temporary support members **103** can be used to support a concrete floor above (not shown) while a wall, column or façade of floor slab **10** is erected, and can also be used to assist with support in erecting permanent vertical supports. The temporary supports are then removed as permanent vertical support is provided by the installed wall, column or façade.

[0055] The precast concrete floor slabs may be described as being provided with a wall structure. It is envisaged that the wall structure could be an internal wall, a façade wall, or a structure to allow creation of a wall (such as shutters for pouring or spraying concrete walls). As shown in FIG. **3**A, the precast concrete floor slab **10** of module **20** has façade panels, shown as windows **105**. In this embodiment the facade panels **105** are connected to their respective floor slabs through brackets **29** and fixing joints that are embedded into the side edges of the floor slabs during the precasting process. The side section views of FIGS. **6** and **9** also illustrate the facade **21** attached to the side of the precast concrete floor slabs **40**, **240**. In constructing a multistorey building in accordance with this embodiment, the entire module of floor slab and facade, with temporary upright supports, is craned and located in position above a storey with floor slabs below.

[0056] As an alternative to using temporary vertical/upright supports the wall structure itself on the precast concrete floor slab may form the upstanding support member providing the vertical support required to support a concrete floor slab of a storey above, or indeed to support multiple storeys above. Further still, a combination of temporary and permanent upstanding supports could be incorporated onto the concrete wall slab, as described with the facade embodiment above.

[0057] Referring to FIG. **1** by way of explanation, the temporary support members **103** act to vertically space the precast concrete floor of one level of the modular building

100 from another level of the modular building during construction. In this way the upper concrete floor slab is held in the correct position by the temporary support members **103** until the permanent support members are installed on site. Thereafter the temporary support members **103** may be removed and reused for the other building modules. It is envisaged that the aforementioned wall structures can be the permanent support members, once they are installed and attached to the upper concrete floor slab.

[0058] In the embodiments illustrated, the precast concrete slabs each have precast beams integrally formed into the precast concrete slabs **10**, **12**, **14**, **16**. Precast concrete slab **10** has two precast beams **32**, **34**. Precast concrete slab **12** has two precast beams **33**, **35**. Precast concrete slab **14** has one precast beam **36** **32**, **34**. Precast concrete slab **16** has one precast beam **37**. The integrally formed beams **32**, **33**, **34**, **35**, **36**, **37** extend downwards from the precast concrete slabs **10**, **12**, **14**, **16**. The integrally formed beams are structural beams engineered to support the load of the building structure once constructed.

[0059] The term building module is intended to refer to a modular construction or building unit that is created off site, for example in a factory setting, and is transported on site to be assembled with other building modules to construct a multi-storey building. The building module could be provided in a basic form comprising a base and a frame, or facade, fixed to the base that forms the 'bones' of walls and a ceiling. Alternatively, the building module may comprise a building unit in an almost finished state including base, walls, ceiling and even fixtures. Logically, the building module may include a construction manufactured to a state between the basic and the almost finished forms discussed above.

[0060] Further information regarding methods for installing a building module above an existing building module (e.g. by using temporary support members) can be found in co-pending International Patent Application no. PCT/AU2017/050064 titled "METHODS AND APPARATUS FOR CONSTRUCTING MULTI-STOREY BUILDINGS", which also claims priority from Australian provisional application no. 2016902460 filed on 23 Jun. 2016 titled "METHODS AND APPARATUS FOR CONSTRUCTING BUILDINGS", and from Australian provisional application no. 2016903025 filed on 1 Aug. 2016 and titled "METHOD FOR CONSTRUCTING A CONCRETE FLOOR IN A MULTISTOREY BUILDING". The description and teachings of that co-pending international patent application is incorporated herein by reference to save reproducing that entire description herein.

[0061] Referring to FIGS. **4**A and **4**B, the precast concrete slab **10** of module **20** is shown in greater detail. The mould that is used to create the slab **10** is shaped so that the resulting slab has two beams **32**, **34** integrally formed into the slab **10**. The beams **32**, **34** are of greater thickness than the portion **11** of the slab **10** that does not have a beam. In other words, the first precast concrete floor slab has a first portion **11** and a second portion **101**, where the thickness of the second portion **101** is greater than the thickness of the first portion **11** (i.e. creating an integrally formed beam). The integrally formed beams **32**, **34** provide additional strength and help to reduce the number of beams that need to be poured on site during construction, thereby reducing the amount of time taken to pour each level of concrete at the building site. This can lead to more efficient construction times.

[0062] It is, however, understood that the method of construction does not necessarily require the precast floor slabs to include integrally poured beams. The slabs may instead be planar and arranged to be stitched, ie. connected, to other slabs that may or may not have integrally formed beams in order to provide a strong concrete floor constructed from a series of interconnected precast concrete floor slabs.

[0063] An advantage of forming a finished concrete floor from precast floor slabs connected through wet joints is that a large portion of the work in making the floor, which in a preferred embodiment forms part of a more complex modular building unit, can be carried out in a controlled factory setting. Furthermore, prefabricating certain components of the build should increase the efficiency and speed of the build.

[0064] In the presently described example, a multistorey building using modular building units can be built faster than with known systems because the modular units can be assembled one atop the other without waiting for each floor to be completed first. Accordingly, and by way of example, five levels of building units could be assembled in two days while in that same amount of time two floors of the five levels may be finished by connecting the floor slabs together through wet joints. The method allows the construction of the building to be decoupled from the more time consuming task of pouring concrete and allowing it to dry.

[0065] For example, as already described above, during multistorey construction a precast concrete floor slab in a building unit will be installed above the first precast concrete floor slab **10**. The upper building unit will be installed on top of and supported by the upstanding support members (e.g. the temporary support members **103** in some instances or permanent wall/facade structures or columns in other instances, or a combination of both) provided on the first, lower precast concrete floor slab **10**. The installation of the upper precast concrete floor slab above the lower precast concrete floor slab **10** can be carried out before the concrete beams **13**, **15** are poured. In this way the pouring of the concrete beams **13**, **15** is decoupled from the installation of the precast concrete floor slabs, as the upstanding support members are capable of fully supporting the next level of the construction, and indeed are capable of supporting multiple upper levels (eg. 5 levels) of construction.

[0066] The building modules **20**, **22**, **24**, **26** in a preferred embodiment comprise the precast concrete floor slabs **10**, **12**, **14**, **16** and upright supports in the form of a facade **21**, internal wall structure and/or temporary supports **103**. The building modules could also include location devices that guide and correctly locate for attaching an upper module in the correct position above a lower module. As shown in co-pending International Patent Application no. PCT/AU2017/050064 the location device may be a cone-shaped locator pin provided on the upright support (which is a temporary tripod support in the embodiment of that co-pending application) that acts as a dowel and is adapted to locate into a corresponding recess in an underside of the floor slab or side attachment (such as a facade) of the building module to be mounted above. Accordingly, building modules can be correctly positioned one above the other in the desired storey configuration without requiring any concrete work to be first completed.

[0067] Turning back to FIGS. **4**A and **4**B, the first beam **32** is parallel to the long edge **41** of the slab **10**. The second beam **34** is parallel to the short edge **43** of the slab **10**. The first beam **32** is positioned at a perimeter of the slab **10**. The second beam **34** is positioned at a perimeter of the slab **10**. The first beam **32** extends across the entire length of the long edge **41** of the slab **10**. The second beam **34** extends across the entire length of the short edge **43** of the slab **10**. The first beam **32** is perpendicular to the second beam **34**.

[0068] Although the beams have been shown as positioned at a perimeter of the slab **10**, it is envisaged that the beams could be offset from the perimeter. In other words, the beams may be inset from a perimeter of the slab. In addition, although the beams have been shown as positioned parallel to either the short or long edge of the slab of a module, it is envisaged that the beams could be positioned at an angle relative to the short or long edges of the slab.

[0069] Referring again to FIGS. **2**A to **3**B, the precast concrete slab **10** is used as part of a method of laying a larger floor slab of a building. The first precast concrete slab **10**, which is the base of building module **20**, is installed on site and a second precast concrete slab, for example slab **12** of building module **22**, is installed adjacent to and spaced from the first precast concrete slab **10**. Supporting formwork **23**, **39** is provided in the space **25** between the first and second slabs to form a channel **28** into which concrete for 'stitching' can be poured.

[0070] The supporting formwork could be provided as a separate structure, such as the sacrificial or removable formwork **23** as shown in FIG. **1**, or as supporting formwork integrally formed with the precast floor slab, such as the flange **39** laterally extending from the side of the floor slab as shown in FIGS. **6**, **10**(*a*), **10**(*b*), **11**(*a*), **11**(*b*) and **12**.

[0071] FIG. **1** illustrates preliminary formwork (bearers) erected at ceiling height between two adjacently spaced building modules **202**, **204**, which will form the formwork for the floor of the storey above, and full formwork with board erected at floor level between building modules **202**, **204**, which forms the formwork **23** for the floor between building modules **202**, **204**. Also visible in FIG. **1** are reinforcement bars **27** protruding inwardly into the space **25** that will form the wet joint connection between the precast floor slabs **102**, **104** of modules **202**, **204** respectively. The reinforcement bars **27** tie together the precast floor slabs **102**, **104** with the poured (wet joint) connection once the in situ poured connection is dried. The formwork forms a channel **28** into which concrete can be poured.

[0072] Concrete is poured into the channel **28** created by the formwork **23** to form a continuous concrete floor between the precast concrete floor slabs or, as shown in the embodiments of the drawings, concrete is poured to form beam **13** between the first precast concrete slab **10** and the second precast concrete slab **12**. Whether or not a beam is formed, the result is a continuous floor slab **17** of a building **100**. The concrete is poured to be level with a top surface of the first and second precast concrete floor slabs **10**, **12**. In other words, the poured concrete does not form a topping slab that overlays the first and second precast concrete floor slabs **10**, **12** (although this may be performed if desired). The poured concrete beam **13** is angled relative to the integrally formed beam **32** in the first precast concrete slab **10**, thereby forming a two-way tensioned or reinforced slab. In particular, the poured concrete beam **13** is perpendicular to integrally formed beam **32**.

[0073] An alternative embodiment but with similar effect is illustrated in FIGS. **10**(*a*) to **12**. In that embodiment adjacent floor slabs **400**, **500** are precast to have flanges **39**, or tongues, extending laterally of the sides of the floor slabs. The flanges of each floor slab are positioned facing each other with only a small gap **410** left between them, which is filled with a plastic or silicone filler. The almost abutting flanges **39** are thinner in height/thickness than the height/thickness of the floor slabs and so create a channel **28** where the two adjacent slabs meet. Similar to the above-described embodiment of the formwork **23** provided as a separate, non-integral structure, the channel **28** is adapted to be filled with wet concrete to create an in situ wet joint.

[0074] FIGS. **11**(*a*) and **11**(*b*) illustrate in perspective views a first module **20** with floor slab **400** that is located against a second module **22** with floor slab **500** ready for pouring, but before filling gap **410** with a filler. The cross-section diagram of FIG. **12** indicates in dotted lines the area **420** which will be occupied with in situ poured concrete. Reinforcement tie bars **27** embedded in the floor slabs **400**, **500** protrude sideways into the wet joint area **420**.

[0075] Referring back to FIG. **2**A, the completed slab **17** has four precast concrete slabs **10**, **12**, **14**, **16** and two poured concrete beams **13**, **15**. The thickness of the poured concrete beams **13**, **15** are substantially equal to the thickness of the integrally formed precast beam in the precast concrete slabs **10**, **12**, **14**, **16**. In other words the concrete beams **13**, **15** are poured to a thickness greater than a thickness of the first portion **11** of the first concrete floor slab **10**. The concrete beams **13**, **15** are poured to a thickness substantially equal to the thickness of the second portion **101** of the first concrete floor slab **10** (i.e. to a thickness substantially equal to the thickness of the integrally formed concrete beams **34**, **37**). The precast beams **34** and **37** in precast slabs **10** and **16** are co-axial, the precast beams **32** and **33** in precast slabs **10** and **12** are co-axial, and the precast beams **35** and **36** in precast slabs **12** and **14** are co-axial.

[0076] Once the poured beams **13**, **15** set precast beams **34** and **37** in precast slabs **10** and **16** form a single continuous beam, precast beams **32** and **33** in precast slabs **10** and **12** form a single continuous beam, and precast beams **35** and **36** in precast slabs **12** and **14** form a single continuous beam. This results in the completed floor slab **17** having five beams in total, as shown in FIG. **3**B, some of which are angled to each other. Specifically, the completed floor slab includes a combination of perpendicularly aligned precast and poured beams. The single continuous beams may span the entire length or width of the completed slab **17**.

[0077] While it is preferable for the poured beams **13**, **15** and the integrally formed beams **32**, **33**, **34**, **35**, **36**, **37** to have substantially the same thickness, it is envisaged that the poured beams **13**, **15** could be thicker than the integrally formed beams **32**, **33**, **34**, **35**, **36**, **37**, or that the integrally formed beams **32**, **33**, **34**, **35**, **36**, **37** could be thicker than the poured beams **13**, **15**.

[0078] The precast beams are cast with reinforcement tie bars **27** protruding from their side edges that are embedded into the wet in situ joint and assist in tying the precast slabs to the poured connections. The tie bars may be in the form of reinforcement bar, or steel angle cast along the edge of a floor slab.

[0079] It is envisaged that the building module **20**, or the precast concrete slab **10** on its own, could be constructed at a first location, and then moved, for example by being

transported from the first location to an installation location, where the building module is installed. The first location may be a factory or a warehouse where the initial components of the first building module **20** may be more easily assembled in an assembly line fashion, in order to assist in shortening overall construction time.

[0080] Alternatively, if there is room on the building site, an assembly area may be located, for example, in an area that is designated as a courtyard in the finished building. In this example the first building module **20**, or the precast concrete slab **10** on its own, can be constructed on the building site in a designated assembly area before being moved into position, for example by a crane, and installed. It will be understood that locating the assembly area, or factory, on the building site will help reduce transportation costs.

[0081] It will be understood that by installing the temporary support members **103** and the façade **21** before the precast concrete floor slabs are moved into the installation position the building site can operate with increased safety. This is because the installation of the outer walls removes the live edge of the building site, thereby eliminating a live edge for workers to fall from. In addition, by removing the live edge the construction process also becomes more efficient as there is no need for external barriers to be installed around the building before workers can enter the worksite.

[0082] While the precast concrete slabs **10**, **12**, **14**, **16** are described above as being connected by pouring concrete **11** between the modules, additional steps can be used to further increase the strength of the finished slab **17**. Specifically, strengthening can be achieved by use of reinforcement bars or mesh in the wet joint and/or post-tensioning the finished, continuous wet joint/precast combination floor.

[0083] Referring now to FIGS. **5** to **9**, a post-tensioning technique is demonstrated. Two precast slabs, shown as first precast concrete slab **40** and second precast concrete slab **50**, are connected by poured concrete **60**. The first precast slab **40** has a bore **42** that extends through the first precast slab **40**. The bore may be in the form of a cast conduit into which will be received the tension cable. The bore **42** in the first precast slab **40** extends out of opposite ends of the first precast slab **40**. The second precast slab **50** has a bore **52**, or cast conduit, that extends through the second precast slab **50**. The bore **52** in the second precast slab **50** extends out of opposite ends of the second precast slab **50**.

[0084] The bores **42**, **52** in the first and second precast slabs **40**, **50** can be formed using any suitable method. For example, the bores **42**, **52** may be formed when casting the precast slabs **40**, **50**. For example, a conduit (not shown) may be placed in a mould for the precast slab and concrete poured around the conduit so that the conduit is embedded in the precast slab **40**, thereby forming a bore in the precast slab **40**.

[0085] During installation of the precast slabs **40**, **50** the first precast slab **40** is installed first. The second precast slab **50** is installed adjacent and spaced from the first precast slab. As shown in FIG. **5**, the second precast slab **50** is installed so that it is in the same plane as the first precast slab **40**, regardless whether or not the slabs **40**, **50** are elevated. The second precast slab is preferably installed so that the bore **52** in the second precast slab **50** is aligned with the bore in the first precast slab **40**. More specifically, the second precast slab **50** is preferably installed so that the bore **52** in the second precast slab **50** lies in the same plane as the bore **40** in the first precast slab **40**.

[0086] A conduit **62** is installed in the formwork between the bore **42** in the first precast concrete slab **40** and the bore **52** in the second precast concrete slab **50** to extend the tensioning passage **64** through both the first and second precast concrete slabs **40**, **50**. Specifically, the conduit **62** is connected to the bore **42** in the first module **40** and the bore **52** in the second module **50**, thereby forming a continuous tensioning passage **64** from one end of the first precast slab **40** to the opposite end of the second precast slab **50**.

[0087] In other words, the tensioning passage **64** extends the entire way through both the first precast slab **40** and the second precast slab **50**, allowing a cable to be fed through the tensioning passage **64** such that the cable extends out of an end of the first precast slab **40**, and extends out of an end of the second precast slab **50**. The conduit **62** is connected to the bores **42**, **52** to form a seal. The seal is fluid tight and prevents the ingress of concrete into the tensioning passage **64**.

[0088] The tensioning passage may be formed in a draped profile, undulating between slabs and at the outer facade edge of the building (as shown in FIG. **6**) to increase the level of tension achieved by post tensioning.

[0089] Concrete **60** is poured to connect the first and second precast slabs **40**, **50**, forming a slab of a building **70**. The concrete surrounds the conduit **62**, thereby embedding the conduit **62** in the poured concrete **60** as well as the in situ bars protruding from the side edges of the precast floor slabs.

[0090] Once the concrete **60** has set a tendon or cable (not shown) is fed through the tensioning passage **64** and the cable is tensioned. Tensioning of the cable applies a compressive force to the first precast slab **40**, the second precast slab **50**, and the concrete **60** connecting first and second precast slabs **40**, **50**. Tensioning the completed slab **70** acts to strengthen the slab, allowing it to support more weight.

[0091] The tensioning process involves fixing one end, the dead end, of the cable using an anchor (not shown) and then pulling the opposite, live end of the cable using a winch or stressing jack. As shown in FIG. **7**, the precast panel **140** may have a stressing pocket **144** that the jack stressing machinery sits in to tension the cable. The stressing pocket can be formed when casting the precast concrete slab by including a sacrificial fibreboard or foam block.

[0092] Once the slab has been tensioned to stress the concrete floor under the desired compression the live cable ends are tied and/or grout tube containing the cable is filled with high strength grout under pressure to fix the cable in tension.

[0093] While the tensioning passage **64** has been described as a single passage in a single direction, it is envisaged that there could be multiple bores in a single precast concrete slab that are used to form multiple tensioning passages. These bores could be substantially parallel to each other to provide tensioning in a single direction, or they could be angled to one and other, for example perpendicular and overlapping, in order to provide tensioning in two or more directions. Referring to FIG. **7**, first precast slab **150** has a first bore **152** and a plurality of second bores **154**. The plurality of second bores **154** in the second precast slab **150** are substantially perpendicular to the first bore **152**.

[0094] Referring to FIG. **5** four tensioning passages **65** (made from conduits) are shown in the intermediate concrete

connection **60**, which are parallel to each other and perpendicular to the tensioning passage **64** that extends through the first and second precast slabs **40**, **50**. In addition, while only one cable has been described as passing through the tensioning passage **64**, it is envisaged that two or more, three or more, four or more, or five or more cables could be used in each of the tensioning passages **64**, **65**. As shown in FIG. **5**, each tensioning passage **65** has four tensioning cables **66**.

[0095] Referring to FIGS. **8** and **9**, the precast concrete slab **240** has a beam **241** and a plurality of bores **242**. The bores **242** are located in the precast beam **241**.

[0096] It will be understood that the method of post-tensioning two precast concrete slabs can be used on its own, or in combination with the method of forming a slab using precast concrete slabs with integrally formed beams. In other words, while the connection to form a post-tensioned slab has been described with reference to modules having one or more precast beams, it will be understood that the method of connecting modules to form a slab could be applied to modules without precast beams.

[0097] It is also understood that steel reinforcement bars and/or mesh can be used in place of post-tensioning in order to strengthen the completed floor including the in situ connection between precast floor slabs.

[0098] In addition, as described above with reference to the precast concrete slabs **10**, **12**, **14**, **16**, the first and second precast concrete slabs **40**, **50** may form the base of a building module for a modular building. The first and second precast concrete slabs **40**, **50**, or any building modules using the first and second precast concrete slabs **40**, **50** to form the base of the building module, may be made offsite, as described above with reference to precast concrete slabs **10**, **12**, **14**, **16** and building modules **20**, **22**, **24**, **26**.

[0099] Referring to FIGS. **1** to **6**, an example of forming a floor slab of a multistorey building will now be described in detail. The process begins in a warehouse, where steel beams are positioned on a construction bed/table. Conduits for forming tensioning passages are laid cross ways and overlappingly tied in position. A sacrificial fibreboard block is positioned to form a stressing pocket. Alternatively, the table may be laid with reinforcement bar instead of tensioning conduits. Angles and/or tie bars (generally more reinforcement bars) are also aligned to protrude from the outer edges of what will be the floor slab.

[0100] The bed/table has recesses or voids that result in the precast concrete slab **10** being thicker in these areas. These areas of greater thickness form the integrally formed precast beams **32**, **34** when the concrete has set. The recesses or voids are perpendicular, resulting in perpendicular beams **32**, **34**.

[0101] Once the table has been prepared concrete is poured to form a precast concrete slab **10** that forms a floor of a building module **20**. This process embeds the conduits and/or reinforcement bar into the precast concrete slab **10** and creates beams that are integrally formed with the precast concrete slab **10**. The steel beams are also partially embedded in the concrete slab, which add rigidity to the precast concrete slab **10**.

[0102] Once the concrete slab has set the precast concrete slab **10** is removed from the construction bed/table. The precast concrete slab **10** is used to form a building module for a modular building. This can involve installing support structures, walls, fixtures and fittings, as desired.

[0103] Once the building module has been completed to the desired state the first building module **20** is transported from the warehouse to an installation location, such as a building site. The first building module **20** is then installed at the building site (either on the ground floor or above another building module already installed.

[0104] Aside from the ground level modules, installation will involve the building modules being craned and assembled in storeys, with the precast floor slabs of each module suspended above the floor below.

[0105] Once the first building module **20** has been installed a second building module **22** is installed spaced adjacent to the first building module. The second building module **22** is manufactured and assembled in warehouse in a similar way to the first building module **20**. The second building module **22** also has precast concrete beams **33**, **35** and bores for tensioning cables. The second building module **22** is positioned so that the integrally formed beam **33** in the second precast concrete slab **12** is parallel and in the same plane as the integrally formed beam **32** in the first precast concrete slab **10**. The second building module **22** is also positioned so that at least one bore in the second precast concrete slab **12** is aligned, and in the same plane as, at least one bore in the first precast concrete slab **10**.

[0106] Once the first and second building modules **20**, **22** have been installed formwork is either erected in the space between the modules **20** and **22**, or is already provided as an integrally extending flange of the module. In the embodiment illustrated in FIG. **1** the formwork is made from sacrificial fibreboard or the like to take the desired form of the finished connection. This could be in the form of a poured beam, as described above, or a simple level connection between the precast slabs **10** and **12** that continues in the same plane as the precast slabs.

[0107] If using post-tensioning, a conduit is installed between the aligned bores in the first and second precast concrete slabs **10**, **12** to form a tensioning passage that extends through both the first and second precast concrete slabs **10**, **12**.

[0108] A concrete beam, or simple connection, is then poured between the first and second precast concrete slabs **10**, **12** to connect the first and second precast slabs **10**, **12**. This process forms a completed slab. The poured concrete beam surrounds the conduit connecting the aligned bores, thereby embedding the conduit in the poured beam. Once the poured beam sets the precast beams **32** and **33** form a single continuous beam. The poured beam is perpendicular to the continuous beam (made from the precast beams **32** and **33**) that it creates.

[0109] Once the concrete beam has set four tensioning cables are fed through the tensioning passage so that the cables extend out of the first precast concrete slab and the second precast concrete slab. The end of the cables that extend from the second pre-cast slab **12** are fixed to the second pre-cast slab **12**. The ends of the cables that extend from the first pre-cast slab **10** extend into the stressing pocket in the first precast slab **10**. A stressing jack is used to tension the cables. Once the cables have been tensioned excess cable is cut off and the stressing pocket in the first precast slab **10** is filled with concrete to form a flat upper surface and to hide the cables.

[0110] While feeding the cable through the tensioning passage has been described as occurring after the concrete beam has been poured and has set, it is envisaged that the

cable could be fed through the tensioning passage any time after the conduit between the aligned bores has been installed.

[0111] While the methods above have only been discussed in relation to two slabs connected side-by-side, or four slabs in a 2×2 configuration, it is envisaged that multiple other configurations could also be created. For example, the slabs may be configured in a 2×1 configuration, a 2×3 configuration, a 2×4 configuration, a 3×4 configuration etc. For example, FIG. **8** illustrates three precast concrete slabs **240**, **250**, **270** side-by-side.

[0112] Precast slab **240** has a precast beam **241**. The three precast slabs **240**, **250**, **270** are connected together by poured concrete beams **260**, **280**. The precast slab **240** has a plurality of bores **242** for receiving a tensioning cable. Precast slab **270** is connected to a precast outer wall **280**.

[0113] As shown in FIG. **9**, the precast slabs, such as slab **240**, may be cast with a perimeter, or partial perimeter, of prefabricated channel (PFC) **271** which adds rigidity and strength to the slab. The PFC may also take part in the side attachment of wall structures, such as facades. Alternatively, other fixing means such as brackets may be provided on the slab for side attachment of wall structures. It is understood the slab may be sufficiently stable during construction to not require any PFC.

[0114] The method described herein may also include vertically inserting a pre-fabricated concrete wall panel in between the adjacently spaced precast floor slabs. FIG. **7** illustrates a lower precast wall panel **170** inserted below and between precast floor slabs **140** and **150**. In situ connection **160** is formed between slabs **140** and **150** and contains tension conduits **162**, **165** extending in perpendicular directions. As discussed below, connection **160** can be cast to tie into the upper end of lower wall panel **170**. An upper precast wall panel **172** is positioned on top of connection **160**, with lower panel **170** bearing the weight of upper panel **172**.

[0115] Pre-fabricated wall panels are also described in the abovementioned co-pending International Patent Application titled "METHODS AND APPARATUS FOR CONSTRUCTING MULTI-STOREY BUILDINGS", and which also claims priority from Australian provisional application no. 2016902460 filed on 23 Jun. 2016, and from Australian provisional application no. 2016903025 filed on 1 Aug. 2016 and titled "METHOD FOR CONSTRUCTING A CONCRETE FLOOR IN A MULTISTOREY BUILDING".

[0116] The wall panel can be lowered in position by crane and forms structural support for the building. The wall panels are tied at an upper end to the precast floor slabs and formwork provided around the wall panel and between the floor slabs, as required, along the length of the upper end of the wall panel. Concrete can then be poured into the formwork to form a wet joint to finish the floor and incorporating the wall panel on an underside of the floor including any tie bars.

[0117] It is to be understood that, if any prior art publication is referred to herein, such reference does not constitute an admission that the publication forms a part of the common general knowledge in the art, in Australia or any other country.

[0118] In the claims which follow and in the preceding description of the invention, except where the context requires otherwise due to express language or necessary implication, the word "comprise" or variations such as "comprises" or "comprising" is used in an inclusive sense, i.e. to specify the presence of the stated features but not to preclude the presence or addition of further features in various embodiments of the invention.

1. A building module used for constructing a modular multi-storey building, the building module being fabricated at an off-site location to an installation location, the building module comprising a precast concrete floor and a permanent outer wall fixed at a side edge of the floor so that the outer wall is suspended by the concrete floor to extend vertically upward and defines part of a façade of the building; the outer wall being suspended by the floor to extend laterally and upwardly from the side edge of the floor by a connection partially embedded along the side edge such that the connection bears the load of the outer wall at the side edge during transportation from the off-site location to the installation location; wherein when the building module is installed at the installation location, the outer wall forms an external safety barrier.

2. The building module claimed in claim **1**, wherein the connection comprises a bracket of the outer wall connected to a fixing joint embedded along the side edge of the floor.

3. The building module claimed in claim **1**, wherein one or more temporary support members are fixed onto the floor.

4. The building module claimed in claim **3**, wherein the temporary support member is configured to vertically support at least part of a further building module above the building module at the installation location until the further building module is connected to a permanent support structure that supports the further building module, whereafter the temporary support member is removed.

5. The building module claimed in claim **4**, wherein the temporary support member has a tripod support structure.

6. The building module claimed in claim **3**, wherein the temporary support member includes a locator provided on the temporary support member to assist in correctly locating the further building module above the building module.

7. The building module claimed in claim **1**, wherein the precast concrete floor is a concrete slab precast with reinforcement.

8. The building module claimed in claim **1**, wherein the precast concrete floor is a concrete slab precast with integrally formed concrete beams.

9. A method of constructing a multistorey building, the method including:

pre-fabricating a first building module off-site, the first building module having a precast concrete floor and a permanent outer wall fixed at a side edge of the floor so that the outer wall is suspended by the concrete floor to extend vertically upward and defines part of a facade of the building; the outer wall being suspended by the floor to extend laterally and upwardly from the side edge of the floor by a connection partially embedded along the side edge such that the connection bears the load of the outer wall at the side edge during transportation from the off-site location to the installation location;

transporting the first building module assembled with the outer wall to the installation location; and

placing the first building module by crane on top of an already installed second building module so that the outer wall of the first building module aligns above an outer wall of the second building module, whereby the outer walls of the first and second building modules form external safety barriers.

10. The method claimed in claim **9**, including installing a third building module adjacent to the first building module.

11. The method claimed in claim **9**, including supporting the first building module above the second building module with temporary support members fixed to the concrete floor of the second building module.

12. The method claimed in claim **11**, including connecting the first building module to a permanent support structure between the first and second building modules to vertically support the first building module above the second building module, and removing the temporary support members.

13. The method claimed in claim **12**, including supporting the first building module above the second building module with a permanent support member mounted between the first and second building modules.

14. The method claimed in claim **11**, including supporting multiple levels of building modules above the second building module by way of temporary support members before connecting the multiple levels of building modules to permanent support structures, whereafter the temporary support members are removed.

* * * * *