(12) INTERNATIONAL APPLICATION PUBLISHED UNDER THE PATENT COOPERATION TREATY (PCT)

(19) World Intellectual Property Organization
International Bureau

(43) International Publication Date
3 July 2008 (03.07.2008)

PCT

(10) International Publication Number
WO 2008/079591 A1

(51) International Patent Classification:
G09B 29/10 (2006.01)

(21) International Application Number:
PCT/US2007/086047

(22) International Filing Date:
30 November 2007 (30.11.2007)

(25) Filing Language: English

(26) Publication Language: English

(30) Priority Data:
11/613,776 20 December 2006 (20.12.2006) US

(71) Applicant *(for all designated States except US)*: **THE BOEING COMPANY** [US/US]; 100 North Riverside Plaza, Chicago, Illinois 60606-2016 (US).

(72) Inventor; and

(75) Inventor/Applicant *(for US only)*: **KENNEDY, Brian, B.** [US/US]; 10225 SW Eastridge St., Portland, Oregon 97225 (US).

(74) Agents: **TSUDA, Diane, M.** et al.; The Boeing Company, P.O. Box 2515, MC 110-SD54, Seal Beach, California 90740-1515 (US).

(81) Designated States *(unless otherwise indicated, for every kind of national protection available)*: AE, AG, AL, AM, AT, AU, AZ, BA, BB, BG, BH, BR, BW, BY, BZ, CA, CH, CN, CO, CR, CU, CZ, DE, DK, DM, DO, DZ, EC, EE, EG, ES, FI, GB, GD, GE, GH, GM, GT, HN, HR, HU, ID, IL, IN, IS, JP, KE, KG, KM, KN, KP, KR, KZ, LA, LC, LK, LR, LS, LT, LU, LY, MA, MD, ME, MG, MK, MN, MW, MX, MY, MZ, NA, NG, NI, NO, NZ, OM, PG, PH, PL, PT, RO, RS, RU, SC, SD, SE, SG, SK, SL, SM, SV, SY, TJ, TM, TN, TR, TT, TZ, UA, UG, US, UZ, VC, VN, ZA, ZM, ZW.

(84) Designated States *(unless otherwise indicated, for every kind of regional protection available)*: ARIPO (BW, GH, GM, KE, LS, MW, MZ, NA, SD, SL, SZ, TZ, UG, ZM, ZW), Eurasian (AM, AZ, BY, KG, KZ, MD, RU, TJ, TM), European (AT, BE, BG, CH, CY, CZ, DE, DK, EE, ES, FI, FR, GB, GR, HU, IE, IS, IT, LT, LU, LV, MC, MT, NL, PL, PT, RO, SE, SI, SK, TR), OAPI (BF, BJ, CF, CG, CI, CM, GA, GN, GQ, GW, ML, MR, NE, SN, TD, TG).

Published:
— *with international search report*

[Continued on next page]

(54) **Title:** SYSTEM AND METHOD FOR IDENTIFYING CHANGES ON NAVIGATION PROCEDURE CHARTS

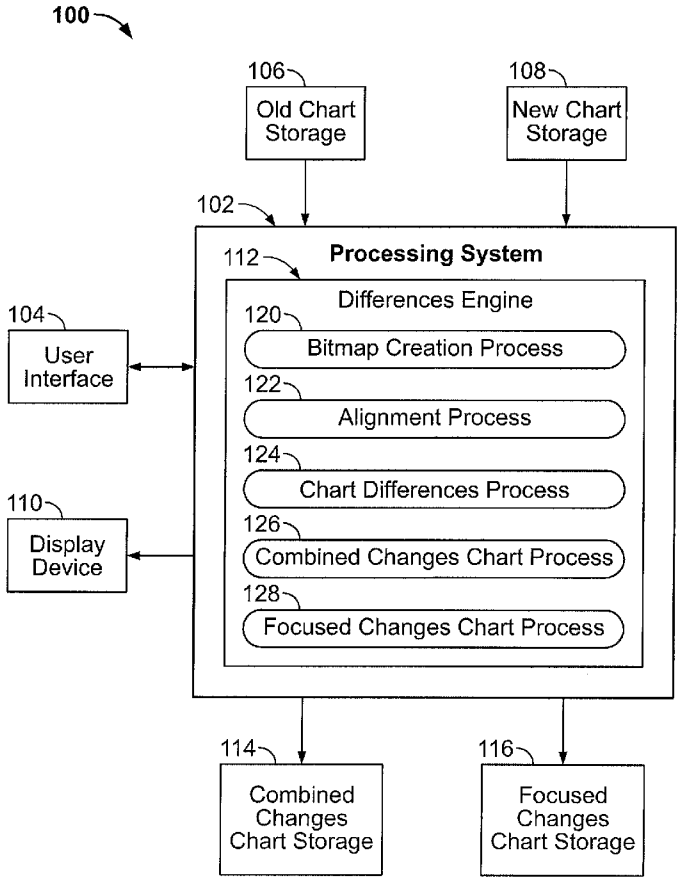

(57) **Abstract:** A system and method are provided for identifying changes on navigation procedure charts. A processing system is coupled with a user interface and a display device for access and display of old and new navigation procedure charts from different revision cycles. A computer software-based differences engine of the processing system obtains an old navigation procedure chart from an old chart storage memory and a new navigation procedure chart from a new chart storage memory. The differences engine determines changes in information from the old navigation procedure chart to the new navigation procedure chart. The navigation procedure charts may, for example, be aeronautical charts. The changes in information are visually identified such that the user can easily determine the changes that have been made from an old chart to a corresponding new chart.

WO 2008/079591 A1

— *before the expiration of the time limit for amending the claims and to be republished in the event of receipt of amendments*

SYSTEM AND METHOD FOR IDENTIFYING CHANGES ON NAVIGATION PROCEDURE CHARTS

FIELD OF THE INVENTION

[0001] The present invention relates generally to navigation procedure charts such as aeronautical charts and marine navigation charts, and more particularly to systems that display navigation procedure charts that are periodically updated.

BACKGROUND OF THE INVENTION

[0002] Navigation procedure charts are used to assist in navigation of carrier vehicles such as airplanes, marine vessels (e.g. ships, boats, etc.), rail vehicles or trucking vehicles. For example, aeronautical charts, in particular, are used by pilots to gain an understanding of the geographic layout of an airport including the airport terminals as well as the surrounding vicinity of an airport which may include arrival and departure areas. Arrival and departure areas may, for example, cover an area within 100 miles of an airport. Aeronautical charts provide information that is particularly useful to pilots for take-off and landing of an airplane at an airport as well as approaches to and departures from an airport. Sets of aeronautical charts may be delivered to pilots or other personnel in various ways such as in paper form or in electronic form on a computer-readable storage device (such as a CD-ROM). Typically, the number of charts actually delivered may be very high, for instance, a new set of aeronautical charts may include hundreds or even many thousands of charts.

[0003] In order to accurately reflect geographic and procedural changes made relating to a terminal, its approaches and procedures, aeronautical charts are periodically updated with such changes. Thus, a customer of aeronautical charts (such as a pilot or other aircraft personnel) periodically will receive an entire new set of charts. A new set may, for example, be sent out on a computer-readable device, such as a CD-ROM, to customers every two to four weeks. The memory devices delivered to customers, for instance, may store thousands of aeronautical charts with some charts being changed and other charts left unchanged. Often,

during a revision cycle a relatively small percentage of charts are changed; however, this may still amount to hundreds of aeronautical charts being changed out of the many thousands of charts delivered. The customer may selectively view and print out the stored charts from a computer device or view displayed charts on an airplane by placing the CD-ROM (or other memory device) in a portable computer device (such as a laptop computer) that is carried on the airplane itself.

[0004] Navigation procedure charts, such as aeronautical charts, have a significant amount of detail and are often technically complex. Thus, in many instances it may be difficult to determine which charts have changed between revision cycles. Furthermore, even if a navigation procedure chart is known to have been changed it is beneficial to be able to easily identify the chart elements that have been changed among the detailed information in the chart. Accordingly, there is a need to provide navigation procedure charts that easily identify changes that have been made from a past revision cycle.

SUMMARY

[0005] A system and method are provided for identifying changes on navigation procedure charts. A processing system is coupled with a user interface and display device for access and display of various navigation procedure charts. A computer software-based differences engine of the processing system obtains an old navigation procedure chart from an old chart storage memory and a new navigation procedure chart from a new chart storage memory. The differences engine determines changes in information from the old navigation procedure chart to the new navigation procedure chart. The changes in information are visually identified such that the user can easily determine the changes that have been made from the old navigation procedure chart to the new navigation procedure chart.

[0006] In an exemplary embodiment, the old and new navigation procedure charts comprise an old aeronautical chart and a corresponding new aeronautical chart from different

revision cycles. Changes in aeronautical information from the old aeronautical chart to the new aeronautical chart are determined by the processing system and are identified such that added changes are displayed in one format and removed changes are displayed in another format. In addition to aeronautical applications, navigation procedure charts may be used in various other applications such as marine navigation, rail hub management or trucking hub management. Various types of navigation procedure charts (such as aeronautical charts, marine navigation charts, rail hub management charts, trucking hub management charts) may be analyzed in order to identify changes between corresponding old and new charts.

BRIEF DESCRIPTION OF THE DRAWINGS

[0007] Fig. 1 is a system diagram illustrating an example system for identifying changes on navigation procedure charts.

[0008] Fig. 2 is a flow chart illustrating an example of processing steps at a differences engine component of the system of Fig. 1.

[0009] Fig. 3 illustrates an example display of a list of aeronautical charts for user selection and viewing.

[0010] Fig. 4 illustrates an example of an original charts display that displays an old aeronautical chart adjacent to corresponding new aeronautical chart.

[0011] Fig. 5 illustrates an example of an old aeronautical chart displayed adjacent to a combined changes chart highlighting added and removed information relating to the corresponding new aeronautical chart.

[0012] Fig. 6 illustrates an example identifying added and removed information on a portion of an aeronautical chart.

[0013] Fig. 7 illustrates an example of an old aeronautical chart displayed adjacent to a focused changes chart that emphasizes chart information changes and de-emphasizes non-changes between corresponding old and new aeronautical charts.

DETAILED DESCRIPTION

[0014] A system and method for identifying changes on navigation procedure charts are provided. A computer-based processing system interacts with a user interface and a display device to provide user access and display of navigation procedure charts stored in memory. Navigation procedure charts may be used in various applications such as aeronautical navigation, marine navigation, rail hub management or trucking hub management. Thus, various types of navigation procedure charts including aeronautical charts, marine navigation charts, rail hub management charts, and trucking hub management charts may be analyzed by the processing system in order to determine and identify changes between corresponding old and new charts. Navigation procedure charts generally graphically and textually depict one or more of: procedures, navigation aids, communication frequencies, navigation points or aids, or notes that may be used by a crew member to navigate a vehicle or craft. A navigation procedure chart may also graphically depict physical geography to assist in navigation. Sets of navigation procedure charts associated with various revision cycles are accessible by the processing system. At each periodic revision cycle, a new set of navigation procedure charts are provided and may be accessed by the processing system. Various navigation procedure charts in the set may have changes in chart elements such as geographic or textual navigational information relative to corresponding charts from previous revision cycles.

[0015] In an exemplary embodiment, aeronautical charts are analyzed to determine changes between an old aeronautical chart from one revision cycle and a new aeronautical chart from a more recent revision cycle. Changes in aeronautical information from the old aeronautical chart to the new aeronautical chart are determined by the processing system and are identified such that added changes are displayed in one format and removed changes are displayed in another format. The aeronautical charts, which may include, for example, airport terminal charts with related surrounding geographic information, are accessed by the processing

system for display on a display device. An aeronautical chart may graphically and textually depict aeronautical, geographical, and physical elements as well as procedures used by pilots to navigate to or from an airport. The processing system may be implemented, for example, on any type of computer system capable of processing computer programs such as a personal computer, laptop computer, server, on any other computer-based device.

[0016] The processing system, in response to user selection, accesses a selected aeronautical chart from a set of charts relating to one revision cycle and accesses as a corresponding aeronautical chart from another set relating to another revision cycle and compares the two charts for changes. The charts obtained will generally correspond to one another, for example, they may relate to the same airport terminal or geographic location. Since the aeronautical charts that are compared to one another by the processing system are associated with different revision cycles, at least one chart will be an old aeronautical chart (from a prior revision cycle) relative to the new aeronautical chart from a more recent or updated revision cycle. The changes in information between the selected old aeronautical chart and the new aeronautical chart are visually displayed and graphically highlighted in order for the user to easily determine added or removed changes between corresponding aeronautical charts obtained from chart sets relating to different revision cycles.

[0017] Referring to Fig. 1, system 100 for identifying changes on navigation procedure charts is shown. For purposes of illustration, the navigation procedure charts described with reference to Figs. 1-7 are aeronautical charts; however, other types of navigation charts such as marine navigation or nautical charts may be employed. System 100, in this example, has processing system 102 coupled with user interface 104 to provide for user selection and access to old aeronautic charts digitally stored in electronic format in old chart storage memory 106. Processing system 102 is also coupled with new chart storage memory 108 which stores new aeronautical charts associated with a revision cycle that comes after the earlier

revision cycles. Processing system 102 obtains an old aeronautical chart from old chart storage memory 106 and a new aeronautical chart from a new chart storage memory 108 for display and user viewing on display device 110, such as a computer screen, cathode ray tube (CRT), or any other display apparatus associated with the processing system. User interface 104 may, for example, be a keyboard, mouse, graphical user interface (GUI) or any other interface that allows a user to interact with the processing system.

[0018] Chart display 400, seen in Fig. 4, shows a example of an old aeronautical chart 402 adjacently positioned for display next to a corresponding new aeronautical chart 404. In this example, charts 402, 404 have a number of different generally rectangular-shaped sections providing aeronautical information. Charts 402 and 404, include: header section 406 providing text information; a geographic plan view section 408 of the associated region, a profile view section 410 that provides altitude information, and a minimums section 412 providing further aeronautical data generally in text form.

[0019] Referring again to Fig. 1, differences engine 112 of processing system 102, in this example, is a computer software-based engine that determines changes in information from an old aeronautical chart to a corresponding new aeronautical chart. The differences engine component 112 further creates a combined changes chart 510, Fig. 5, that may be displayed or saved for storage at combined changes chart storage 114 in memory. A combined changes chart identifies changes on a chart from a previous chart in which added changes are reflected in one format (such as displayed in one color) and removed changes are reflected in another format (such as displayed in another color). Differences engine component 112 also may selectively create a focused changes chart 710, Fig. 7, for display or storage at focused changes chart storage 116, Fig. 1, in memory. A focused changes chart identifies the changes between an old chart and a new chart by displaying the added changes and removed changes as in a combined changes chart and also de-emphasizing the similarities between the

two charts. In creating these charts 510, 710 the differences engine component 112 of processing system 102 graphically highlights the changes in information between the selected old aeronautical chart 402, Fig. 4, and the new aeronautical chart 404.

[0020] In order for the user to be able to quickly and easily review changes made between corresponding old and new charts from different revision cycle sets, differences engine 112 creates combined changes chart 510, Fig. 5, in which added changes are graphically highlighted for display in one format and removed changes are graphically highlighted for display in another format. For instance, added changes from the old chart 402, Fig. 4, to the new chart 404 are displayed in one easily identifiable color (such as red) and removed changes from the old chart to the new chart are displayed in another easily identifiable color (such as yellow). The different formats corresponding to different types of changes may be displayed as different colors, different patterns, different display fonts or any other differentiating format to illustrate added changes versus removed changes between the charts.

[0021] As seen, differences engine component 112, Fig. 1, in this example, includes bitmap creation process 120, alignment process 122, chart differences process 124, combined chart changes process 126, and focused changes chart process 128. Bitmap creation process 120 is employed to convert old and new aeronautical charts from their stored electronic format into bitmaps. Alignment process 122 is used for alignment of the old aeronautical chart with the new aeronautical chart selected and determining the number of matching pixels counted between the charts when the charts are aligned. Chart differences process 124 examines pixel colors of the old chart and corresponding pixel colors of the new chart, aligned therewith, to determine information added to the new chart relative to the old chart and to determine information removed from the old chart relative to the new chart. The changes in aeronautical information identified and highlighted for visual display may include geographic aeronautical information and textual aeronautical information. Combined changes chart process 126 is

employed for creating combined changes charts such as chart 510 seen in the example in Fig. 5. Focused changes chart process 128, Fig. 1, is employed for creating focused changes charts 710, such as seen in the example in Fig. 7. As seen in Fig. 7, the added changes 520 and removed changes 530 are visually emphasized in focused changes chart 710 while non-changed information that remains the same between the old and new charts being compared are visually de-emphasized.

[0022] Referring again to Fig. 1, to determine changes between old aeronautical charts and corresponding new aeronautical charts, processing system 102 obtains input from old chart storage 106 and new chart storage 108 to identify which aeronautical charts from the stored sets of old and new charts have received changes. For example, each of the sets of aeronautical charts may comprise many thousands of different charts relating to airport terminals or geographic areas. At each revision cycle, for instance, a few hundred (e.g. 100-500) aeronautical charts out of the thousands in a set may have changes made to them. The processing system 102 determines which aeronautical charts in new chart storage have received changes and creates a list of aeronautical charts that have changes from the charts among a set of old aeronautical charts and a set of new aeronautical charts.

[0023] As seen in Fig. 3, processing system 102 creates for display on display device 110 a list 310 of aeronautical charts that have been changed. The user can select and compare charts that have been changed from one revision cycle to another cycle. For example, as seen in Fig. 3, the user may select view charts list tab 320 to select a chart that has changed between particular aeronautical chart revision cycles (e.g. cycle 05 of year 2006 versus cycle 07 of year 2006). The user may apply user interface 104, Fig. 1, to select a particular chart 315, Fig. 3, from the displayed list 310 to compare the corresponding old and new charts. Upon selection of a particular chart 315 from the chart difference list 310 the user may actuate a view chart button 330 for display of the selected charts. In response, the processing system 102 will extract

the selected old aeronautical chart from old chart storage 106 and the corresponding new aeronautical chart from new chart storage 108. The old and new charts may be stored in an electronic file format, such as a vector format. The processing system 102 obtains the electronic files for the corresponding old and new aeronautical charts in a compressed form and proceeds to decompress the old and new chart files obtained from old and new chart storage memory 106, 108.

[0024] Referring now to Fig. 2, the processing performed at differences engine component 112 of processing system 102 to determine and identify, for display, changes between corresponding old and new aeronautical charts is provided. The differences engine component 112 obtains the selected old aeronautical chart 402 and corresponding new aeronautical chart 404 as decompressed electronic files. In step 202, bitmap creation process 120 of differences engine 112 converts the old chart 402 and new chart 404 from the stored electronic format into in-memory bitmaps.

[0025] In step 204, alignment process 122 then applies multiple approaches to determine and select a preferred alignment approach for alignment of the old aeronautical chart 402 and the new aeronautical chart 404. In order to accurately compare the two bitmap representations of charts, the common parts of the old and new charts 402, 404 are matched closely. The old and new charts being compared, for instance, are not necessarily the same size. Further, the amount of white space on the sides may have changed and various portions of the charts may have been moved for better viewing. Alignment process 122, in this example, applies two different alignment approaches and selects a preferred approach having the most common ground between the old and new charts. One approach that may be used is a top-left alignment approach. In step 206, alignment process 122 finds non-white pixels at the top and left sides of the old and new charts aligns them together. Alignment process 122 starts comparing the charts 402, 404 at the first point (starting at the top left region) where there are non-white pixels on the

chart. Border size differences are ignored using this approach. In step 208, alignment process counts the matching pixels once the charts are aligned. A second approach is a designated chart areas alignment approach. In step 210, alignment process 122 aligns pre-defined rectangle areas of the old and new charts 402, 404, Fig. 4, that identify the header section 406, plan view section 408, profile view section 410, and minimums section 412 of the charts. In step 212, alignment process 122 counts the matching pixels using this approach.

[0026] In step 214, Fig. 2, alignment process 122 determines which alignment approach has the highest number of matching pixels and selects the alignment approach with the highest number for use in determining chart differences by chart differences process 124. In step 216, chart differences process 124, Fig. 1, of differences engine 112 compares the selected old chart 402, Fig. 4, and new chart 404 pixel by pixel. In step 218, Fig. 2, chart differences process 124 identifies changes from the old chart to the new chart. In particular, chart differences process 124 distinguishes between changes where information has been removed from the new chart versus changes where information has been added to the new chart.

[0027] In order to determine if information was added to or removed from an old chart to a new chart, chart differences process 124 applies a software-based heuristic test. Chart differences process 124 examines the colors of the corresponding old and new pixels. The software based heuristic test compares the pixel colors in the old chart to the corresponding pixel colors in the new chart to determine which changes are added information versus which changes are removed information. The software-based heuristic test is applied in which black or grey pixels in the old chart 402, Fig. 4, that change to non-black or non-grey pixels in the new chart 404 are considered removed information and changes that do not match the heuristic test are considered added information to the new chart. As noted, added information is identified for display in one format and removed information is in a different format in order for the user to easily distinguish between chart elements that have been added, removed, or remain unchanged.

In particular, chart differences process 124 may apply, and display identified changes in different colors to represent the two types of changes such as red for newly added information and yellow for removed information.

[0028] In step 220, Fig. 2, combined changes chart process 126 creates a combined changes chart in-memory bitmap. A combined changes chart 510, Fig. 5, may be displayed on display device 110, Fig. 1, for user viewing or saved and stored in memory for later retrieval. As seen in Fig. 5, in combined changed chart 510, added changes 520 are identified and graphically highlighted for display in one format (such as in red color) and removed changes 530 are identified and graphically highlighted for display in another format (such as in yellow color). In step 222, Fig. 2, combined changes chart process 126 may create a bitmap file of combined changes chart and output the created combined changes chart bitmap for storage in memory in combined changes chart storage 114.

[0029] In step 224, Fig. 2, focused changes chart process 128 creates a focused changes chart in-memory bitmap. Focused changes chart 710, Fig. 7, may be displayed on display device 110, Fig. 1, for user viewing or saved and stored in memory in focused changes chart storage 116 for later retrieval. As seen in Fig. 7, added and removed changes to chart information from the old chart to the new chart are emphasized on the focused chart changes. For example, added changes are graphically highlighted in one color (e.g. red) and removed changes in another color (e.g. yellow). Focused changes chart process 128 also visually de-emphasizes chart elements that remain unchanged from the old chart to the new chart. In creating focused changes chart 710, Fig. 7, process 128, Fig. 1, turns unchanged black or grey pixels from the combined changes chart 510, Fig. 5, into a light grey color, and turns any colored pixels that do not represent added or removed changes into a white color. Pixels that match in the old chart and new chart are turned into a de-emphasized light grey color and colored pixels representing terrain or water are removed by coloring them white. In step 226, focused changes

chart process 128 may output the focused changes chart 710 as a bitmap for storage in memory in focused changes chart storage 116.

[0030] Referring to Fig. 3, aeronautical charts list display 300 is shown and may be displayed upon user activation of a view chart list tab 320. A list 310 of aeronautical charts is provided for user selection indicating charts that have changes. For example, chart list 310 may display a listing of aeronautical charts that have changed between two revision cycles; such as charts relating to certain coverage areas for a particular customer. When a user selects a chart from the list 310, airport and associated information 335 for the chart is shown to the right of the list. The information 335 displayed assists the user in selecting a chart desired for viewing. A user may, for example, be able to search for a specific airport by entering an airport ID in a text edit box 340 below the chart list 310. The chart list 310 will scroll to the first chart for that airport. When the user has found a chart that is selected for comparing differences, a view chart button 330 may be actuated or double click actuation on the list entry 315 for the chart may be performed. This will prompt processing system 102, Fig. 1, to access aeronautical charts from both revision cycles, and display them side-by-side upon actuation of view original charts tab 322.

[0031] As seen in Figs. 4, 5 and 7, aeronautical chart displays for viewing changes to aeronautical charts are associated with three chart viewing tabs: view original charts tab 322, view combined changes tab 324, and view focused changes tab 326. These tabs 322, 324, 326 provide side-by-side (or top-bottom) viewing of old aeronautical charts 402 and corresponding new aeronautical charts 404, 510, 710 from different cycles. The displays as seen in the examples in Figs. 4, 5 and 7, show both the older cycle chart and the newer cycle chart together side-by-side. The new chart (relative to the old chart) may be displayed on the right-hand side of the display (or alternatively on the bottom when charts are shown in landscape

mode). A title bar 350 may be provided for display of the airport and chart identifier, and indicates which charts associated with particular revision cycles are shown in which window.

[0032] Referring to Fig. 4, user actuation of view original charts tab 322 shows old aeronautical chart 402 and corresponding new aeronautical chart 404 from selected revision cycles displayed in their original form. The view original charts tab 322 may be used as a baseline to view selected charts in their original form. Due to the significant amount of information that may be displayed on aeronautical charts, the changes from an old chart to a corresponding new chart may be subtle. The user may selectively use view combined changes tab 324 and view focused changes tab 326 to easily see what has changed to the charts between revision cycles. Referring to Fig. 5, user actuation of view combined changes tab 324 displays the selected old aeronautic chart 402 adjacent to a corresponding new aeronautic chart, but in the form of a combined changes chart 510 that identifies or marks the areas (such as textual and geographic information) that have changed from the old revision cycle to the new revision cycle. In particular, on the combined changes chart 510, Fig. 5, added changes are visually displayed in one format 520 and removed changes are visually displayed in another format 530 in order for the user to be able to easily identify the types of changes that have been made. The different formats may be different colors (such as red and yellow), different patterns, different display fonts or any other differentiating format to graphically illustrate the added changes versus the removed changes made to the charts. Information that has not been changed remains the same and is displayed in the same form as seen in the old aeronautical chart 402.

[0033] Referring to Fig. 6, an example illustrating the visual identification of added and removed changes between an old aeronautical chart and a corresponding new chart (as a of portion combined changes chart) is provided. The display 602 on the left-hand illustrates example portions of an old aeronautical chart. The display 604 on the right hand illustrates corresponding example portions with different display formats to highlight added changes 520

and removed changes 530. In this example, one color (such as red) is used to illustrate information on the chart that has been added since the older revision chart. The 183 foot tower in this example seen in the right-hand portion 604 is added to a new aeronautical chart and is graphically highlighted in red color, for instance, to easily identify added changes 520. Additionally, another color (such as yellow) is used to illustrate information 530 on the chart that has been removed from the old aeronautical chart. As seen in the example in Fig. 6, the text relating to a "rotating beacon" may be graphically highlighted in a different format such as a yellow color, for instance, to easily identify text 530 that has been removed from the old chart and is not included in the new revision of the chart.

[0034] Referring to Fig. 7, user actuation of view focused changes tab 326 displays the selected old aeronautical chart 402 adjacent to a corresponding new aeronautic chart, but in the form of a focused changes chart 710. As with the combined changes chart 510 in Fig. 5, the focused changes chart 710, Fig. 7, illustrates and marks the chart information that has changed from the old cycle to the new cycle. Added changes are graphically highlighted in one display format (such as in a red color) and removed changes in another display format (such as in a yellow color). As seen in the example of Fig. 7, however, the information on the focused changes chart 710 that has no changes is displayed in a light grey color in order to make the changes in chart information to stand out. The focused changes chart 710 display for identifying chart changes may be useful when aeronautical charts contain terrain, or when changes indicated in color (e.g. red, yellow) may blend into the original charts. In this example, terrain and water features may be eliminated to give a more simplified and focused view of the changes. The focused changes chart 710 provides a representation that downplays the similarities between charts of different revision cycles and makes the differences stand out. The focused effect may be accompanied, for example, by turning black or grey pixels into a light grey color, leaving red, yellow and white pixels alone, and turning any other colored pixels into a white color.

[0035] The foregoing description of the preferred embodiments of the invention have been presented for purposes of illustration and description, and are not intended to be exhaustive or to limit the invention the precise forms disclosed. The descriptions were selected to best explain the principles of the invention and their practical application to enable others skilled in the art to best utilize the invention in various embodiments and various modifications as are suited to the particular use contemplated. It is intended that the scope of the invention not be limited by the specification, but be defined by the claims set forth below. For example, various navigation procedure charts such as marine navigation charts, rail hub management charts or trucking hub management charts may be employed as alternatives to aeronautical charts as described in the exemplary embodiment herein.

CLAIMS

What is claimed is:

1. A method for identifying changes on navigation procedure charts comprising:

obtaining an old navigation procedure chart from an old chart storage memory;

obtaining a new navigation procedure chart, relative to the old chart, from a new chart storage memory;

determining changes in information from the old navigation procedure chart to the new navigation procedure chart; and

visually identifying, for display, the changes in information between the old navigation procedure chart and the new navigation procedure chart.

2. The method of claim 1 further comprising graphically highlighting the changes in information between the old navigation procedure chart and the new navigation procedure chart.

3. The method of claim 2 wherein the step of graphically highlighting includes displaying added changes from the old chart to the new chart in one color and displaying removed changes from the old chart to the new chart in another color.

4. The method of claim 2 wherein the changes in information further comprise geographic information and textual information.

5. The method of claim 2 wherein the step of determining changes further comprises determining information added to the new chart relative to the old chart and determining information removed from the old chart relative to the new chart.

6. The method of claim 5 further comprising examining pixel colors of the old chart and corresponding pixel colors of the new chart; and

applying a software heuristic test that compares the pixel colors in the old chart to the corresponding pixel colors in the new chart to determine which changes are added information versus which changes are removed information.

7. The method of claim 5 further comprising creating a combined changes chart wherein added changes are graphically highlighted in one format and removed changes are graphically highlighted in another format.

8. The method of claim 7 further comprising creating a focused changes chart wherein changes in information from the old chart to the new chart are visually emphasized and non-changes in information from the old chart to the new chart are visually de-emphasized.

9. The method of claim 8 wherein the old navigation procedure chart is an old aeronautical chart and the new navigation procedure chart is a new aeronautical chart and wherein the step of creating the focused changes chart further comprises turning pixels that match in the old aeronautical chart and the new aeronautical chart into a light grey color and removing colored pixels representing terrain or water by coloring them white.

10. The method of claim 5 wherein the old and new navigation procedure charts are at least one of: a) aeronautical charts, b) marine navigation charts, c) rail hub management charts, and d) trucking hub management charts.

11. The method of claim 5 wherein the old navigation procedure chart is an old aeronautical chart and the new navigation procedure chart is a new aeronautical chart.

12. The method of claim 11 wherein the old and the new aeronautical charts are stored in an electronic format.

13. The method of claim 12 further comprising converting the old aeronautical chart and the new aeronautical chart from the stored electronic format into bitmaps.

14. The method of claim 13 further comprising applying a plurality of approaches relating to alignment of the old aeronautical chart with the new aeronautical chart.

15. The method of claim 14 further comprising counting a number of matching pixels for each alignment approach; and

selecting the alignment approach having the highest number of matching pixels.

16. The method of claim 11 further comprising creating a list of aeronautical charts that have changes from a plurality of old aeronautical charts to a plurality of corresponding new aeronautical charts.

17. The method of claim 16 further comprising obtaining the old aeronautical chart from the plurality of old aeronautical charts relating to one revision cycle;

obtaining the new aeronautical chart, corresponding to the old aeronautical chart, from the plurality of new aeronautical charts relating to another revision cycle; and

comparing the old aeronautical chart and the new aeronautical chart for changes.

18. A system for identifying changes on navigation procedure charts comprising:

a processing system adapted to obtain an old navigation procedure chart from an old chart storage memory and to obtain a new navigation procedure chart, relative to the old chart, from a new chart storage memory; and

a computer software-based engine component adapted to determine changes in information from the old navigation procedure chart to the new navigation procedure chart and to visually identify, for display, the changes in information between the old navigation procedure chart and the new navigation procedure chart.

19. The system of claim 18 wherein the engine component is adapted to graphically highlight the changes in information between the old navigation procedure chart and the new navigation procedure chart.

20. The system of claim 19 wherein added changes from the old chart to the new chart are displayed in one color and removed changes from the old chart to the new chart are displayed in another color.

21. The system of claim 19 wherein the changes in information further comprise geographic information and textual information.

22. The system of claim 19 wherein the engine component further comprises a chart differences process to determine information added to the new chart relative to the old chart and to determine information removed from the old chart relative to the new chart.

23. The system of claim 22 wherein the chart differences process examines pixel colors of the old chart and corresponding pixel colors of the new chart and applies a software heuristic test that compares the pixel colors in the old chart to the corresponding pixel colors in the new chart to determine which changes are added information versus which changes are removed information.

24. The system of claim 22 further comprising a combined changes chart process for creating a combined changes chart wherein added changes are graphically highlighted for display in one format and removed changes are graphically highlighted for display in another format.

25. The system of claim 24 further comprising a focused changes chart process for creating a focused changes chart wherein changes in information from the old chart to the new chart are visually emphasized and non-changes in information from the old chart to the new chart are visually de-emphasized.

26. The system of claim 25 wherein the old navigation procedure chart is an old aeronautical chart and the new navigation procedure chart is a new aeronautical chart and wherein creating the focused changes chart further comprises turning pixels that match in the old chart and the new chart into a light grey color and removing colored pixels representing terrain or water by coloring them white.

27. The system of claim 22 wherein the old and new navigation procedure charts are at least one of: a) aeronautical charts, b) marine navigation charts, c) rail hub management charts, and d) trucking hub management charts.

28. The system of claim 22 wherein the old navigation procedure chart is an old aeronautical chart and the new navigation procedure chart is a new aeronautical chart.

29. The system of claim 28 wherein the old and new aeronautical charts are stored in an electronic format.

30. The system of claim 29 further comprising a bitmap creation process that converts the old aeronautical chart and the new aeronautical chart from the stored electronic format into bitmaps.

31. The system of claim 30 further comprising an alignment process that applies a plurality of approaches relating to alignment of the old aeronautical chart with the new aeronautical chart.

32. The system of claim 31 wherein the alignment process counts numbers of matching pixels for each alignment approach and selects the alignment approach having the highest number of matching pixels.

33. The system of claim 28 wherein the processing system creates a list of aeronautical charts that have changes from a plurality of old aeronautical charts to a plurality of corresponding new aeronautical charts.

34. The system of claim 33 wherein the processing system is adapted to:

obtain the old aeronautical charts from the plurality of old aeronautical charts relating to one revision cycle;

obtain the new aeronautical chart, corresponding to the old aeronautical chart, from the plurality of new aeronautical charts relating to another revision cycle; and

comparing the old aeronautical chart and the new aeronautical chart for changes.

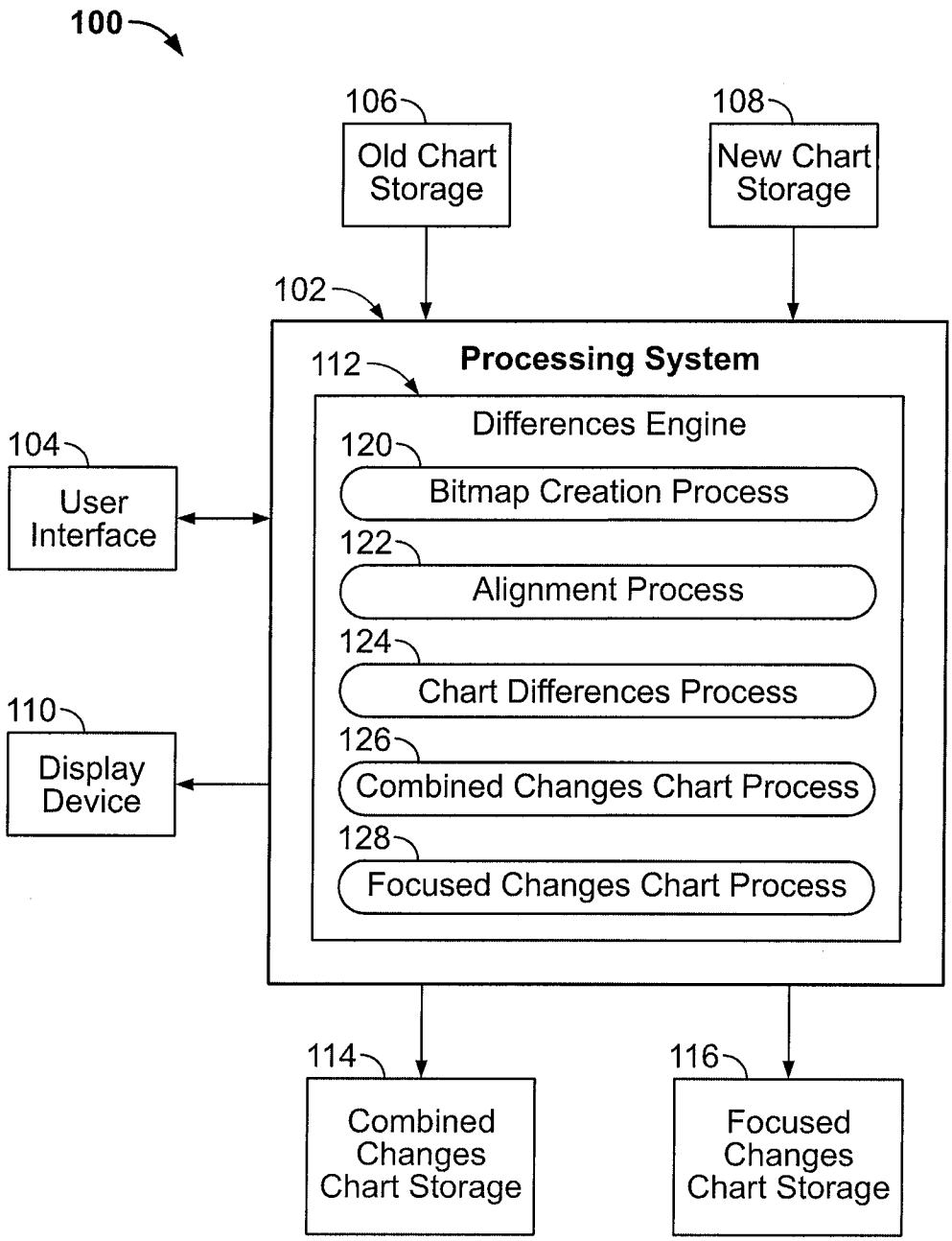
100
106
Old Chart Storage
108
New Chart Storage
102
112
Processing System
Differences Engine
120
Bitmap Creation Process
122
Alignment Process
124
Chart Differences Process
126
Combined Changes Chart Process
128
Focused Changes Chart Process
104
User Interface
110
Display Device
114
Combined Changes Chart Storage
116
Focused Changes Chart Storage

FIG. 1

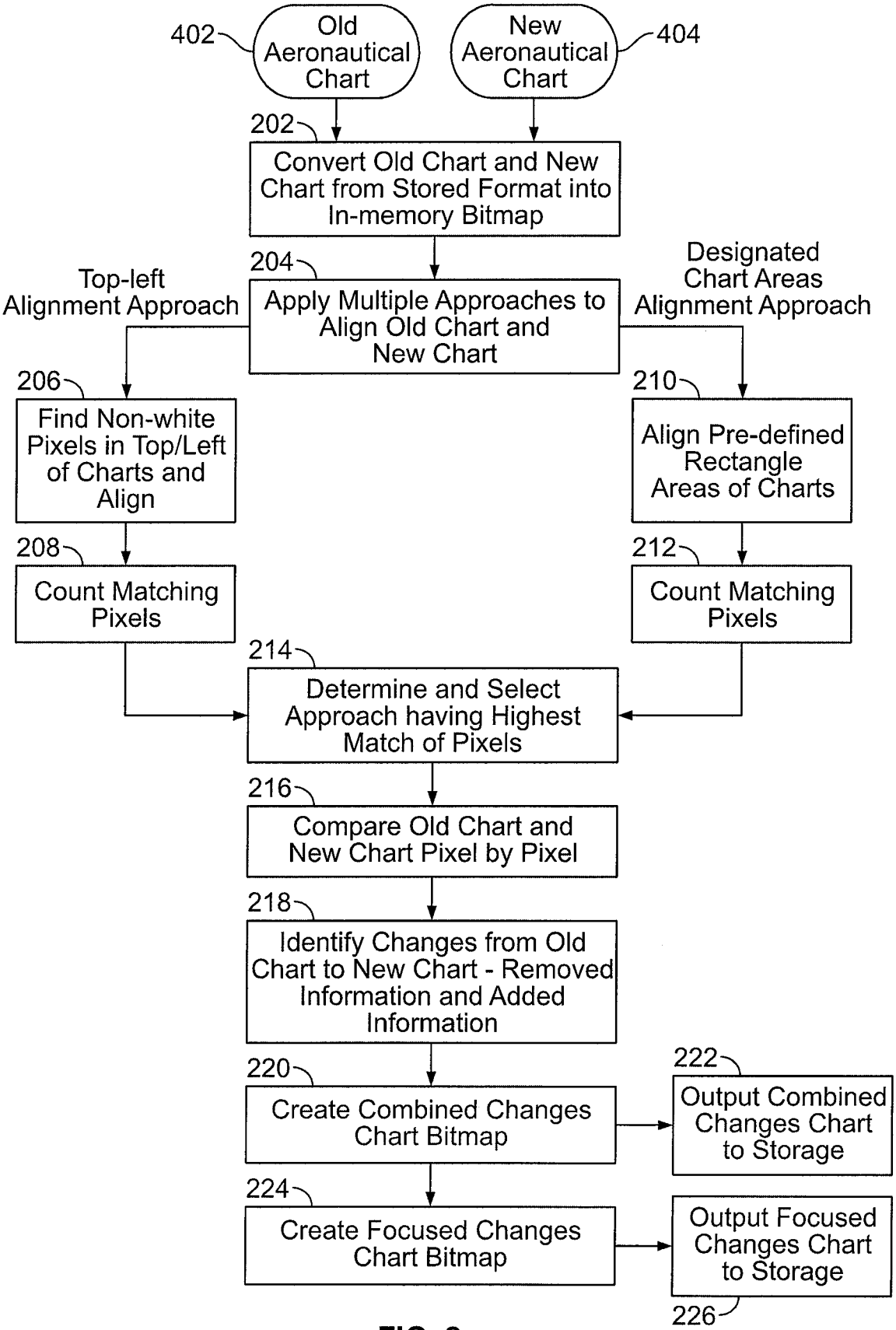
402
Old Aeronautical Chart
New Aeronautical Chart
404
202
Convert Old Chart and New Chart from Stored Format into In-memory Bitmap
204
Apply Multiple Approaches to Align Old Chart and New Chart
Top-left Alignment Approach
Designated Chart Areas Alignment Approach
206
Find Non-white Pixels in Top/Left of Charts and Align
208
Count Matching Pixels
210
Align Pre-defined Rectangle Areas of Charts
212
Count Matching Pixels
214
Determine and Select Approach having Highest Match of Pixels
216
Compare Old Chart and New Chart Pixel by Pixel
218
Identify Changes from Old Chart to New Chart - Removed Information and Added Information
220
Create Combined Changes Chart Bitmap
222
Output Combined Changes Chart to Storage
224
Create Focused Changes Chart Bitmap
Output Focused Changes Chart to Storage
226

FIG. 2

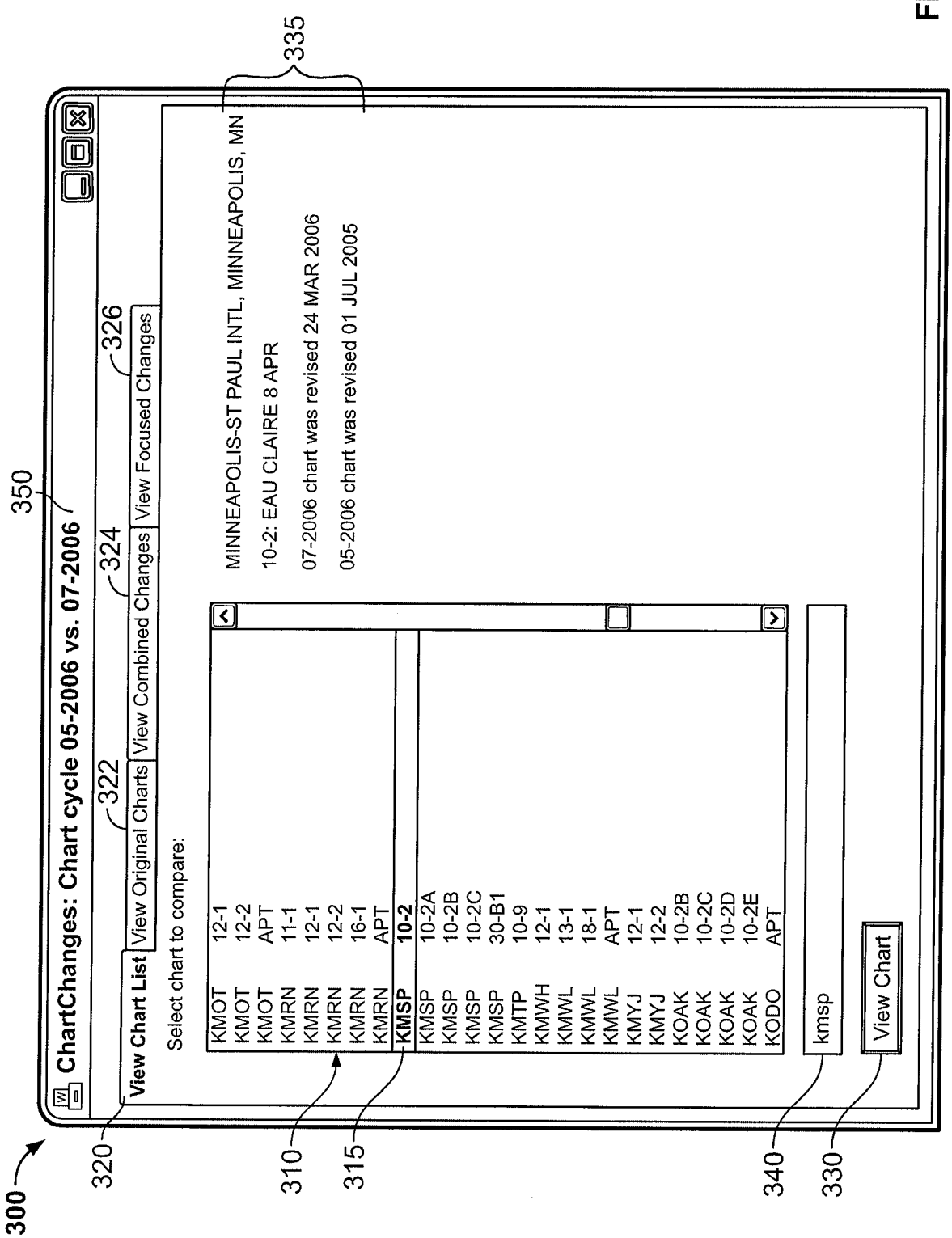
300
320
310
315
340
330
350
335
322
324
326
ChartChanges: Chart cycle 05-2006 vs. 07-2006
View Chart List
View Original Charts
View Combined Changes
View Focused Changes
Select chart to compare:
KMOT 12-1
KMOT 12-2
KMOT APT
KMRN 11-1
KMRN 12-1
KMRN 12-2
KMRN 16-1
KMRN APT
KMSP 10-2
KMSP 10-2A
KMSP 10-2B
KMSP 10-2C
KMSP 30-B1
KMTP 10-9
KMWH 12-1
KMWL 13-1
KMWL 18-1
KMWL APT
KMYJ 12-1
KMYJ 12-2
KOAK 10-2B
KOAK 10-2C
KOAK 10-2D
KOAK 10-2E
KODO APT
kmsp
View Chart
MINNEAPOLIS-ST PAUL INTL, MINNEAPOLIS, MN
10-2: EAU CLAIRE 8 APR
07-2006 chart was revised 24 MAR 2006
05-2006 chart was revised 01 JUL 2005

FIG. 3

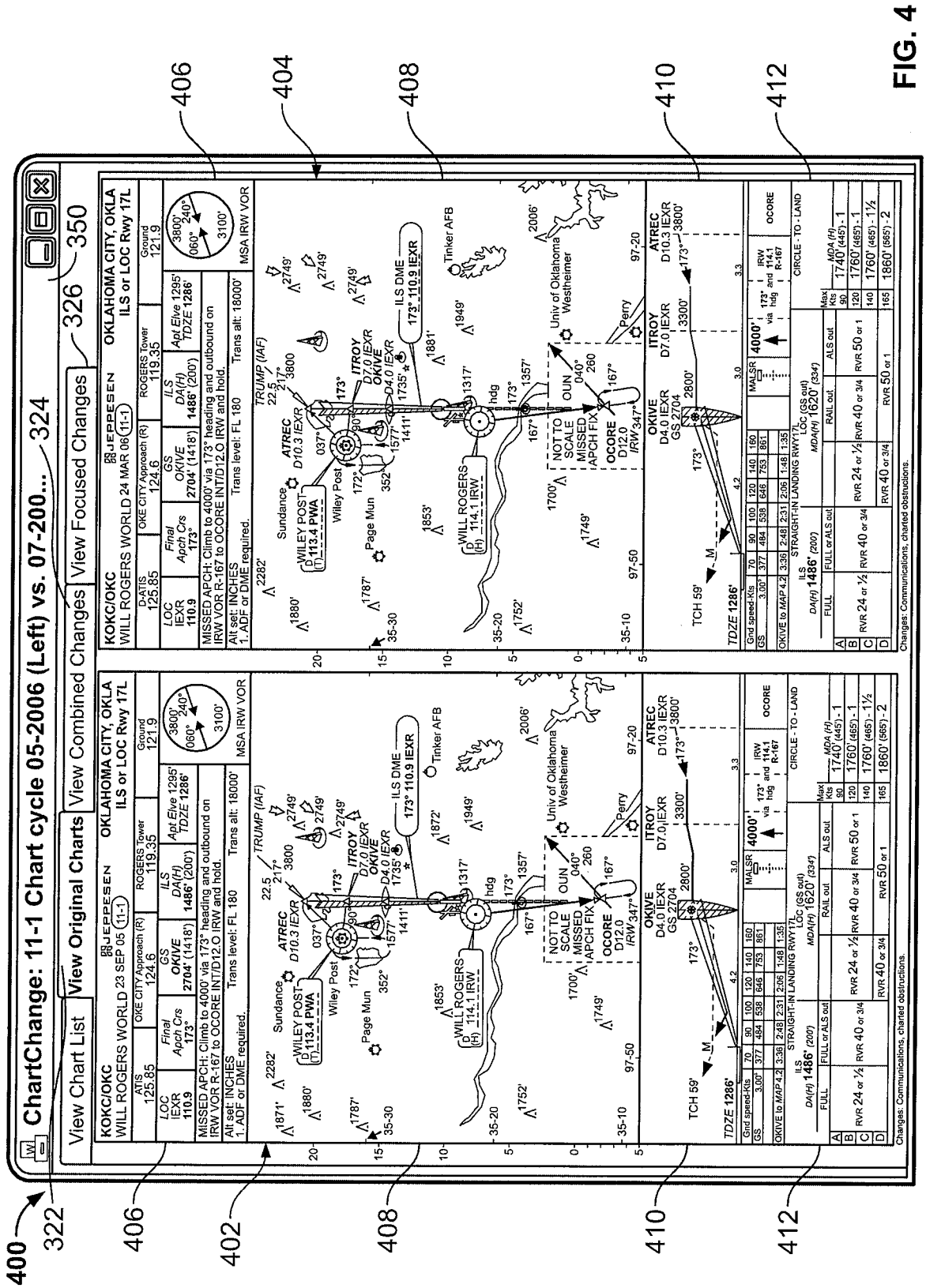
400
322
406
402
408
410
412
404
326
324
350
ChartChange: 11-1 Chart cycle 05-2006 (Left) vs. 07-200...
View Chart List
View Original Charts
View Combined Changes
View Focused Changes
KOKC/OKC
WILL ROGERS WORLD 24 MAR 06 (11-1)
OKLAHOMA CITY, OKLA
ILS or LOC Rwy 17L
JEPPESEN
ATIS 125.85
OKE CITY Approach (R) 124.6
ROGERS Tower 119.35
Ground 121.9
LOC IEXR 110.9
Final Apch Crs 173°
GS OKIVE 2704' (1418')
ILS DA(H) 1486' (200')
Apt Elve 1295' TDZE 1286'
MISSED APCH: Climb to 4000' via 173° heading and outbound on IRW VOR R-167 to OCORE INT/D12.0 IRW and hold.
Alt set: INCHES
1. ADF or DME required.
Trans level: FL 180
Trans alt: 18000'
MSA IRW VOR
TRUMP (IAF)
WILEY POST D 113.4 PWA
Sundance
ATREC D10.3 IEXR
Wiley Post
Page Mun
ITROY D7.0 IEXR
OKIVE D4.0 IEXR
ILS DME 173° 110.9 IEXR
Tinker AFB
WILL ROGERS D 114.1 IRW
NOT TO SCALE
MISSED APCH FIX
OCORE D12.0 IRW 347°
OUN 040° 260
Univ of Oklahoma Westheimer
Perry
TCH 59'
TDZE 1286'
OKIVE to MAP 4.2
STRAIGHT-IN LANDING RWY17L
ILS DA(H) 1486' (200')
LOC (GS out) MDA(H) 1620' (334')
CIRCLE - TO - LAND
FULL
FULL or ALS out
RAIL out
ALS out
RVR 24 or ½
RVR 40 or ¾
RVR 24 or ½
RVR 40 or ¾
RVR 50 or 1
RVR 40 or ¾
RVR 50 or 1
MDA (H) 1740' (445') - 1
1760' (465') - 1
1760' (465') - 1½
1860' (565') - 2
Changes: Communications, charted obstructions.

FIG. 4

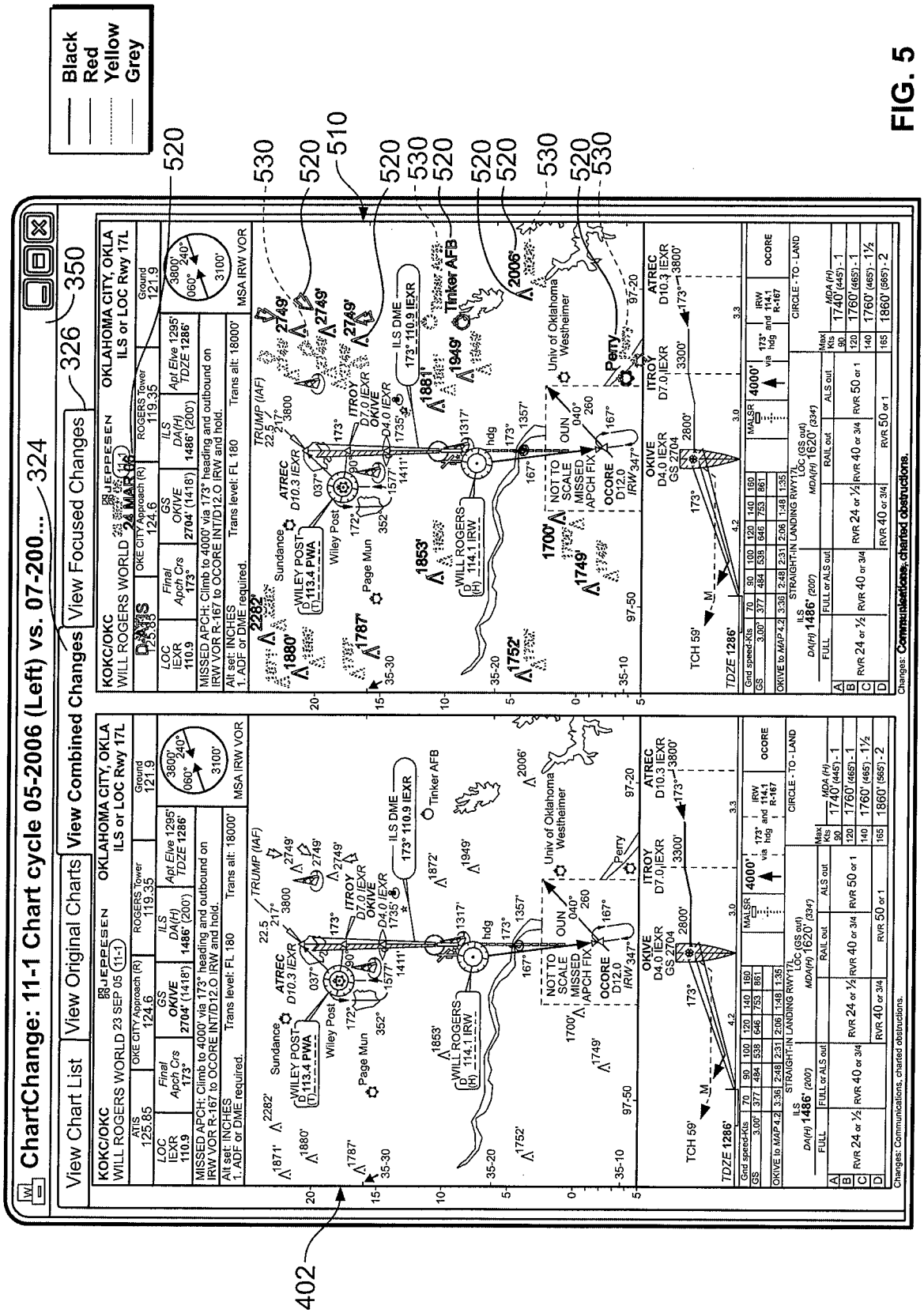
ChartChange: 11-1 Chart cycle 05-2006 (Left) vs. 07-200...
View Chart List
View Original Charts
View Combined Changes
View Focused Changes
KOKC/OKC
WILL ROGERS WORLD
OKLAHOMA CITY, OKLA
ILS or LOC Rwy 17L
Black
Red
Yellow
Grey
402
520
530
510
350
326
324

FIG. 5

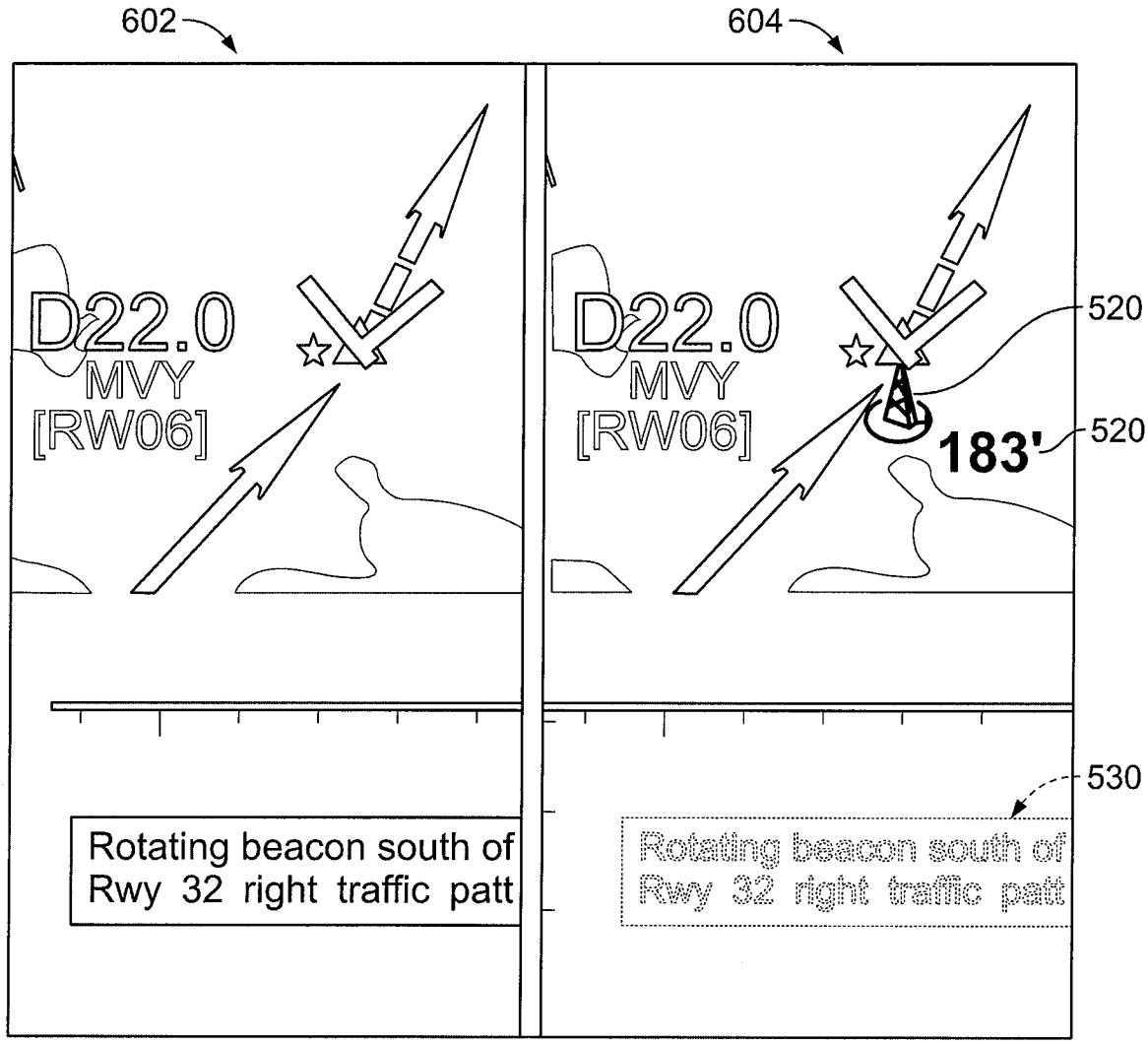
602
604
D22.0
MVY
[RW06]
D22.0
MVY
[RW06]
520
183'
520
530
Rotating beacon south of
Rwy 32 right traffic patt
Rotating beacon south of
Rwy 32 right traffic patt

FIG. 6

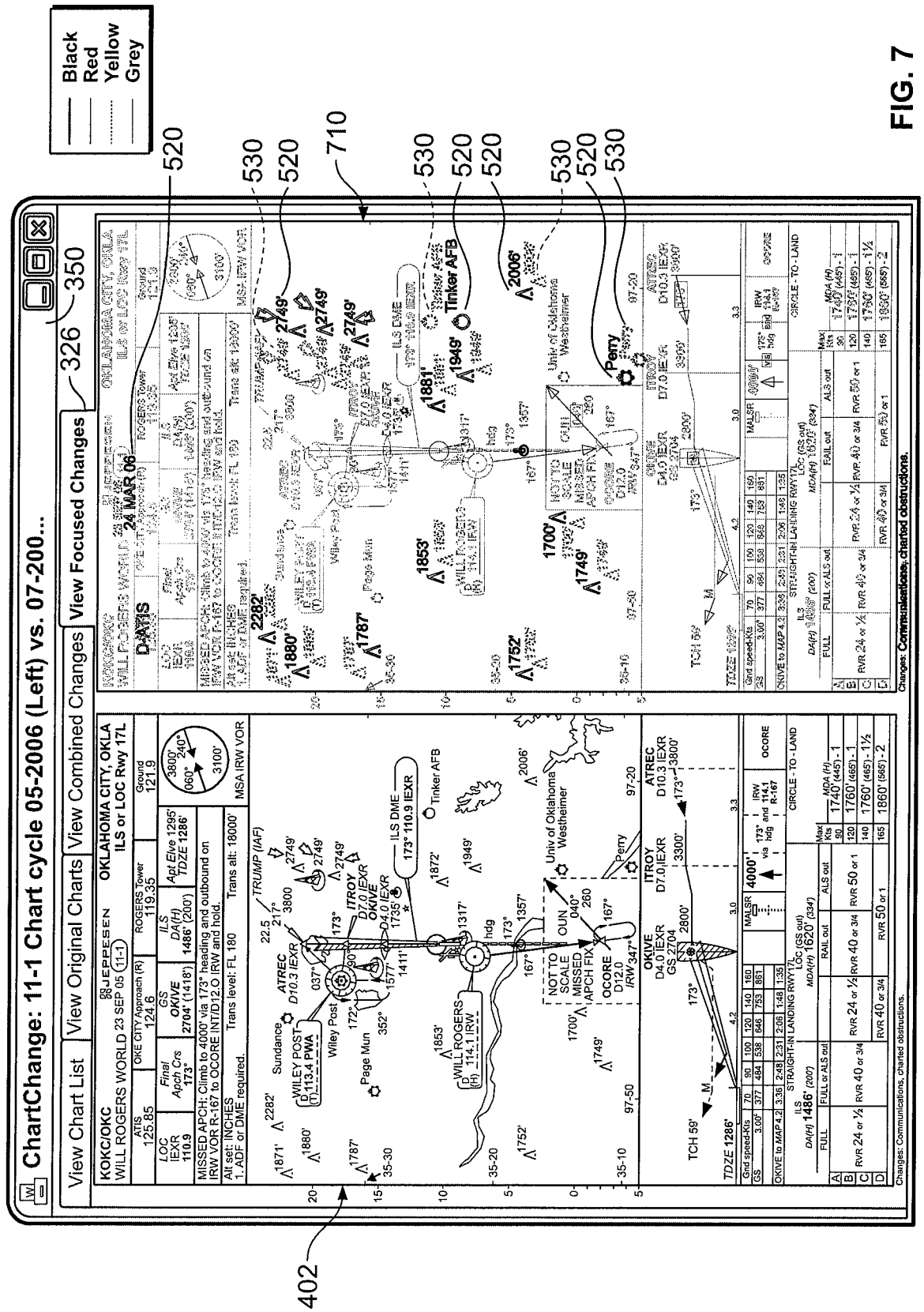
ChartChange: 11-1 Chart cycle 05-2006 (Left) vs. 07-200...
View Chart List
View Original Charts
View Combined Changes
View Focused Changes
Black
Red
Yellow
Grey
520
530
710
350
326
402

FIG. 7

INTERNATIONAL SEARCH REPORT

International applic
PCT/US2007/086047

A. CLASSIFICATION OF SUBJECT MATTER
INV. G09B29/10

According to International Patent Classification (IPC) or to both national classification and IPC

B. FIELDS SEARCHED

Minimum documentation searched (classification system followed by classification symbols)
G01C G08G G09B G06T

Documentation searched other than minimum documentation to the extent that such documents are included in the fields searched

Electronic data base consulted during the international search (name of data base and, where practical, search terms used)
EPO-Internal, WPI Data, INSPEC, IBM-TDB

C. DOCUMENTS CONSIDERED TO BE RELEVANT

Category*	Citation of document, with indication, where appropriate, of the relevant passages	Relevant to claim No.
X X	WO 02/40943 A (HONEYWELL INT INC [US]) 23 May 2002 (2002-05-23) abstract page 7, line 14 - page 10, lines 1-33 page 11, lines 1-14	2-17, 19-34 1,18
X	US 2002/082773 A1 (IKEUCHI TOMOYA [JP] ET AL) 27 June 2002 (2002-06-27) abstract paragraphs [0057] - [0059]; figures 30-33	1-34
A	EP 1 020 778 A (HONEYWELL INC [US]) 19 July 2000 (2000-07-19) paragraphs [0009], [0010], [0020]; figure 4	1-34

-/--

[X] Further documents are listed in the continuation of Box C.

[X] See patent family annex.

* Special categories of cited documents :

"A" document defining the general state of the art which is not considered to be of particular relevance

"E" earlier document but published on or after the international filing date

"L" document which may throw doubts on priority claim(s) or which is cited to establish the publication date of another citation or other special reason (as specified)

"O" document referring to an oral disclosure, use, exhibition or other means

"P" document published prior to the international filing date but later than the priority date claimed

"T" later document published after the international filing date or priority date and not in conflict with the application but cited to understand the principle or theory underlying the invention

"X" document of particular relevance; the claimed invention cannot be considered novel or cannot be considered to involve an inventive step when the document is taken alone

"Y" document of particular relevance; the claimed invention cannot be considered to involve an inventive step when the document is combined with one or more other such documents, such combination being obvious to a person skilled in the art.

"&" document member of the same patent family

Date of the actual completion of the international search	Date of mailing of the international search report
16 April 2008	29/04/2008

Name and mailing address of the ISA/	Authorized officer
European Patent Office, P.B. 5818 Patentlaan 2 NL – 2280 HV Rijswijk Tel. (+31-70) 340-2040, Tx. 31 651 epo nl, Fax: (+31-70) 340-3016	Dragomir, Adrian

INTERNATIONAL SEARCH REPORT

International applic
PCT/US2007/068047

C(Continuation). DOCUMENTS CONSIDERED TO BE RELEVANT

Category*	Citation of document, with indication, where appropriate, of the relevant passages	Relevant to claim No.
X	WO 98/15912 A (AMES MAPS L L C [US]) 16 April 1998 (1998-04-16) abstract; figure 11 page 12, lines 29-38 - page 13, lines 1-3 page 16, lines 1-21	1-34
A	US 2004/046712 A1 (NAIMER HUBERT [CH] ET AL) 11 March 2004 (2004-03-11) paragraphs [0030], [0032]; figure 7 abstract	1-34
A	WO 01/73734 A (PROVAR INC [US]) 4 October 2001 (2001-10-04) abstract page 8, lines 5-10	1-34
A	US 2002/097258 A1 (MAYMUDES DAVID M [US] ET AL) 25 July 2002 (2002-07-25) paragraphs [0169] - [0173]	1-34

INTERNATIONAL SEARCH REPORT

Information on patent family members

International appli
PCT/US2007/068047

Patent document cited in search report	Publication date	Patent family member(s)	Publication date
WO 0240943 A	23-05-2002	EP 1336080 A2	20-08-2003
		US 6542796 B1	01-04-2003
US 2002082773 A1	27-06-2002	DE 10163288 A1	25-07-2002
		JP 2002188926 A	05-07-2002
		KR 20020050735 A	27-06-2002
EP 1020778 A	19-07-2000	DE 60029034 T2	01-02-2007
		US 6240341 B1	29-05-2001
WO 9815912 A	16-04-1998	AU 728762 B2	18-01-2001
		AU 5238998 A	05-05-1998
		CA 2268065 A1	16-04-1998
		EP 0944872 A1	29-09-1999
		JP 2001525053 T	04-12-2001
		US 6314370 B1	06-11-2001
US 2004046712 A1	11-03-2004	AU 2003267099 A1	30-04-2004
		EP 1547059 A2	29-06-2005
		WO 2004025555 A2	25-03-2004
		US 2005057440 A1	17-03-2005
WO 0173734 A	04-10-2001	AU 5109401 A	08-10-2001
		EP 1328915 A2	23-07-2003
		US 2003052896 A1	20-03-2003
		US 7148898 B1	12-12-2006
		US 2001026270 A1	04-10-2001
		US 2001026271 A1	04-10-2001
		US 2001028348 A1	11-10-2001
US 2002097258 A1	25-07-2002	NONE	