Feb. 3, 1953 L. LUBEROFF 2,627,555

METHOD AND APPARATUS FOR SOUND RECORDING AND REPRODUCING

Filed April 13, 1950 2 SHEETS—SHEET 1

FIG. 1.

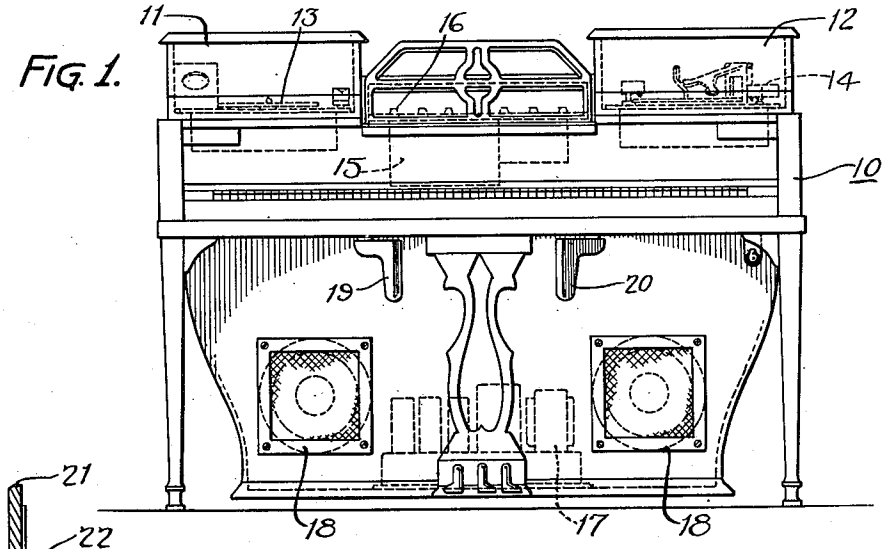

FIG. 2.

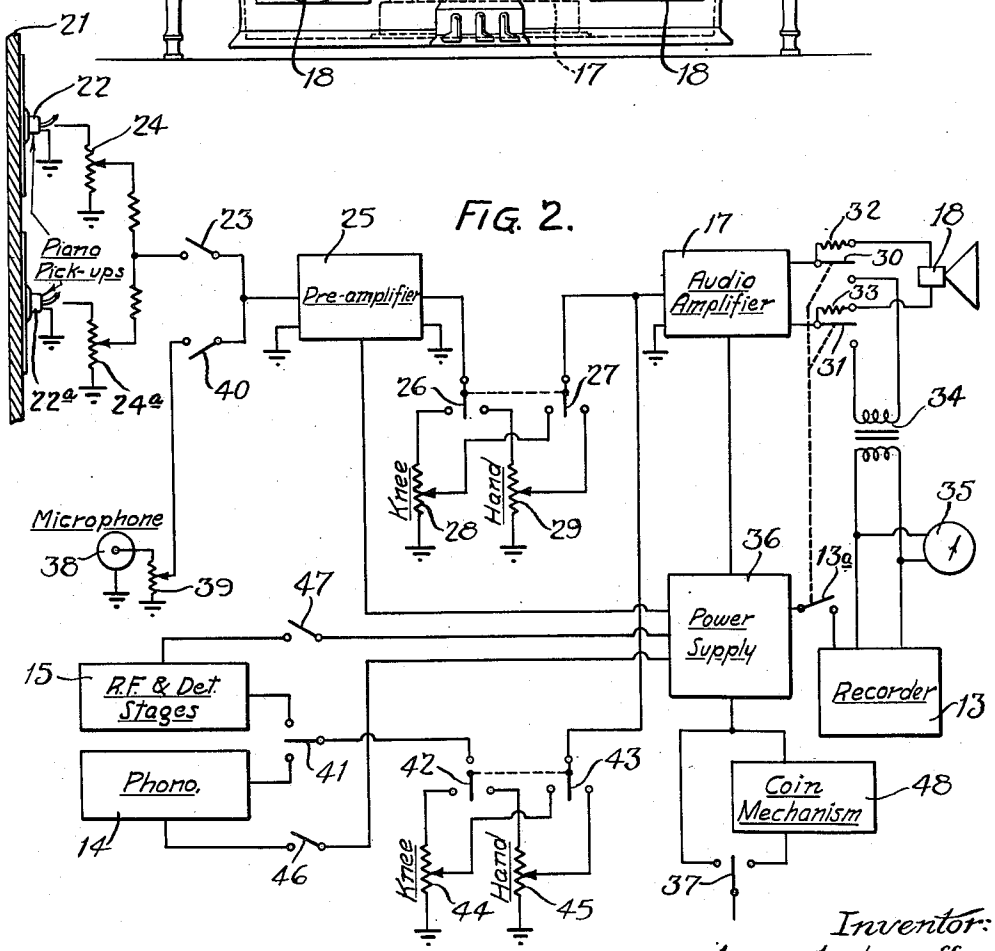

Inventor:
Louis Luberoff
by his Attorneys
Howson & Howson

Feb. 3, 1953 L. LUBEROFF 2,627,555

METHOD AND APPARATUS FOR SOUND RECORDING AND REPRODUCING

Filed April 13, 1950 2 SHEETS—SHEET 2

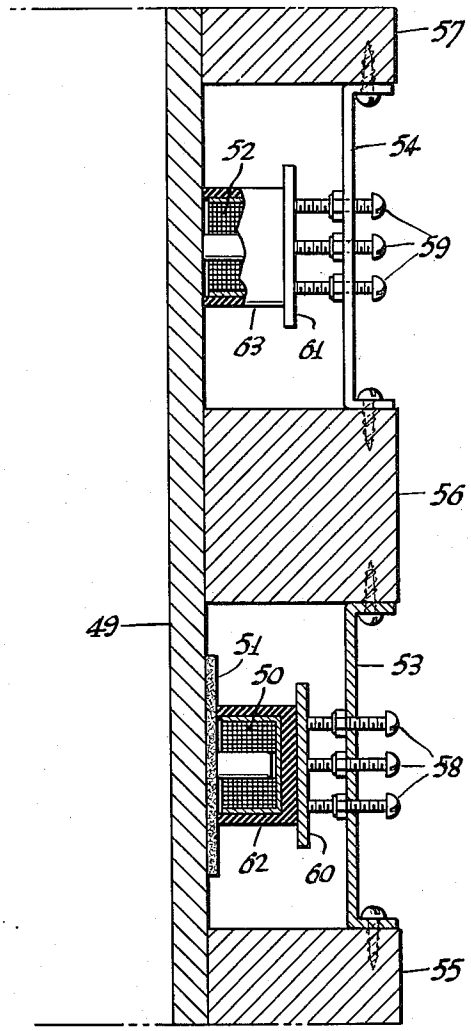

FIG. 3.

Inventor:
Louis Luberoff
by his Attorneys
Howson & Howson

Patented Feb. 3, 1953 2,627,555

UNITED STATES PATENT OFFICE

2,627,555

METHOD AND APPARATUS FOR SOUND RECORDING AND REPRODUCING

Louis Luberoff, Jenkintown, Pa.

Application April 13, 1950, Serial No. 155,750

14 Claims. (Cl. 179—100.11)

1

This invention relates to the recording and production of piano music either alone or in combination with other instrumentalities as hereinafter described.

The present application is a continuation-in-part of my copending application Serial No. 609,747, filed August 9, 1945, now Patent No. 2,530,251, issued on November 14, 1950.

One object of the present invention is to provide an improved method and system for recording piano music.

Heretofore, it has been the practice to record piano music by means of a microphone which receives sounds by air conduction from the piano and produces a corresponding electrical signal which is amplified and supplied to a recorder. This method of recording does not result in accurate sound reproduction of piano music. A predominant characteristic of the piano is that it has a rapid tone decadence, and because of such action, the microphone method of recording is not well suited for piano recording. Furthermore, the poor acoustics of many auditoriums and studios adversely affect recording by the microphone method, especially in the case of large auditoriums and studios where orchestra and piano concertos are performed and recorded. However, despite its disadvantages the microphone method has been used in the past for want of a better method.

In accordance with one aspect of the present invention, there is provided a method of piano recording which is entirely free of the shortcomings of the microphone method and which enables exact record reproduction of piano music. According to this method, the physical vibrations of the piano sounding board and for the associated strings are translated directly into an electrical signal which is amplified and supplied to a recorder. By this method, it is possible to control the amplitude of the signal through the use of hand or knee operated volume control means as hereinafter described. Furthermore, it is possible to utilize a combination of this method and the microphone method, with individual gain controls for the sounding board pickups and the microphone. Further still, in the preferred embodiment of the invention provision is made for utilizing a small portion of the signal as an audible indicating means during certain recording operations involving other instrumentalities as hereinafter described besides an electrical visual decibel meter.

Another object of the invention is to provide a novel system and novel devices for improved recording and production of piano music either alone or in combination with other instrumentalities.

2

The invention may be fully understood from the following detailed description with reference to the accompanying drawings, wherein:

Fig. 1 is a front elevational view of a piano embodying the present invention;

Fig. 2 is a diagrammatic illustration of the electrical system; and

Fig. 3 is a horizontal sectional view showing a preferred mounting of the pick-ups.

Referring first to Fig. 1, there is shown a piano 10 which may be of the character disclosed in my copending application Serial No. 53,808, filed October 11, 1948. Such piano is of the spinet type and it is provided with lid-closed compartments 11 and 12 within which there are disposed respectively a recorder 13 and a phonograph 14. The piano is also provided with radio receiving apparatus, the tuning section of which is centrally mounted as indicated at 15. Control knobs, designated generally by reference character 16, are provided to control the radio receiving apparatus and also to control the hand-operated elements mentioned hereinafter. An audio frequency amplifier is represented at 17. At least one loudspeaker 18 is provided, and if desired two loudspeakers or more may be arranged as shown in Fig. 1. A pair of knee-operated levers 19 and 20 are also provided, the purpose of which will appear presently.

It should be understood that the present invention is not limited to any particular design or type of piano, that illustrated in Fig. 1 being merely an example.

Referring now to Fig. 2, the piano sounding board, a portion of which is shown at 21, has associated therewith one or more pick-ups, there being two pick-ups 22 and 22*a* shown in the illustration These pick-ups may be conventional electromagnetic or other type pick-ups and they may be associated with the sounding board itself and/or with the strings (not shown) in any suitable manner so as to respond to the physical vibrations of the board and/or the strings. For simplicity of illustration, the two pick-ups are shown in association with the sounding board, but either or both could be of the electrostatic and/or electromagnetic type in association with the strings. The pick-ups are connected to a common switch 23 through separate volume controls 24 and 24*a*. The switch 23 is connected to the input of a preamplifier 25 whose output is connected to a double-throw switch 26 which op-

erates in tandem with a similar switch 27. The purpose of these switches is to render operative either a knee-operated volume control potentiometer 28 or a hand-operated volume control potentiometer 29. Switch 27 is connected to the input of audio amplifier 17, the output of which is connected to double-throw switches 30 and 31 which may be tandem operated. The sound reproducer or loudspeaker 18 is connected to the output of the audio amplifier 17 through stationary contacts of the switches 30 and 31 and through resistors 32 and 33 connected as shown. The recorder 13 is connected as shown to stationary contacts of the switches 30 and 31 through a transformer 34. A recording meter 35 is connected to the recorder circuit. A power supply unit 36, controlled by on-off switch 37 serves to supply the necessary operating voltages to the amplifiers 17 and 25.

It will be seen from the illustration that the switches 30 and 31 serve in one position to short-circuit the resistors 32 and 33, and in another position to connect the recorder 13 to the output of the audio amplifier 17. In the first-mentioned or upper position of the switches, the loud-speaker 18 is connected directly to the output of the audio amplifier 17, and the entire audio output of the amplifier is supplied directly to the loud-speaker. In the second or lower position of the switches 30 and 31, the recorder circuit is connected directly to the output of the audio amplifier, and at the same time the loud-speaker is connected to the output of said amplifier through the resistors 32 and 33. In this position of the switches, a predetermined percentage, e. g. twenty-five per-cent, of the audio output is supplied to the loud-speaker, while most of the audio output, e. g. seventy-five percent, is supplied to the recorder. The reduction of the output supplied to the loud-speaker is due to the fact that the resistors 32 and 33 limit the current supplied to the loud-speaker. The purpose of this arrangement will be described presently.

If desired, the switch 13*a* which controls the driving motor for the recorder 13 may be ganged with the switches 30 and 31 so that only one manual operation is necessary to condition the apparatus for recording.

As hereinbefore mentioned, an important object of the present invention is to provide an improved method and apparatus for the recording of piano music. With the switch 23 closed, and with switches 30 and 31 in the recording position, physical vibrations of the piano sounding board 21 are translated directly into an electrical signal which is amplified and supplied to the recorder. This method of recording is a vast improvement over the microphone method heretofore used. The pickups are individually adjustable as to volume of their outputs by means of the potentiometers 24. This is particularly advantageous if the pickups are arranged to respond predominantly to vibrations of different frequencies, e. g. treble and bass. During the recording operation, the volume may be controlled by either of the devices 28 and 29. With the switches 26 and 27 in the left-hand position, the knee-operated volume control potentiometer 28 is effective. This device is operated by one of the knee levers 19 and 20 (Fig. 1). Thus the person playing the piano can control the amplitude of the signal supplied to the recorder by actuating the knee lever while observing the recording meter. The knee lever may be spring biased toward the zero volume position, and by exerting knee pressure on the lever, the user may control the volume at will. If desired, however, the volume may be adjusted by hand, in which case the switches 26 and 27 will be in the right-hand position and the volume control potentiometer 29 will be effective.

It should be noted that the apparatus as thus far described is also adapted to function as an amplified piano. With switch 23 closed and with switches 30 and 31 in the upper position, the vibrations of the piano sounding board 21 are translated into an electrical signal which is amplified and translated into sound possessing natural piano tone. In this case also the volume may be controlled as above described.

As shown in Fig. 2, the system is further arranged for use of the phonograph 14 and the radio receiver equipment 15, and a microphone 38 is also preferably provided. The provision of these devices greatly increases the capabilities of the apparatus, as will be seen presently.

The microphone 38 is connected through a volume control potentiometer 39 and through a switch 40 to the input of the pre-amplifier 25. Not only does the microphone make possible the recording of voice with or without accompaniment, but it enables recording of piano by a combination of the microphone method and the method of the present invention, utilizing a common amplifier for both. While the microphone method is not entirely satisfactory when used alone, it may be used to advantage in combination with the pickup method of the present invention where the acoustics of the room do not seriously interfere.

The outputs of the phonograph 14 and the radio receiver equipment 15 are connected to a selector switch 41, which in turn is connected to a double-throw switch 42, the latter being ganged with a second switch 43. Knee-operated and hand-operated volume control potentiometers 44 and 45 are connected as shown to the switches 42 and 43 for selective inclusion in the circuit. The device 44 is actuated by one of the knee levers 19 and 20 in Fig. 1. The switch 43 is connected to the input of the audio amplifier 17 which serves as a common audio amplifier for the various instrumentalities. The necessary power is supplied to the phonograph 14 and the radio receiver equipment 15 from the power supply 36 through on-off switches 46 and 47.

By means of the additional instrumentalities, the system is adapted for various uses in addition to the recording and reproduction of piano music. Thus, the piano may be utilized alone, either for recording or reproduction, or it may be used in combination with the other devices. For example, the piano may be played as an accompaniment to a phonograph record, either for reproduction or recording. In this connection, it should be noted that there are available phonograph records of piano-orchestra concertos and the like in which the piano part is omitted purposely so that the missing piano part may be played by the pianist. The present system is well adapted for the use of such recordings. The use of knee controls enables accurate control by the user while playing the piano, either during reproduction or recording.

During recording of voice, radio or phonograph, alone or in combination with each other or with piano, the loud speaker 18 serves as an audible indicator, without causing mechanical feedback to the recorder. As described above, during recording a relatively small percentage of the out-

put of audio amplifier 47 is supplied to the loud speaker, and the reduced sound output of the loud speaker provides low but audible reproduction of voice, radio program or phonograph rendition being recorded. At the same time, this audible reproduction is insufficient to cause mechanical feedback to the recorder cutter head. Thus loud voice, radio or phonograph passages are reproduced at low audible level without causing mechanical feedback, for example when playing in conjunction with the piano in concerto style. Moreover the microphone control may be set for high volume without causing howling due to acoustic feedback between the loud speaker and the microphone, thus permitting recording at high volume without recording any extraneous howling effects. Furthermore, with respect to piano the large reduction in output of the loud speaker likewise prevents mechanical feedback to recorder.

The system as illustrated provided a wide variety of ways in which a recording may be made. These are as follows:

1. Piano may be recorded by the pickup method alone utilizing either hand or knee-operated volume control.

2. Piano may be recorded by a combination of the pickup and microphone methods utilizing either hand or knee-operated volume control.

3. Piano and either radio or phonograph may be recorded, utilizing the pickup method alone for piano, and utilizing either hand or knee-operated volume control for piano and for radio or phonograph.

4. Piano and either radio or phonograph may be recorded, utilizing a combination of the pickup and microphone methods for piano.

5. The microphone may be utilized to record voice alone or to record voice in combination with any of the other instrumentalities, utilizing hand or knee-operated volume control.

6. Radio or phonograph may be recorded alone, utilizing either hand or knee-operated volume control.

The various instrumentalities and volume controls actually provide fourteen ways in which a recording may be made.

The composite instrument provided by this invention is useful in a variety of places and for a variety of purposes. Thus, it is useful in the home, in places of entertainment, in educational institutions, etc. For some uses, it may be desirable to provide for coin-controlled use of the instrument at certain times. As shown in Fig. 2, a conventional coin-control mechanism 48 may be connected in the manner indicated, the switch 37 being a double-throw switch which may be placed in either position. When placed in the right-hand position, this switch will include the coin mechanism so that the instrument can be used only by insertion of a coin to close a switch in the coin mechanism.

A further feature of the invention resides in the pick-up arrangement and mounting shown in Fig. 3. A portion of the sounding board 49 adjacent the pick-up 50 is covered with a layer 51 of acoustically absorptive soft material such as felt. This arrangement materially affects the action of the pick-up and provides improved tonal quality. The result is the production of a predominantly pronounced fundamental with less corroborating harmonics related to this fundamental, and also the lessening of prolongation of the point of decadence. The system and pick-up arrangement provide a very flexible means for obtaining the most natural piano tone by selectively mixing the frequencies and amplitudes of the pick-ups.

As shown in Fig. 3, the pick-ups 50 and 52 are firmly held respectively against the layer 51 and the sounding board 49 by means of rigid brackets 53 and 54 secured to the piano posts 55, 56 and 57 and carrying adjustable screws 58 and 59 which engage disks 60 and 61. Each of the pick-ups is enclosed in a resilient rubber housing 62 or 63 against which the disk 60 or 61 bears to hold the pick-up firmly in place. In operation the pick-up armature is actuated by the sounding board, while the rubber housing holds the pick-up in place by virtue of its being compressively held between the board and the backing disk or plate. The housing also serves to protect the pick-up. By virtue of its resiliency the housing does not interfere with the board vibrations.

The above-described mounting of the pick-ups eliminates so-called "wows" which have been encountered with prior types of pick-up mountings, especially in notes of long sustaining duration. Furthermore this arrangement enables ready adjustment of frequency. As the screws 58 or 59 are tightened, the pick-up responds increasingly to higher frequencies and decreasingly to lower frequencies. Such adjustment enables selective change of the harmonic structures of the produced sounds, and enables the production of different tone characteristics.

From the foregoing description, it will be seen that the invention provides a novel method and apparatus for piano recording, and it also provides a composite musical instrument which has wide capabilities. It will be understood, of course, that the invention is not limited to the particular embodiment shown but is capable of various modifications and other embodiments.

I claim:

1. In a system for electrically reproducing or recording music of a piano, at least one pick-up on the piano sounding board assembly for translating physical vibrations directly into an electrical signal, means for amplifying said signal, a sound reproducer connected to said amplifying means, resistance means included in circuit with said reproducer, a recorder, and switch means adapted in one position to short circuit said resistance means and in another position to connect said recorder to said amplifying means.

2. In a system adapted for electrical reproducing or recording of piano music, and also adapted for electrical reproducing or recording of radio, phonograph or microphone renditions; pick-up means on the piano sounding board assembly for translating physical vibrations directly into an electrical signal; radio receiving equipment; a phonograph; a microphone; a common audio amplifier; means for selectively connecting said pick-up means, said radio receiving equipment, said phonograph and said microphone to the input of said amplifier; a recorder; a sound reproducer; and means for supplying the audio output of said amplifier either to said recorder or to said reproducer; knee-operated volume control means for controlling the signals from said pick-up means and said microphone; and other knee-operated volume control means for controlling the signals from said radio receiving equipment and said phonograph.

3. In a system adapted for electrical reproducing or recording of piano music, and also adapted for electrical reproducing or recording of radio, phonograph or microphone renditions; pick-up means on the piano sounding board as-

sembly for translating physical vibrations directly into an electrical signal; radio receiving equipment; a phonograph; a microphone; a common audio amplifier; means for selectively connecting said pick-up means, said radio receiving equipment, said phonograph and said microphone to the input of said amplifier; a sound reproducer connected to said amplifier; resistance means included in circuit with said reproducer; a recorder; and switch means adapted in one position to short circuit said resistance means and in another position to connect said recorder to said amplifier.

4. In a piano having a sound board, two selectively adjustable electrical pick-ups mounted in cooperative association with said sound board for picking up mechanical oscillations thereof and converting said oscillations into electrical impulses, means for amplifying said electrical impulses, a sound reproducer connected to said amplifying means, means for mounting one pick-up so as to effect translation of the said mechanical oscillations into their equivalents in electrical impulses, means for damping the mechanical oscillations of a portion of said sound board corresponding to the mounting location of the second pick-up, and means for mounting said second pick-up in cooperative association with said portion of said board so as to respond to the damped oscillations of said portion.

5. In a system adapted for electrical reproduction of piano music, and also adapted for electrical reproduction of phonograph renditions; pick-up means on the piano sounding board assembly for translating physical vibrations directly into an electrical signal; a phonograph; a common audio amplifier; means for selectively connecting said pick-up means and said phonograph to the input of said amplifier; a sound reproducer connected to the output of said amplifier; knee-operated volume control means for controlling the signal from said pick-up means; and other knee-operated volume control means for controlling the signal from said phonograph.

6. In a system adapted for electrical reproduction of piano music, and also adapted for electrical reproduction of phonograph or microphone renditions; pick-up means on the piano sounding board assembly for translating physical vibrations directly into an electrical signal; a phonograph; a microphone; a common audio amplifier; means for selectively connecting said pick-up means, said phonograph and said microphone to the input of said amplifier; a sound reproducer connected to the output of said amplifier; knee-operated volume control means for controlling the signals from said pick-up means and said microphone; and other knee-operated volume control means for controlling the signal from said phonograph.

7. In a system adapted for electrical reproduction of piano music, and also adapted for electrical reproduction of phonograph renditions; at least two pick-ups on the piano sounding board assembly for translating physical vibrations directly into an electrical signal; means for varying the frequency response of each pick-up; a phonograph; a common audio amplifier; means for selectively connecting said pick-ups and said phonograph to the input of said amplifier; a sound reproducer connected to the output of said amplifier; knee-operated volume control means for controlling the signal from said pick-ups; and other knee-operated volume control means for controlling the signal from said phonograph.

8. In a system adapted for electrical reproduction or recording of piano music, and also adapted for electrical reproduction or recording of phonograph renditions; pick-up means on the piano sounding board assembly for translating physical vibrations directly into an electrical signal; a phonograph; a common audio amplifier; means for selectively connecting said pick-up means and said phonograph to the input of said amplifier; a recorder; a sound reproducer; means for supplying the audio output of said amplifier either to said recorder or to said sound reproducer; knee-operated volume control means for controlling the signal from said pick-up means; and other knee-operated volume control means for controlling the signal from said phonograph.

9. In a system adapted for electrical reproduction of piano music, and also adapted for electrical reproduction of phonograph renditions; pick-up means on the piano sounding board assembly for translating physical vibrations directly into an electrical signal; a phonograph; a common audio amplifier; means for selectively connecting said pick-up means and said phonograph to the input of said amplifier; a sound reproducer connected to the output of said amplifier; and knee-operated volume control means for controlling the signal from said phonograph.

10. In a system adapted for electrical reproduction of piano music, and also adapted for electrical reproduction of phonograph renditions; pick-up means on the piano sounding board assembly for translating physical vibrations directly into an electrical signal; a phonograph; a common audio amplifier; means for selectively connecting said pick-up means and said phonograph to the input of said amplifier; a sound reproducer connected to the output of said amplifier; hand-operated volume control means; knee-operated volume control means, and means for connecting either of said volume control means in circuit between said phonograph and said amplifier for control of the amplitude of the signal from said phonograph.

11. In a system adapted for electrical reproduction of piano music; pick-up means on the piano sounding board assembly for translating physical vibrations directly into an electrical signal; an audio amplifier; means for connecting said pick-up means to the input of said amplifier; a sound reproducer connected to the output of said amplifier; hand-operated volume control means; knee-operated volume control means; and means for connecting either of said volume control means in circuit with said pick-up means and said amplifier for control of the amplitude of said signal.

12. In a system adapted for electrical reproduction of piano music; pick-up means on the piano sounding board assembly for translating physical vibrations directly into an electrical signal; a microphone; an audio amplifier; means for selectively connecting said pick-up means and said microphone to the input of said amplifier; a sound reproducer connected to the output of said amplifier; hand-operated volume control means; knee-operated volume control means; and means for connecting either of said volume control means in circuit with said pick-up means, said microphone and said amplifier for control of the amplitudes of the signals from said pick-up means and said microphone.

13. In a system adapted for electrical reproducing or recording of piano music, and also

adapted for electrical reproducing or recording of phonograph renditions; pick-up means on the piano sounding board assembly for translating physical vibrations directly into an electrical signal; a phonograph; a common audio amplifier; means for selectively connecting said pick-up means and said phonograph to the input of said amplifier; a sound reproducer connected to the output of said amplifier; resistance means included in circuit with said reproducer; a recorder; and switch means adapted in one position to short circuit said resistance means and in another position to connect said recorder to said amplifier.

14. In a system adapted for electrical reproduction of piano music; at least two pick-ups on the piano sounding board assembly for translating physical vibrations directly into an electrical signal; an audio amplifier having its input connected to said pick-ups; a sound reproducer connected to the output of said amplifier; means for varying the frequency response of each pick-up; and knee-operated volume control means for controlling the signal from said pick-ups.

LOUIS LUBEROFF.

REFERENCES CITED

The following references are of record in the file of this patent:

UNITED STATES PATENTS

Number	Name	Date
260,214	Mason et al.	June 27, 1882
1,616,416	Fessenden	Feb. 1, 1927
1,689,524	Fortin	Oct. 30, 1928
1,863,841	Fessenden	June 21, 1932
1,893,895	Hammond	Jan. 10, 1933
1,915,858	Miessner	June 27, 1933
1,994,889	Hammond	Mar. 19, 1935
2,001,724	Hammond	May 21, 1935
2,028,630	Stark	Jan. 21, 1936
2,038,995	Hammond	Apr. 28, 1936
2,073,071	Nernst	Mar. 9, 1937
2,201,232	Helberger	May 21, 1941
2,239,042	Kleber	Apr. 22, 1941
2,307,454	Demuth	Jan. 5, 1943
2,323,232	Miessner	June 29, 1943
2,334,744	Benioff	Nov. 23, 1943