May 31, 1960 R. O. ROBINSON, JR 2,939,130

DIPOLE RADIO SONDE

Filed Feb. 29, 1952 3 Sheets-Sheet 1

FIG. 1.

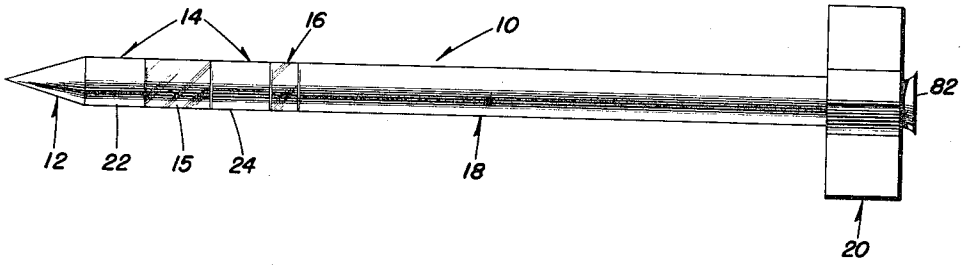

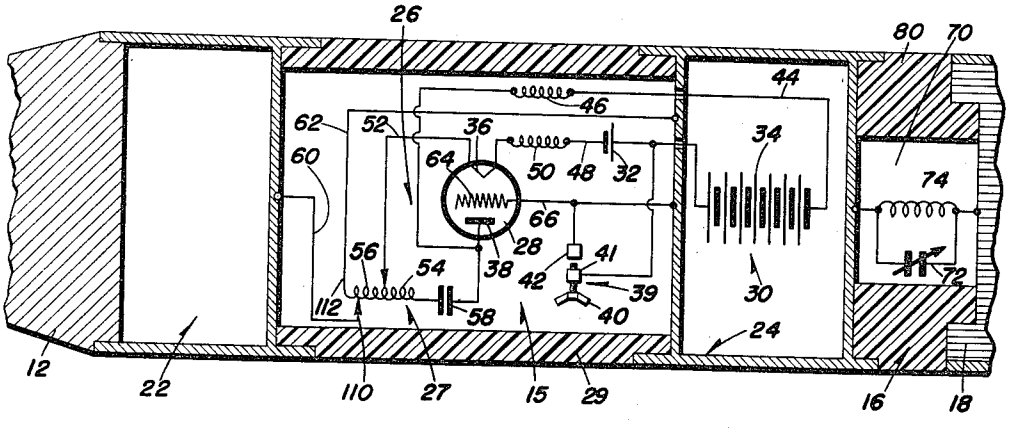

FIG. 2.

INVENTOR.
RALPH O. ROBINSON, JR.
BY G. D. O'Brien

ATTORNEY

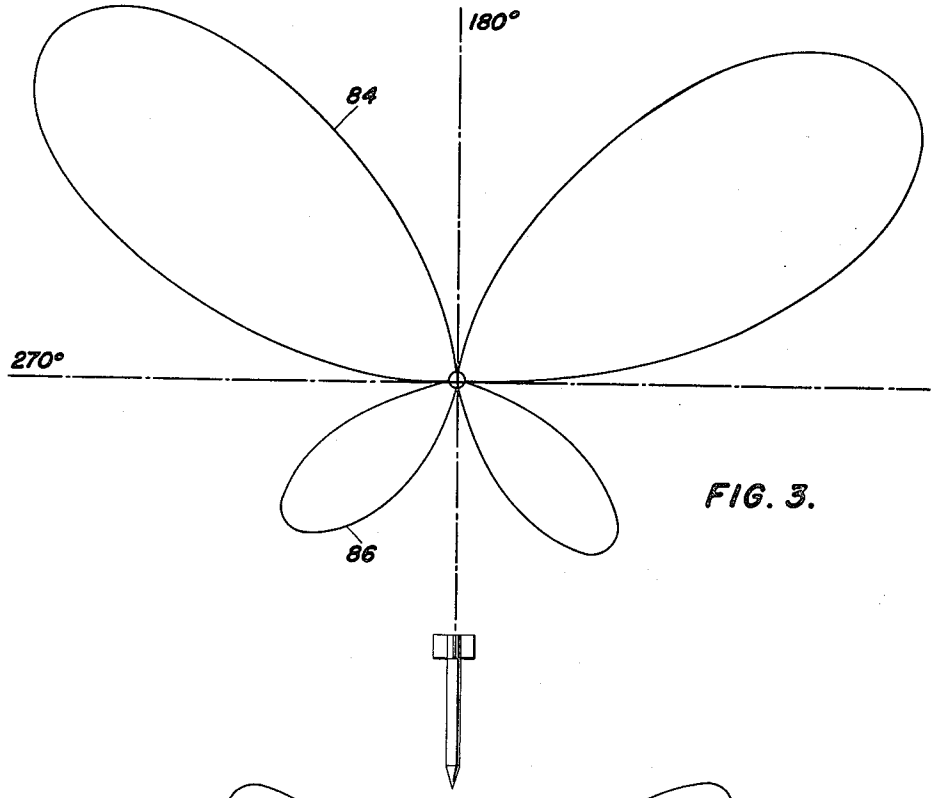

FIG. 3.

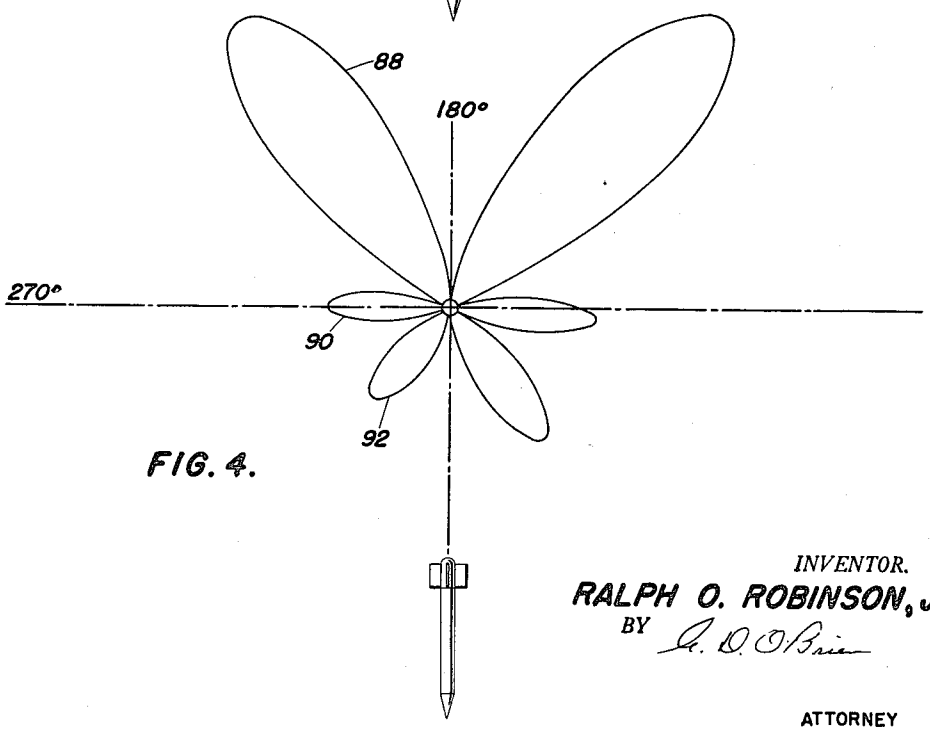

FIG. 4.

INVENTOR.
RALPH O. ROBINSON, JR.
BY G. D. O'Brien
ATTORNEY

DIPOLE RADIO SONDE

Filed Feb. 29, 1952

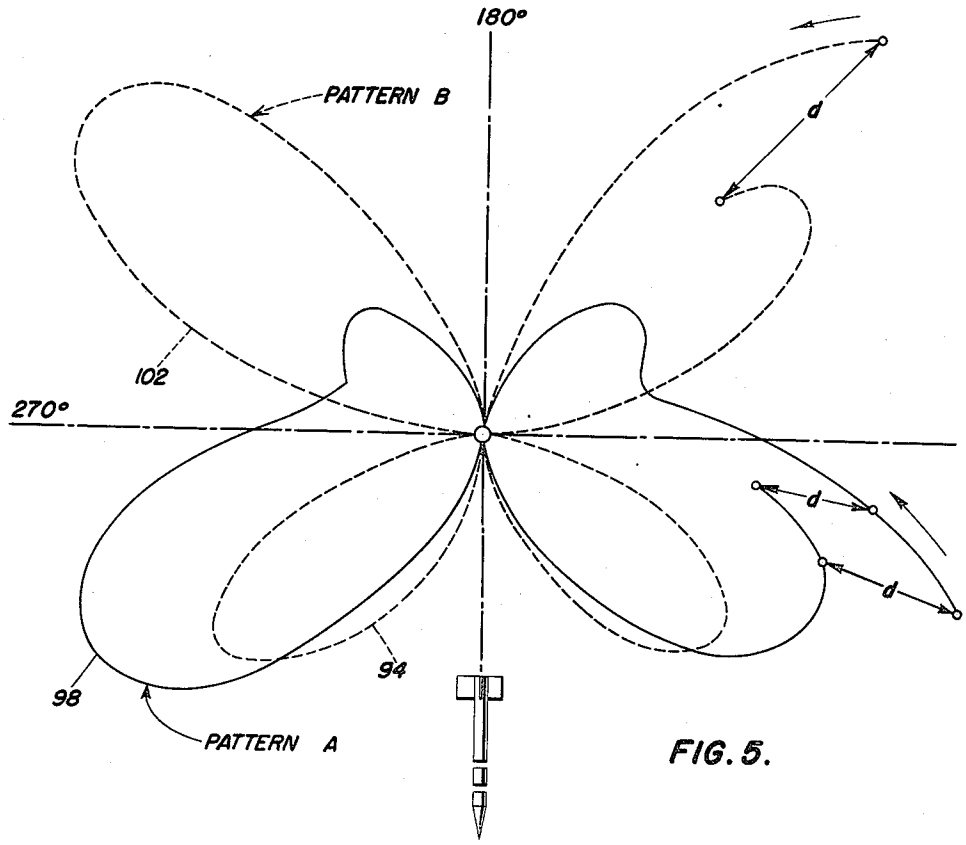

FIG. 5.

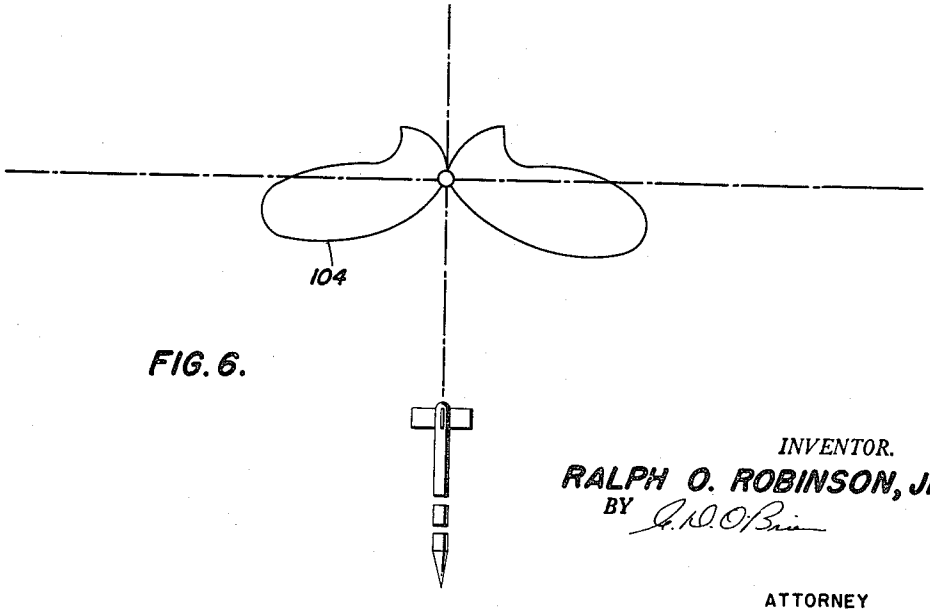

FIG. 6.

INVENTOR.
RALPH O. ROBINSON, JR.
BY G. D. O'Brien
ATTORNEY

United States Patent Office

2,939,130

Patented May 31, 1960

1

2,939,130

DIPOLE RADIO SONDE

Ralph O. Robinson, Jr., Silver Spring, Md., assignor to the United States of America as represented by the Secretary of the Navy

Filed Feb. 29, 1952, Ser. No. 274,110

15 Claims. (Cl. 343—7)

The present invention relates generally to radio sondes, and more particularly to electromagnetic wave radiating systems and apparatus of the radio proximity fuze type, for missiles, such as rockets. The invention is particularly useful in, but not limited in application to, non-rotating fin stabilized rockets.

Radio sondes (radio sonde being a term used to generally designate electromagnetic wave radiating devices, especially such devices as are employed in aerial missiles and projectiles) of the radio proximity fuze type have been known for some time. This invention relates to improvements in such sondes.

Mathematical calculations based on data obtained from experimental studies made at very high frequencies with radio sondes having dipole antennae and attached to fin stabilized rockets have indicated the presence of objectionable multi-lobe radiation patterns at the desired sonde oscillator frequencies. It is believed that these undesirable radiation patterns are due to the presence of the rocket body.

It is one of the principal objects of the present invention, therefore, to provide a radiating system and apparatus for use with missiles, such as rockets and projectiles, which will generate a radiation pattern unaffected by the presence of the body of the missile in the electrical field.

Another object of the invention is to provide a radiating system and apparatus for a projectile which will greatly minimize multi-lobe radiation patterns at the desired sonde oscillator frequencies.

To accomplish the reduction of multi-lobe radiation by the provision of means constituted by a resonant circuit adjusted to present a high impedance to radio frequency currents flowing from the innermost end of the dipole antenna in the rocket to the body of the rocket, is also another object of the invention.

To provide a radio sonde and dipole antenna arrangement wherein the oscillator components are located between the radiating elements of the dipole, with the radiating element separating insulator, employed serving the dual function of rigidly supporting these elements and mounting the oscillator components so that they will be protected from the atmosphere elements and from mechanical shock due to handling and firing, is still another principal object of this invention.

According to the present invention, a dipole sonde comprising an electric dipole is mounted in the forward part of a projectile and parallel to the axis thereof. A "lobe eliminator" is then connected between the main part of the projectile body and the nearest section of the dipole. By means of this arrangement, the radio frequency currents in the body of the projectile are reduced to an absolute minimum, thus allowing the major portion of the radiation to emanate from the dipole. The dipole sections are so constructed that the oscillator circuitry and its power supply is contained within the antenna itself.

The invention will be described by way of example

2

with reference to the accompanying drawings in which:

Fig. 1 is a plan view, on a reduced scale, of a rocket missile embodying the invention;

Fig. 2 is a enlarged fragmentary axial section of the missile shown in Fig. 1, with a portion thereof containing a circuit diagram of the electrical equipment;

Fig. 3 is a radiation pattern for a high powered radio sonde operating on a given frequency range with conventional nose excitation;

Fig. 4 is a radiation pattern for a high powered radio sonde operating on another frequency range with conventional nose excitation;

Fig. 5 illustrates radiation patterns for a dipole sonde operating on a given frequency range both with and without the lobe eliminator; and

Fig. 6 shows a radiation pattern of another dipole sonde operating on another frequency range and including a lobe eliminator.

Reference is now had to the drawings and the following description for a more detailed understanding of the invention.

In Fig. 1, there is shown a non-rotating, fin stabilized rocket **10** incorporating the invention. It is to be understood, however, that the invention is not limited in use with this type of missile but can be adapted and utilized with other types of missiles as well as having other applications unrelated to the ordnance field, such as permanently installed and mobile antennas.

Rocket **10** comprises a nose section **12**, a dipole sonde **14**, a lobe eliminator section **16**, and the rocket motor section **18**, including the fins **20** for stabilizing the rocket during flight, said rocket motor section constituting the main body of the missile.

The dipole sonde **14** consists of an electric dipole of two sections **22** and **24** mounted in the forward portion of rocket **10**. Each element **22** and **24** of the dipole sonde **14** is approximately 2¼" in diameter and 5½" long in a typical embodiment. This permits the building of the oscillator circuit and its power supply (which will be described presently) within the dipole antenna **14** itself. The dipole antenna **14** is so designed that it will always be much shorter than a half wave length at the transmitted frequency.

Between dipole sections **22** and **24**, as previously pointed out, there is located the oscillator section **15** which contains a conventional oscillator circuit **26**, including the oscillator coil **27** and oscillator tube **28**. The oscillator coil **27** is usually mounted parallel to the axis of the dipole sonde **14**. This oscillator section **15** is housed within a dipole separation polystyrene insulator **29** which extends between dipole sections **22** and **24**, as best illustrated in Fig. 2.

The power supply for the oscillator tube **28** is a conventional proximity fuze dry cell battery **30** which is enclosed within the dipole section **24** of the dipole antenna **14** nearest the rocket motor **18**.

Battery **30** includes two sections **32** and **34**. Section **32** of the battery **30** is used for applying the necessary filament voltage to filament **36** of tube **28**, while battery section **34** is utilized for applying the plate voltage to plate **38** of tube **28**.

The power supply battery **30** is so connected with a switch **39** that when a screw element **40** is screwed into its holder **41** a sufficient distance, electrical contact is made with contact element **42** so as to close the circuit. When the circuit is closed, the plate and filament voltages are applied to the oscillator tube **28**. The plate voltage from battery section **34** is applied to the oscillator tube plate **38** through conductor **44** and a radio frequency choke **46**, while the filament voltage from battery section **32** is applied to filament **36** through conductor **48** and a radio frequency choke **50**. A conductor **52** from the

filament 36 taps into oscillator coil 27 to divide it into two sections, the plate coil section 54 and the grid coil section 56. Oscillator coil 27 usually consists of 2½ turns of number 18 wire, 11/16" diameter and ½" long, but not necessarily limited thereto.

Between plate 38 of the oscillator tube 28 and the plate coil 54 of oscillator coil 27, there is located a stopping or isolating condenser 58 which is utilized to prevent short-circuiting of battery section 32. This condenser is usually of 100 mmf.

The dipole sonde 14 is excited by establishing an oscillating R.-F. potential between sections 22 and 24, said excitation being derived from oscillator coil 27 by means of conductor 60 for section 22 and conductor 62 for section 24. The proper impedance matching is established by location of tap 110 relative to end 112 of coil 27. Grid 64 is connected to section 24 by conductor 66.

As previously pointed out, a lobe eliminator 70 is located in section 16 between dipole section 24 and the main body of the rocket motor section 18. Lobe eliminator 70 consists of a parallel resonant circuit including a variable capacitor 72 and an inductance coil 74. In the present embodiment, capacitor 72 is usually between 2 and 5 mmf. capacity, while coil 74 usually consists of 2½ turns of number 18 wire of 11/16" diameter and ¾" long, although not necessarily limited thereto. Section 16 is insulated from rocket motor section 18 and dipole section 24 by means of a polystyrene insulator 80.

As previously indicated, lobe eliminator 70 is a resonant circuit. This circuit is adjusted to present a high impedance to radio frequencies currents flowing from the dipole section 24 to the body of the rocket motor 18.

The magnitudes of inductance and capacity chosen for the lobe eliminator circuit bear some consideration. The rocket motor body 18 is excited at least in part by the capacity between the electric dipole sections 22 and 24 and the rocket motor body 18. This capacity, in any event, acts as a lumped capacity in shunt with the lobe eliminator 70, and must be considered when determining the magnitudes of the condenser 72 and the inductance coil 74.

By means of the lobe eliminator 70 between the main rocket body 18 and the nearest section 24 of the dipole 14, radio frequency currents in the body of the rocket 10 are reduced to a minimum, thus allowing the major portion of the radiation to emanate from dipole 14.

Radiation patterns measured with conventional nose excitation are shown in Figures 3 and 4. The data was obtained from special high powered sondes built into the fuze cases, and which operated on special frequency ranges. The overall length of the rocket from nose cap 12 to the end of the rocket 82 was about 57½". It will be observed that multi-lobe radiation occurs, as indicated by 84 and 86 of Fig. 3, and 88, 90, and 92 of Fig. 4.

Fig. 5 illustrates two radiation patterns both using a dipole sonde operating on a given frequency range. Pattern A is the pattern in which the lobe eliminator of the type indicated by 70 is employed, and pattern B is for the same sonde but with the lobe eliminator 70 removed.

It will be observed that pattern B is similar to the lobe pattern shown in Fig. 3 except that the front lobe 94 is somewhat longer in pattern B than lobe 86 in Fig. 3. In pattern A, most of the radiation is in a forward direction instead of to the rear as shown by lobe 102 of pattern A. In addition, it is to be noted that a single "butterfly" radiation pattern A replaces the multi-lobe pattern B of Fig. 5, consisting of lobes 94 and 102.

In Fig. 6 there is illustrated a radiation pattern 104 of another dipole sonde operating with a lobe eliminator 70 and at another frequency range. It will be noticed that the maximum radiation is still forward, and that the maximum forward radiation is approximately 75° from the axis of the rocket.

While lobe eliminator 70 has employed a lumped inductance and capacitance, a similar action might be obtained through distributed inductance and capacitance, such as a co-axial quarter wave sleeve section.

The operation of the device should be obvious from the structure described. However, the operation can be summarized, in brief, by saying that upon the closing of the switch 39 by screwing screw element 40 into its holder 41, electrical contact is made with contact element 42 so that the proper voltages are applied to the filament 36 and plate 38 of oscillator tube 28. This is usually done just prior to firing the rocket.

The oscillator tube 28 then generates high frequency radiations which are transmitted by the dipole antenna 14. Lobe eliminator 70 acts as a choke or filter and by presenting a high impedance to any radio frequency currents flowing from the end 24 of the dipole 14 to the body of the rocket motor 18, and thus reduces or minimizes the multi-lobe radiation effect.

Upon the rocket 10 approaching a target, sufficient energy is received from the target to operate a firing circuit, not shown, and thus fire the rocket.

Obviously many modifications and variations of the present invention are possible in the light of the above teachings. It is, therefore, to be understood that, within the scope of the appended claims, the invention may be practiced otherwise than as specifically described.

What is claimed is:

1. In combination, a missile having a nose section and a main body section, a radio frequency circuit for generating high frequency oscillations, a dipole antenna electrically coupled to said radio frequency circuit for radiating said high frequency oscillations from said missile, said antenna being located between said nose section and said main body section and said radio frequency circuit being positioned between the elements of said antenna, and a resonant circuit filter in said missile between one of said antenna elements and said main body section, said filter presenting a high impedance to certain radio frequency emanations from said antenna.

2. The arrangement recited in claim 1, and an insulating means having a chamber therein for receiving said resonant circuit filter, said means being located between said antenna and said main body section.

3. The combination recited in claim 1, wherein the elements of said dipole antenna are cylindrical and of the same diameter as the base of said nose section and the main body section, whereby an uninterrupted outer surface for the missile will be provided.

4. In combination, a missile having a nose section and a main body section, an insulator having a chamber formed therein, a dipole antenna having sections, one of said antenna sections being located between the insulator and said nose section and the other of said antenna sections being disposed between said insulator and the main body section, a radio frequency circuit for generating high frequency oscillations, said radio frequency circuit being mounted within said chamber in said insulator and electrically connected to said antenna sections, and parasitic oscillation suppressing means electrically connected between one of said antenna sections and said main body section.

5. The combination recited in claim 4, wherein said parasitic oscillation suppressing means is constituted by a resonant circuit filter.

6. The combination recited in claim 4, wherein said parasitic suppressing means is constituted by a resonant circuit filter having its components mounted axially within the missile.

7. In a missile having a nose portion and a main body, in combination, a radio frequency circuit in said missile for generating high frequency oscillations, an antenna located in said nose portion and electrically coupled to said radio frequency circuit for radiating said high frequency oscillations, an insulating means having a chamber therein, said means being located between said nose portion and said main body of said missile, and

a filter circuit electrically coupling said antenna with said main body of said missile and contained in said chamber, said filter circuit being adjusted to present a high impedance to certain radio frequency currents flowing from said antenna, whereby parasitic radiation effects of the missile are minimized.

8. In a missile having a nose portion and a main body, in combination, a radio frequency circuit in said missile for generating high frequency oscillations, a dipole sonde consisting of an electric dipole of two sections spaced along the longitudinal axis of said missile and located between said nose portion and said main body and electrically coupled to said radio frequency circuit for radiating said high frequency oscillations, an insulating means having a chamber therein, said means being located between one of said dipole sections and said main body, and a filter circuit electrically coupling said dipole with said main body of said missile and contained in said chamber, said filter circuit being adjusted to present a high impedance to radio frequency currents flowing from said dipole to said main body of said missile, whereby a radiation pattern is generated that is unaffected by the presence of said main body of said missile in the electrical field generated.

9. In a missile having a nose portion and a main body, in combination, a radio frequency circuit in said missile for generating high frequency oscillations, a dipole sonde consisting of an electric dipole of two sections spaced along the longitudinal axis of said missile and located between said nose portion and said main body and electrically coupled to said radio frequency circuit for radiating said high frequency oscillations, an insulating means having a chamber therein, said means being located between one of said dipole sections and said main body, and a resonant circuit filter electrically coupling said dipole with said main body of said missile and contained in said chamber, said resonant circuit being adjusted to present a high impedance to radio frequency currents flowing from said dipole to said main body of said missile, whereby a radiation pattern is generated that is unaffected by the presence of said main body of said missile in the electrical field generated.

10. An arrangement as set forth in claim 9, wherein said radio frequency circuit components are located between the sections of said dipole sonde.

11. In a missile having a nose portion and a main body, in combination, a radio frequency circuit in said missile for generating high frequency oscillations, a dipole sonde consisting of an electric dipole of two sections spaced along the longitudinal axis of said missile and located between said nose portion and said main body and electrically coupled to said radio frequency circuit for radiating said high frequency oscillations, an insulating means having a chamber therein, said means being located between one of said dipole sections and said main body, and a parallel resonant circuit filter electrically coupling said dipole with said main body of said missile and contained in said chamber, said resonant circuit being adjusted to present a high impedance to radio frequency currents flowing from said dipole to said main body of said missile, whereby a radiation pattern is generated that is unaffected by the presence of said main body of said missile in the electrical field generated.

12. In combination, a body having two spaced portions, an insulator having a chamber formed therein, a dipole antenna having sections, one of said antenna sections being located between said insulator and one of said body portions and the other of said antenna sections being disposed between said insulator and the other of said body portions, a radio frequency circuit for generating high frequency oscillations, said radio frequency circuit being contained within said chamber in said insulator and electrically connected to said antenna sections, and parasitic oscillation suppressing means electrically connected between one of said antenna sections and the other of said body portions.

13. In a body having at least two spaced portions, in combination, a radio frequency circuit in said body for generating high frequency oscillations, an antenna located between said body portions and electrically coupled to said radio frequency circuit for radiating said high frequency oscillations, an insulating means having a chamber therein, said means being located between said body portions, and a filter circuit electrically coupling said antenna with one of said body portions and contained in said chamber, said filter circuit being adjusted to present a high impedance to certain radio frequency currents flowing from said antenna, whereby parasitic radiation effects of said body are minimized.

14. In a body having two spaced portions, in combination, a radio frequency circuit in said body for generating high frequency oscillations, a dipole sonde consisting of an electric dipole of two sections spaced along the longitudinal axis of said body and located between said body portions and electrically coupled to said radio frequency circuit for radiating said high frequency oscillations, an insulating means having a chamber therein, said means being located between said body portions, and a filter circuit electrically coupling said dipole with one of said body portions and contained in said chamber, said filter circuit being adjusted to present a high impedance to radio frequency currents flowing from said dipole to one of said body portions, whereby a radiation pattern is generated that is unaffected by the presence of said body in the electrical field generated.

15. In combination, a body having at least two spaced portions, a radio frequency circuit for generating high frequency oscillations, a dipole antenna electrically coupled to said radio frequency circuit for radiating said high frequency oscillations from said body, said antenna being located between said body portions, said radio frequency circuit being positioned between the elements of said antenna, and a resonant circuit filter between one of said antenna elements and one of said body portions, said filter presenting a high impedance to certain radio frequency emanations from said antenna.

References Cited in the file of this patent

UNITED STATES PATENTS

2,127,088	Percival et al.	Aug. 16, 1938
2,297,512	Baeyer	Sept. 29, 1942
2,403,567	Wales	July 9, 1946
2,503,952	Laport	Apr. 11, 1950

FOREIGN PATENTS

585,791	Great Britain	Feb. 25, 1947

OTHER REFERENCES

Huntoon et al.: "Generator-Powered Proximity Fuze," Electronics, Dec. 1945, pp. 98–103 inclusive.