(12) INTERNATIONAL APPLICATION PUBLISHED UNDER THE PATENT COOPERATION TREATY (PCT)

(19) World Intellectual Property Organization
International Bureau

(43) International Publication Date
19 September 2013 (19.09.2013)

WIPO | PCT

(10) International Publication Number
WO 2013/135177 A1

(51) International Patent Classification:
A61B 17/322 (2006.01)

(21) International Application Number:
PCT/CN2013/072555

(22) International Filing Date:
13 March 2013 (13.03.2013)

(25) Filing Language: English

(26) Publication Language: English

(30) Priority Data:
201220096769.4 15 March 2012 (15.03.2012) CN

(71) Applicants: **SHENZHEN BYD AUTO R&D COMPANY LIMITED** [CN/CN]; Part B, 1/F, Bldg#B2, Yucan Industrial Area, Lanzhu Road, Shenzhen Export Processing Zone, Shenzhen Grand Industrial Zone, Shenzhen, Guangdong 518118 (CN). **BYD COMPANY LIMITED** [CN/CN]; No. 3009, BYD Road, Pingshan, Shenzhen, Guangdong 518118 (CN).

(72) Inventors: **WANG, Ruozhou**; No. 3009, BYD Road, Pingshan, Shenzhen, Guangdong 518118 (CN). **TANG, Liuping**; No. 3009, BYD Road, Pingshan, Shenzhen, Guangdong 518118 (CN). **LI, Gang**; No. 3009, BYD Road, Pingshan, Shenzhen, Guangdong 518118 (CN). **GONG, Qing**; No. 3009, BYD Road, Pingshan, Shenzhen, Guangdong 518118 (CN). **LI, Zhihai**; No. 3009, BYD Road, Pingshan, Shenzhen, Guangdong 518118 (CN).

(74) Agent: **TSINGYIHUA INTELLECTUAL PROPERTY LLC**; Room 301, Trade Building, Zhaolanyuan, Tsinghua University, Qinghuayuan, Haidian District, Beijing 100084 (CN).

(81) Designated States *(unless otherwise indicated, for every kind of national protection available)*: AE, AG, AL, AM, AO, AT, AU, AZ, BA, BB, BG, BH, BN, BR, BW, BY, BZ, CA, CH, CL, CN, CO, CR, CU, CZ, DE, DK, DM, DO, DZ, EC, EE, EG, ES, FI, GB, GD, GE, GH, GM, GT, HN, HR, HU, ID, IL, IN, IS, JP, KE, KG, KM, KN, KP, KR, KZ, LA, LC, LK, LR, LS, LT, LU, LY, MA, MD, ME, MG, MK, MN, MW, MX, MY, MZ, NA, NG, NI, NO, NZ, OM, PA, PE, PG, PH, PL, PT, QA, RO, RS, RU, RW, SC, SD, SE, SG, SK, SL, SM, ST, SV, SY, TH, TJ, TM, TN, TR, TT, TZ, UA, UG, US, UZ, VC, VN, ZA, ZM, ZW.

(84) Designated States *(unless otherwise indicated, for every kind of regional protection available)*: ARIPO (BW, GH, GM, KE, LR, LS, MW, MZ, NA, RW, SD, SL, SZ, TZ, UG, ZM, ZW), Eurasian (AM, AZ, BY, KG, KZ, RU, TJ, TM), European (AL, AT, BE, BG, CH, CY, CZ, DE, DK, EE, ES, FI, FR, GB, GR, HR, HU, IE, IS, IT, LT, LU, LV, MC, MK, MT, NL, NO, PL, PT, RO, RS, SE, SI, SK, SM, TR), OAPI (BF, BJ, CF, CG, CI, CM, GA, GN, GQ, GW, ML, MR, NE, SN, TD, TG).

Published:

— *with international search report (Art. 21(3))*

(54) Title: SKIN REMOVING DEVICE

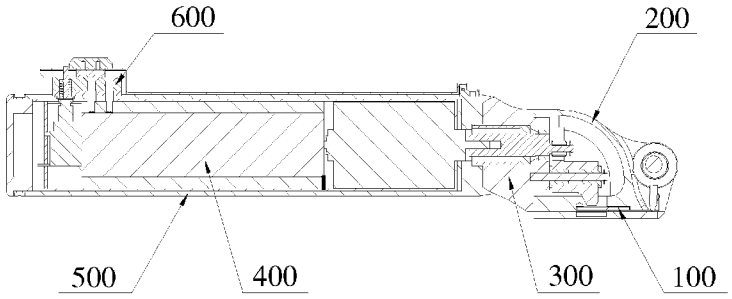

Fig. 1

(57) Abstract: A skin removing device comprises: a cutting assembly adapted to cut skin; an adjusting assembly adapted to adjust a cutting area of the cutting assembly and configured to fixedly couple with the cutting assembly; a handle-switch assembly comprising a handle assembly configured to fixedly couple with a first end of the adjusting assembly, and a switch assembly configured to mount on the handle assembly; a motor-housing assembly adapted to provide a cutting driving force and configured to detachably disposed in the handle assembly; and a connecting assembly adapted to connect the cutting assembly with the motor-housing assembly.

WO 2013/135177 A1

SKIN REMOVING DEVICE

RELATED APPLICATION

This application claims priority to Chinese Patent Application No. 201220096769.4, titled "SKIN REMOVING DEVICE", filed on March 15, 2012, the entire content of which is hereby incorporated by reference.

TECHNICAL FIELD

The present disclosure relates to medical devices, more particularly, to a skin removing device.

BACKGROUND

A skin removing device, for example an electric dermatome, is a general device used for removing and grafting human skin in burn surgeries and plastic surgeries. The skin removing device generally comprises a cutting element and a handle within which a direct current motor is disposed. The motor is connected with the cutting element via a mechanical converting mechanism, and a power connecting base configured to connect to the 220V power source is provided at the trail of the handle. The rotating speed of this type of skin removing device cannot be adjusted. Moreover, the skin removing device applies the 220V alternating current power source, so that it inconvenient for use.

The Chinese utility model application CN200998287Y discloses a rechargeable electric skin removing device, the rotation speed of which can be adjusted. A motor and a speed controlling mechanism used for adjusting the rotating speed of the motor are disposed within the handle of the skin removing device. A rechargeable battery is disposed in the speed controlling mechanism, and an end of the handle is provided with a power jack for connecting with the rechargeable battery. However, the energy in the battery decreases after the battery is used, thus a stable rotating speed of the motor cannot be ensured. In addition, elements of the speed controlling mechanism cannot bear the high temperature steam, so that high temperature disinfection cannot be applied to this type of skin removing devices. In order to disinfect the removing device, a

water-proof treatment and a sealing treatment for the switch and the motor base are required. The life of the sealing structure, however, is limited. Thus, some elements of the skin removing device may be aged or worn after long-term use and several times of disinfection, which may influence the normal operation of the skin removing device. In order to maintain the skin removing device in a good operation condition, the sealing structure needs to be replaced in time.

SUMMARY

The present disclosure seeks to solve at least one of the problems existing in the prior art to at least some extent. To this end, an object of the present disclosure is to provide a skin removing device. The speed of the skin removing device is adjustable, and the skin removing device is convenient for disinfection. Further, no water-proof or sealing treatment is required for the skin removing device.

The skin removing device according to embodiments of the present disclosure comprises: a cutting assembly adapted to cut skin; an adjusting assembly adapted to adjust a cutting area of the cutting assembly and configured to fixedly couple with the cutting assembly; a handle-switch assembly comprising a handle assembly configured to fixedly couple with a first end of the adjusting assembly, and a switch assembly configured to mount on the handle assembly; and a motor-housing assembly adapted to provide a cutting driving force and configured to detachably disposed in the handle assembly; and a connecting assembly adapted to connect the cutting assembly with the motor-housing assembly.

In some embodiments, the motor-housing assembly comprises a housing. A motor, a battery, a button, and an electric circuit are electrically connected in turn and disposed in the housing. The motor has a first end coupled with the cutting assembly via the connecting assembly, and the button has a top end contacted with the switch assembly.

In some embodiments, the connecting assembly comprises a connecting support having a first end coupled with the adjusting assembly and a second end coupled with the handle assembly. An eccentric transmission shaft and a pendulum rod is disposed in the connecting support, and the eccentric transmission shaft has a first end coupled with an output shaft of the motor and a second end coupled with a trail end of the pendulum rod. A head end of the pendulum rod is coupled with the cutting assembly.

In some embodiments, the connecting assembly further comprises a sleeve disposed between the eccentric transmission shaft and the trail end of the pendulum rod, and a pin having a first end coupled with the connecting support and a second end inserted in the pendulum rod.

In some embodiments, the cutting assembly comprises a blade support having a hole therein and a cutting blade disposed on the blade support. The head end of the pendulum rod is fixed into the hole.

In some embodiments, the adjusting assembly comprises: an adjusting body configured to couple with the connecting support; a pressing plate; an adjusting handle; a cover plate disposed at a bottom of the adjusting body and formed with a skin cutting groove, and the cutting blade is disposed between the pressing plate and the cover plate; and an eccentric shaft having a first end coupled with the adjusting handle and a second end mounted on a top of the pressing plate.

In some embodiments, the adjusting assembly further comprises two eccentric adjusting pins disposed at two opposite sides of the pressing plate.

In some embodiments, the handle assembly comprises a handle having a first end fixedly coupled with the connecting support, and an end cover disposed at a second end of the handle and configured to open or close the handle. The motor-housing assembly is disposed in the handle.

In some embodiments, the switch assembly comprises: a switch support configured to couple with the handle, and a protrusion rod and a spring fitted over the protrusion rod being disposed in the switch support; and a switch pressing rod having a first end coupled with the handle and a second end extended to and above an upper end of the switch support and formed with a slide groove. A switch pushing piece and a switch pressing piece are disposed in the slide groove. The protrusion rod has a first end extended into the handle so as to contact with the button, and a second end extended to out of the switch support so as to contact with the switch pressing piece.

In some embodiments, a soft starter for the motor, a voltage regulating module, and a charging module for the battery are disposed on the electric circuit.

In some embodiments, the button is a non-self-locking micro pressing button.

The skin removing device according to embodiments of the present disclosure comprises the motor-housing assembly detachably disposed within the handle assembly, such that the battery in the motor-housing assembly may provide electric power for the skin removing device. When the

power of the battery decreases which lead to the reduction of the rotating speed of the motor, the motor-housing assembly may be detached or removed from the handle assembly, and then the battery in the motor-housing assembly can be replaced or recharged. In that way, sufficient electric power may be provided for the skin removing device, making the use of the skin removing device efficiently and conveniently. Thus, the short or lack of electric power during surgery operations can be efficiently avoided. When the skin removing device is disinfected, the whole motor-housing assembly can be detached or removed from the handle assembly, and then the remaining elements of the skin removing device are disinfected by means of, for example, high temperature. Therefore, the life of the skin removing device as well as elements therein can be ensured, and the times of failure can be reduced. Meanwhile, the manufacture and maintenance of the sealing structure which is commonly applied in the prior art can be avoided.

Additional aspects and advantages of the embodiments of present disclosure will be given in part in the following descriptions, become apparent in part from the following descriptions, or be learned from the practice of the embodiments of the present disclosure.

BRIEF DESCRIPTION OF THE DRAWINGS

These and other aspects and advantages of the disclosure will become apparent and more readily appreciated from the following descriptions made with reference the accompanying drawings, in which:

Fig.1 is a cross-section view of a skin removing device according to an embodiment of the present disclosure;

Fig.2 is a cross-section view of a motor-housing assembly of the skin removing device according to an embodiment of the present disclosure;

Fig.3 is a cross-section view of a connecting assembly of the skin removing device according to an embodiment of the present disclosure;

Fig.4 is a cross-section view of an adjusting assembly of the skin removing device according to an embodiment of the present disclosure;

Fig.5 is a left side, cross-section view of the adjusting assembly of the skin removing device according to an embodiment of the present disclosure;

Fig.6 is a schematic view of the adjusting assembly of the skin removing device according to

an embodiment of the present disclosure;

Fig.7 is a cross-section view of a handle-switch assembly of the skin removing device according to an embodiment of the present disclosure;

Fig.8 is a schematic view of a structure formed with a blade, a pressing plate, and a cover plate of the skin removing device according to an embodiment of the present disclosure; and

Fig.9 is a cross-section of the skin removing device formed without the motor-housing assembly according to an embodiment of the present disclosure.

DETAILED DESCRIPTION

Reference will be made in detail to embodiments of the present disclosure, samples of described embodiments are indicated in the drawings. The same or similar elements and the elements having same or similar functions are denoted by like reference numerals throughout the descriptions. The embodiments described herein with reference to drawings are explanatory, illustrative, and used to generally understand the present disclosure. The embodiments shall not be construed to limit the present disclosure.

In the description, Unless specified or limited otherwise, relative terms such as “central”, “longitudinal”, “lateral”, “front”, “rear”, “right”, “left”, “inner”, “outer”, “lower”, “upper”, “horizontal”, “vertical”, “above”, “below”, “up”, “top”, “bottom” as well as derivative thereof (e.g., “horizontally”, “downwardly”, “upwardly”, etc.) should be construed to refer to the orientation as then described or as shown in the drawings under discussion. These relative terms are for convenience of description and do not require that the present disclosure be constructed or operated in a particular orientation.

In the present application, terms such as "first" and "second" are used herein for purposes of description and are not intended to indicate or imply relative importance or significance. Term “plurality” can be understood as two or more than two, unless expressly described otherwise.

Unless specified or limited otherwise, the terms "mounted," "connected," "coupled," and "secured" and variations thereof are used broadly, such as rigid attachments, also movable attachments, or integrated attachments; mechanical connections, also refer to a relationship wherein structures are secured or attached to one another either directly or indirectly through intervening structures, or structures having their interiors connected. As to those skilled in the art,

specific meaning of the above mentioned terms in the present disclosure can be understood in accordance with specific conditions.

A skin removing device according to embodiments of the present disclosure will be described with reference to Figs.1-9.

As shown in Fig.1, the skin removing device according to embodiments of the present disclosure may comprise: a cutting assembly 100 adapted to cut skin, an adjusting assembly 200 adapted to adjust a cutting area so as to obtain different size of skin, a connecting assembly 300, a motor-housing assembly 400, and a handle-switch assembly. The handle-switch assembly provides a gripping and controlling area for users. Users may hold the handle-switch assembly in hand and control the operation the skin removing device.

According to embodiments of the present disclosure, the adjusting assembly 200 is configured to fixedly couple with the cutting assembly 100. The handle-switch assembly comprises a handle assembly 500 configured to fix on a first end of the adjusting assembly 200, and a switch assembly 600 configured to mount on the handle assembly 500.

According to embodiments of the present disclosure, the motor-housing assembly 400 may be configured to movably or detachably dispose in the handle assembly 500. In other words, the motor-housing assembly 400 may be moved out from or inserted in the handle assembly 500 as a whole.

According to embodiments of the present disclosure, the connecting assembly 300 may be configured to connect the cutting assembly 100 with the motor-housing assembly 400. In other words, the motor-housing assembly 400 is coupled with the cutting assembly 100 via the connecting assembly 300.

According to embodiments of the present disclosure, the motor-housing assembly 400 further contains a power source therein, so that the motor-housing assembly 400 may provide a driving force for the skin removing device. As shown in Fig. 2, the motor-housing assembly 400 comprises a housing 4. In an embodiment, the housing may be a sleeve element. A motor 5, a battery 1, a button 3 and an electric circuit 2 are electrically connected in turn and disposed in the housing 4. The motor 5 has a first end coupled with the cutting assembly 100 via the connecting assembly 300, and the button 3 has a top end contacted with the switch assembly 600.

According to embodiments of the present disclosure, the connecting assembly 300 is adapted

for connecting adjacent elements and transmiting force or power therebetween. As shwon in Fig. 3, the connecting assembly 300 comprises a connecting support 6. The connecting support 6 can be formed as an integral, and has a first end coupled with the adjusting assembly 200 and a second end coupled with the handle assembly 500. An eccentric transmission shaft 10 and a pendulum rod 8 is disposed in the connecting support 6. The eccentric transmission shaft 10 has a first end coupled with an output shaft of the motor 5, and a second end coupled with a trail end of the pendulum rod 8. A first end of the output shaft of the motor 5 is coupled with a cutting blade 17 (will be described below in detail) of the cutting assembly 100 via the eccentric transmitting shaft 10 and the pendulum rod 8. The head end of the pendulum rod 8 is coupled with the cutting assembly 100. In that way, when the skin removing device is connected with an electric power, the motor 5 drives the eccentric transmission shaft 10 to rotate with a high speed, as the tail end of the pendulum rod 8 is coupled with the eccentric transmission shaft 10, the pendulum rod 8 is driven to make a reciprocating motion and the cross section of the motion area has a shape of sector. Thus, with the connecting assembly 300, the rotation force of the motor 5 may be transmitted to the pendulum rod 8, resulting a sector-shaped reciprocating motion of the pendulum rod 8.

According to embodiments of the present disclosure, the connecting assembly 300 further comprises a sleeve 7 disposed between the eccentric transmission shaft 10 and the trail end of the pendulum rod 8, and a pin 9 having a first end fixedly coupled with the connecting support 6 and a second end inserted in the pendulum rod 8. As shown in Fig. 3, with the sleeve 7, during the sector-shaped reciprocating motion of the pendulum rod 8 which is driven by the eccentric transmission shaft 10, the pendulum rod 8 is moved with the pin 9 as a center, so that the friction between the eccentric transmission shaft 10 and the pendulum rod 8 can be reduced.

According to embodiments of the present disclosure, the cutting assembly 100 may be used for cutting human skin. As shown in Fig.6, the cutting assembly comprises a blade support 19 and a cutting blade 17 disposed on the blade support 19. The blade support 19 has a hole therein, and the head end of the pendulum rod 8 is fixed into the hole. In an embodiment, the blade support 19 and the cutting blade 17 may be connected by any known method in the art, such as connecting via a plastic pin 18, without special limits in the present disclosure. When the pendulum rod 8 is driven to make the sector-shaped reciprocating motion, the cutting assembly 100 (i.e. comprising

the whole of the blade support 19 and the blade 17) is driven to make a linear reciprocating motion in the lateral direction, in order to achieve skin-cutting. According to embodiments of the present disclosure, for the sector-shaped reciprocating motion of the pendulum rod 8, the head end of the pendulum rod 8 may move upwardly and downwardly slightly. In some embodiment, a gap may be maintained between the head of the pendulum rod 8 and the cutting assembly 100. With the gap, the up and down movement of the pendulum rod 8 may not press or contact with the cutting assembly 100, further the deformation of the cutting assembly 100 caused by the pressing or contacting may be avoided.

According to embodiments of the present disclosure, the adjusting assembly 200 may be used for adjusting the size of the cutting area, further, a thickness of the cut skin can be adjusted by the adjusting assembly 200. As shown Figs. 4 and 5, the adjusting assembly 200 comprises: an adjusting body 13, a pressing plate 15, an adjusting handle 11, a cover plate 16 disposed at a bottom of the adjusting body 13, and an eccentric shaft 12. The adjusting body 13 is configured to fixedly couple with the connecting support so as to fixedly connect the adjusting assembly 200 with the cutting assembly 100. The cutting blade 17 is disposed between the pressing plate 15 and the cover plate 16. The cover plate 16 is formed with a skin cutting groove from which at least a part of the cutting blade 17 is exposed. A width of the skin cutting groove may equal to the width of the cut skin. Thus, the size, such as the width of the cut skin can be adjusted by means of applying the cover plates 16 having different size (for example, the width) skin cutting grooves. In some embodiments, the cover plate 16 is of ordinary type in the art, for example, the skin cutting groove in the cover plate 16 may have a width of at least one selected from a group consisting of: 1 inch, 1.5 inches, 2 inches, 3 inches, and 4 inches.

In some embodiments, the eccentric shaft 12 has a first end coupled with the adjusting handle 11 and a second end mounted on a top of the pressing plate 15. As the adjusting handle 11 is rotated, with the eccentric shaft 12, a rotation of the adjusting handle 11 may drive the eccentric shaft 12 to make a sector-shaped motion, which generates a pressure on the pressing plate 15. In that way, the pressing plate 15 may move upwardly and downwardly, adjusting the gap or distance between the pressing plate 15 and the cutting blade 17. The gap or distance between the pressing plate 15 and the cutting blade 17 may be regarded as the thickness of the cut skin. As described above, with the adjusting handle 11 according to embodiments of the present

disclosure, skin with different thicknesses can be obtained. In some embodiments, the adjusting handle 11 is formed with a scale line (not shown). Thus, the thickness of the cut skin can be controlled precisely.

In some embodiments, the operation of the skin removing device comprises the following steps: placing the skin removing device on the skin, the angle between the skin removing device and the skin being between 30 degrees to 45 degrees; pressing the switch assembly 600 of the skin removing device; and moving the skin removing device along the skin. The skin is elastic and may pass through the skin cutting groove in the cover plate 16 and reach the cutting blade 17. When the skin removing device is moved along the skin, the cutting blade 17 may keep on contacting with the skin, and in that way, skin may be removed or cut. The removed skin may pass through the gap between the cutting blade 17 and the pressing plate 15, then stretch out along the curved front edge of the cutting blade 17, and then the removed skin can be obtained by a plier.

According to embodiments of the present disclosure, as shown in Fig. 5, the adjusting assembly 200 further comprises two eccentric adjusting pins 14. The two eccentric adjusting pins 14 are disposed at two opposite sides of the pressing plate 15. In that way, a deflexion of the pressing plate 15 which may be caused by the pressure on the eccentric shaft 12 can be effectively avoided.

According to embodiments of the present disclosure, the handle assembly 500 comprises a handle 22, and an end cover 28 mounted on a second end of the handle and configured to open or close the handle. The handle 22 has a first end fixedly coupled with the connecting support 6, so as to fixedly couple the handle assembly 500. The end cover 28 is disposed at the second end of the handle 22, and the handle assembly 500 can be opened or closed via the end cover 28. As shown in Fig. 1, the motor-housing assembly 400 is disposed in the handle 22. When the skin removing device needs to be recharged or disinfected, the handle assembly 400 may be opened by removing the end cover 28, then the motor-housing assembly 400 may be taken out of the handle assembly 400 and recharged, while the remaining elements of the skin removing device may be disinfected. After the step of recharging or disinfecting, the motor-housing assembly 400 may be inserted into the handle 22, and the end cover 28 is closed to seal the handle 22.

According to embodiments of the present disclosure, as shown in Fig. 7, the switch assembly

600 comprises a switch support 25 and a switch pressing rod 23. The switch support 25 is configured to fixedly couple with the handle 22, and a protrusion rod 27 and a spring 26 fitted over the protrusion rod 27 are disposed in the switch support 25. The switch pressing rod 23 has a first end coupled with the handle 22, and a second end extended to and above an upper end of the switch support 25. The second end of the switch pressing rod 23 is formed with a slide groove. A switch pushing piece 21 and a switch pressing piece 20 are disposed in the slide groove. The switch pushing piece 21 may be provided with two or more pushing positions according to actual demands, without special limit in the present disclosure.

In some embodiments, the protrusion rod 27 has a first end extended into the handle 22 so as to contact with the button 3, and a second end extended to out of the switch support 25 so as to contact with the switch pressing piece 20. In some embodiments, as shown in Fig. 7, the switch support 25 may further comprise an upper cover 24. The upper cover 24 may prevent the spring 26 from moving out of the switch support 25.

In some embodiments, the upper end of the button 3 is contacted with the lower end of the protrusion rod 27 of the switch assembly 600. When the switch assembly 600 is not pressed, the protrusion rod 27 is hold by the spring 26 so that the button 3 is not subjected to a pressing force, thus the motor 5 is not connected with the power source and the skin removing device is in s non-operation condition. A process of cutting or removing skin using the present skin removing device may comprise the steps of: the pushing plate 21 is pushed onto the upper end of the switch support 25, to contact the pressing plate 20 with the protrusion rod 27; the handle 22 and the switch pressing rod 23 are held by hand, then the pressing plate 20 may move downwardly and press the protrusion rod 27; the button 3 is pressed to operate the skin removing device. During the skin-removing process, the operation and stop of the skin removing device may be controlled by adjusting the holding force that users applied on the switch pressing rod 23. When the holding force is reduced, the switch pressing rod 23 is relaxed, thus the protrusion rod 27 may be pushed up by the spring 26, causing no outside pressing force on the button 3. In that way, the operation of the skin removing device may be stopped. When the holding force over the switch pressing rod 23 is increased, the skin removing device may be operated.

In some embodiments, an end portion of the switch pressing rod 23 is formed with a slide groove. When the skin removing device is not in an operation state, the switch pushing piece 21

is pushed forward to drive the pressing plate 20 moving forward, in order to prevent the switch pressing piece 20 from contacting with the protrusion rod 27. In this condition, even the switch pressing rod 23 is hold tightly with the hand, the switch pressing piece 20 may not contact or attach with the protrusion rod 27. Thus, there may be no pressing force on the button 3, and the electric circuit is in a disconnection condition, thus preventing the skin removing device from initiating or operation.

According to embodiments of the present disclosure, a soft starter for the motor 5, a voltage regulating module, and a charging module for the battery 1 are disposed on the electric circuit 2. The battery 1 may be regarded as a power source and provide an electric power to the skin removing device. The electric circuit 2 may drive the motor 5, and the start or stop of the motor 5 may be controlled by the button 3.

According to embodiments of the present disclosure, the button 3 is a non-self-locking micro pressing button. In other words, the button 3 may disconnect the electric circuit 2 without outside pressing force, and may connect the electric circuit 2 when pressed by a pressing force. When the pressing force applied on the button 3 is removed, the button may recover to the initial or original condition automatically, thus disconnecting the electric circuit 2. In some embodiments, the pressing force applied on the button 3 may be provided and controlled by the handle-switch assembly.

Reference throughout this specification to "an embodiment," "some embodiments," "one embodiment", "another example," "an example," "a specific examples," or "some examples," means that a particular feature, structure, material, or characteristic described in connection with the embodiment or example is included in at least one embodiment or example of the disclosure. Thus, the appearances of the phrases such as "in some embodiments," "in one embodiment", "in an embodiment", "in another example, "in an example," "in a specific examples," or "in some examples," in various places throughout this specification are not necessarily referring to the same embodiment or example of the disclosure. Furthermore, the particular features, structures, materials, or characteristics may be combined in any suitable manner in one or more embodiments or examples.

Although explanatory embodiments have been shown and described, it would be appreciated by those skilled in the art that changes, alternatives, and modifications can be made in the

embodiments without departing from spirit and principles of the disclosure. Such changes, alternatives, and modifications all fall into the scope of the claims and their equivalents.

WHAT IS CLAIMED IS:

1. A skin removing device comprising:

a cutting assembly adapted to cut skin;

an adjusting assembly adapted to adjust a cutting area of the cutting assembly and configured to fixedly couple with the cutting assembly;

a handle-switch assembly comprising a handle assembly configured to fixedly couple with a first end of the adjusting assembly, and a switch assembly configured to mount on the handle assembly;

a motor-housing assembly adapted to provide a cutting driving force and configured to detachably disposed in the handle assembly; and

a connecting assembly adapted to connect the cutting assembly with the motor-housing assembly.

2. The skin removing device according to claim 1, wherein the motor-housing assembly comprises a housing,

wherein a motor, a battery, a button and an electric circuit are electrically connected in turn and disposed in the housing,

wherein the motor has a first end coupled with the cutting assembly via the connecting assembly, and the button has a top end contacted with the switch assembly.

3. The skin removing device according to claim 2, wherein the connecting assembly comprises a connecting support having a first end coupled with the adjusting assembly and a second end coupled with the handle assembly,

wherein an eccentric transmission shaft and a pendulum rod is disposed in the connecting support,

wherein the eccentric transmission shaft has a first end coupled with an output shaft of the motor and a second end coupled with a trail end of the pendulum rod, and a head end of the pendulum rod is coupled with the cutting assembly.

4. The skin removing device according to claim 3, wherein the connecting assembly further comprises:

a sleeve disposed between the eccentric transmission shaft and the trail end of the pendulum rod, and

a pin having a first end coupled with the connecting support and a second end inserted in the pendulum rod.

5. The skin removing device according to claim 3, wherein the cutting assembly comprises:

a blade support having a hole into which the head end of the pendulum rod is fixed, and

a cutting blade disposed on the blade support.

6. The skin removing device according to claim 5, wherein the adjusting assembly comprises:

an adjusting body configured to couple with the connecting support;

an adjusting handle;

a pressing plate;

a cover plate disposed at a bottom of the adjusting body and formed with a skin cutting groove, and the cutting blade being disposed between the pressing plate and the cover plate; and

an eccentric shaft having a first end coupled with the adjusting handle and a second end mounted on a top of the pressing plate.

7. The skin removing device according to claim 6, wherein the adjusting assembly further comprises two eccentric adjusting pins disposed at two opposite sides of the pressing plate.

8. The skin removing device according to claim 3, wherein the handle assembly comprises:

a handle having a first end fixedly coupled with the connecting support, the motor-housing assembly being disposed in the handle, and

an end cover disposed at a second end of the handle and configured to open or close the handle.

9. The skin removing device according to claim 8, wherein the switch assembly comprises:

a switch support configured to couple with the handle, and a protrusion rod and a spring fitted over the protrusion rod being disposed in the switch support, and

a switch pressing rod having a first end coupled with the handle, and a second end extended to and above an upper end of the switch support and formed with a slide groove,

wherein a switch pushing piece and a switch pressing piece are disposed in the slide groove,

wherein the protrusion rod having a first end extended into the handle so as to contact with the button and a second end extended out of the switch support so as to contact with the switch pressing piece.

10. The skin removing device according to claim 2, wherein a soft starter for the motor, a voltage regulating module, and a charging module for the battery are disposed on the electric circuit.

11. The skin removing device according to claim 2, wherein the button is a non-self-locking micro pressing button.

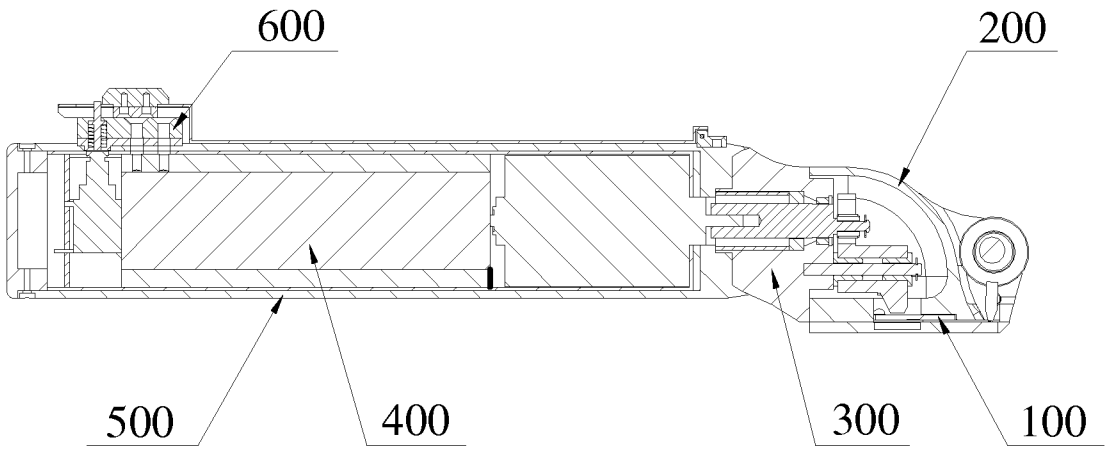

Fig. 1

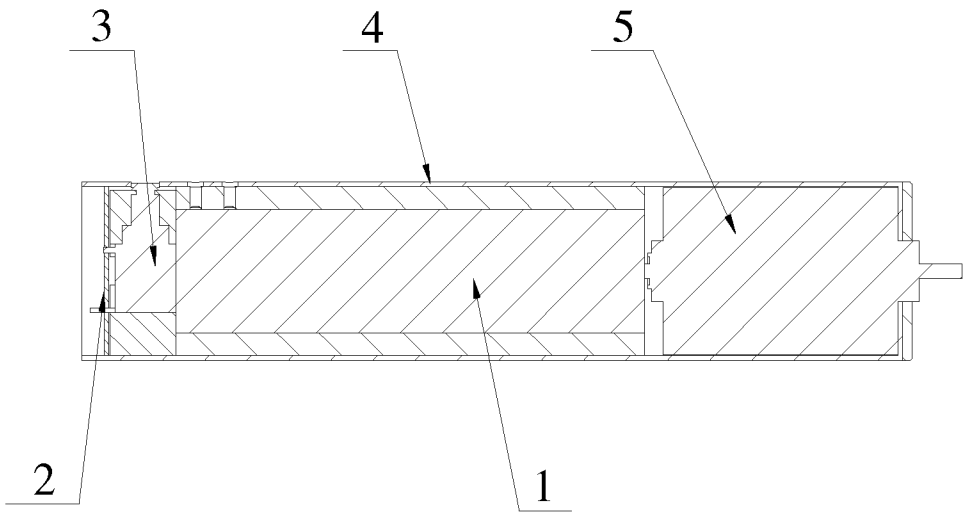

Fig. 2

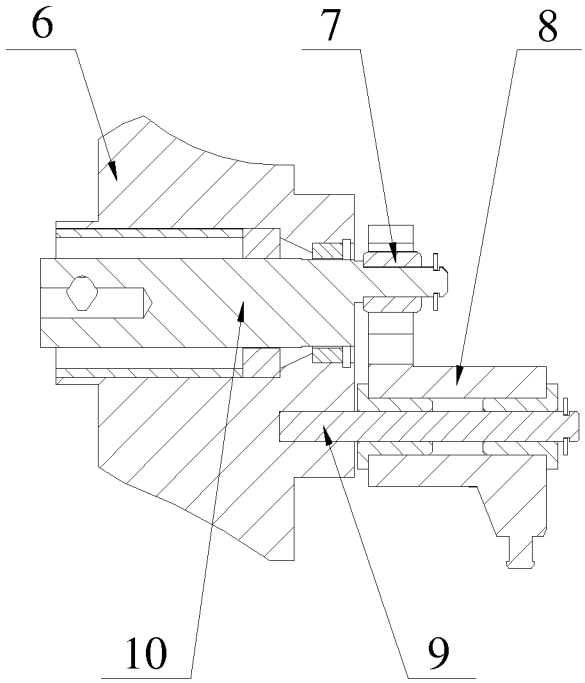

Fig. 3

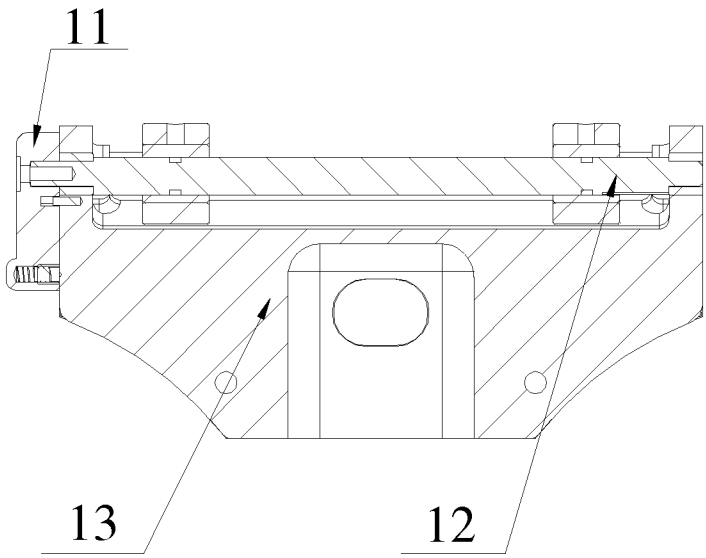

Fig. 4

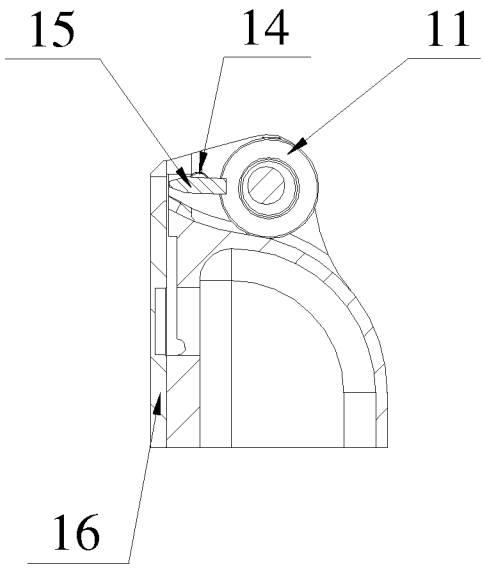

Fig. 5

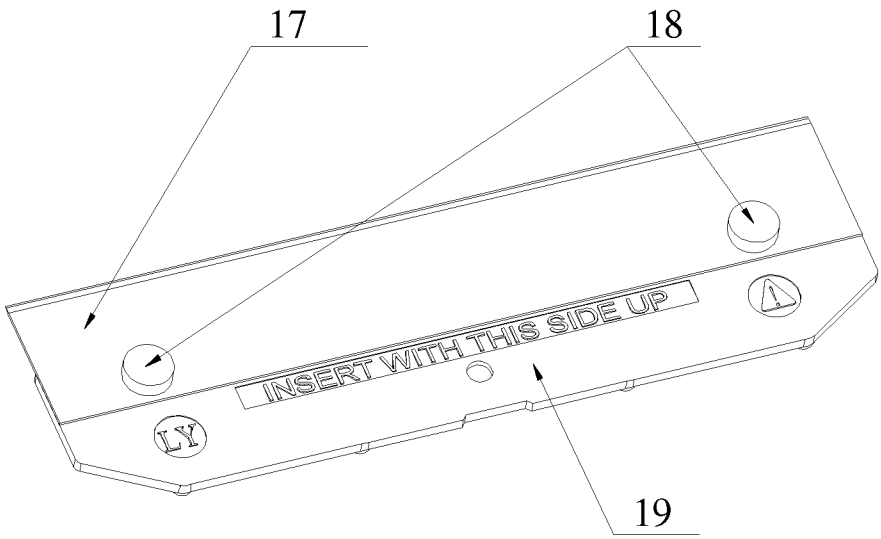

Fig. 6

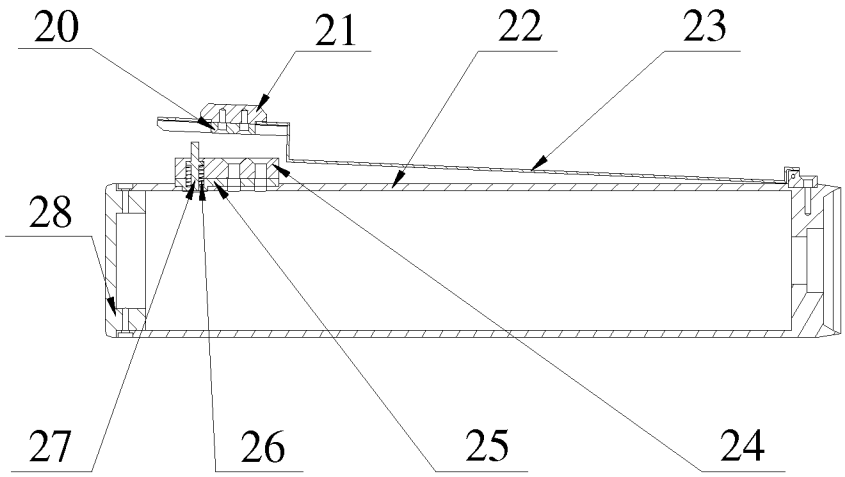

Fig. 7

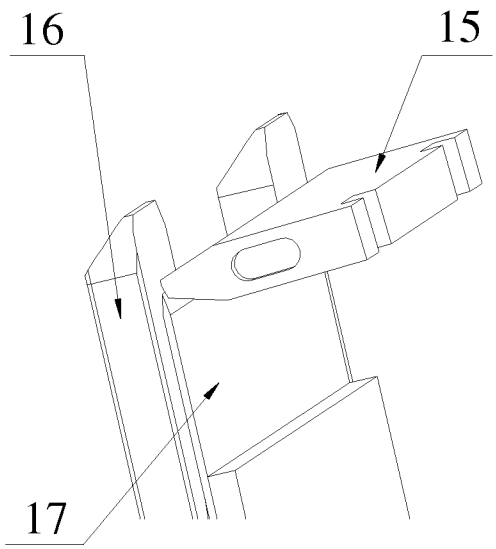

Fig. 8

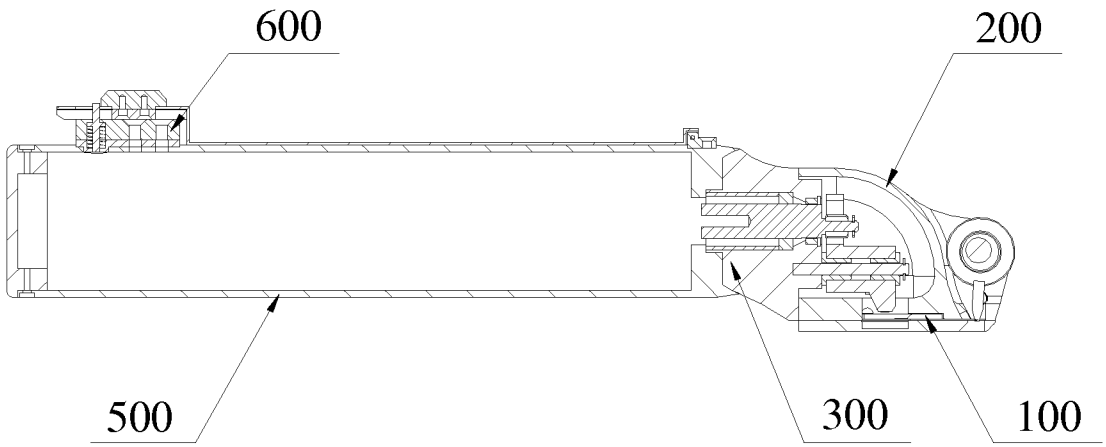

Fig. 9

INTERNATIONAL SEARCH REPORT

International application No.
PCT/CN2013/072555

A. CLASSIFICATION OF SUBJECT MATTER

A61B 17/322 (2006.01) i

According to International Patent Classification (IPC) or to both national classification and IPC

B. FIELDS SEARCHED

Minimum documentation searched (classification system followed by classification symbols)

IPC: A61B 17/-

Documentation searched other than minimum documentation to the extent that such documents are included in the fields searched

Electronic data base consulted during the international search (name of data base and, where practicable, search terms used)

CNPAT, WPI, EPODOC, CNKI: dermatome, housing, motor, battery, detach+, remov+, switch, harvest

C. DOCUMENTS CONSIDERED TO BE RELEVANT

Category*	Citation of document, with indication, where appropriate, of the relevant passages	Relevant to claim No.
P, X	CN 202589617 U (BYD CO., LTD.) 12 December 2012 (12.12.2012) claims 1-10, figures 1-9	1-11
Y	US 6080166 A (MCEWEN, James Allen et al.) 27 June 2000 (27.06.2000) description, column 4 line 41 to column 7 line 10 and figures 1-6	1-11
Y	WO 2010/146431 A1 (FRII S.A.) 23 December 2010 (23.12.2010) description, page 11 line 13 to page 13 line 21 and figures 1-6	1-11
Y	US 2009/0157095 A1 (ZIMMER ORTHOPAEDIC SURGICAL PRODUCTS, INC.) 18 June 2009 (18.06.2009) description, paragraphs [0021] and [0022], figures 1-3	5-7

☒ Further documents are listed in the continuation of Box C. ☒ See patent family annex.

* Special categories of cited documents:

"A" document defining the general state of the art which is not considered to be of particular relevance

"E" earlier application or patent but published on or after the international filing date

"L" document which may throw doubts on priority claim (S) or which is cited to establish the publication date of another citation or other special reason (as specified)

"O" document referring to an oral disclosure, use, exhibition or other means

"P" document published prior to the international filing date but later than the priority date claimed

"T" later document published after the international filing date or priority date and not in conflict with the application but cited to understand the principle or theory underlying the invention

"X" document of particular relevance; the claimed invention cannot be considered novel or cannot be considered to involve an inventive step when the document is taken alone

"Y" document of particular relevance; the claimed invention cannot be considered to involve an inventive step when the document is combined with one or more other such documents, such combination being obvious to a person skilled in the art

"&" document member of the same patent family

Date of the actual completion of the international search	Date of mailing of the international search report
30 May 2013 (30.05.2013)	**20 Jun. 2013 (20.06.2013)**
Name and mailing address of the ISA/CN The State Intellectual Property Office, the P.R.China 6 Xitucheng Rd., Jimen Bridge, Haidian District, Beijing, China 100088 Facsimile No. 86-10-62019451	Authorized officer MA,Wei Telephone No. (86-10)82245088

Form PCT/ISA /210 (second sheet) (July 2009)

INTERNATIONAL SEARCH REPORT

International application No.
PCT/CN2013/072555

C (Continuation). DOCUMENTS CONSIDERED TO BE RELEVANT

Category*	Citation of document, with indication, where appropriate, of the relevant passages	Relevant to claim No.
Y	US 2004/0092992 A1 (ADAMS, Kenneth et al.) 13 May 2004 (13.05.2004) description, paragraphs [0059] and [0060], figure 11	1
Y	CN 201091599 Y (XU, Shengyuan) 30 July 2008 (30.07.2008) abstract, figure 1	1
A	US 4917086 (SNYDER LABORATORIES, INC.) 17 April 1990 (17.04.1990) the whole document	1-11
A	US 2010/0004668 A1 (SMITH, Kevin W. et al.) 07 January 2010 (07.01.2010) the whole document	1-11
A	CN 2065885 U (SHANGHAI SURGICAL APPARATUS FACTORY) 21 November 1990 (21.11.1990) the whole document	1-11

INTERNATIONAL SEARCH REPORT
Information on patent family members

International application No.
PCT/CN2013/072555

Patent Documents referred in the Report	Publication Date	Patent Family	Publication Date
CN 202589617 U	12.12.2012	None	
US 6080166 A	27.06.2000	US 5873881 A	23.02.1999
WO 2010/146431 A1	23.12.2010	EP 2442946 A1	25.04.2012
		US 2012/0123203 A1	17.05.2012
		CH 701320 A	31.12.2010
US 2009/0157095 A1	18.06.2009	WO 2009/076354 A2	18.06.2009
		AU 2008335240 A1	18.06.2009
		CA 2709282 A1	18.06.2009
		EP 2231038 A2	29.09.2010
		US 8002779 B2	23.08.2011
		EP 2484298 A1	08.08.2012
		US 2011/0276060 A1	10.11.2011
US 2004/0092992 A1	13.05.2004	None	
CN 201091599 Y	30.07.2008	None	
US 4917086	17.04.1990	CA 1321524 C	24.08.1993
US 2010/0004668 A1	07.01.2010	US 2009/0143805 A1	04.06.2009
		US 8403950 B2	26.03.2013
		US 2009/0143804 A1	04.06.2009
		US 8403949 B2	26.03.2013
		US 2009/0143803 A1	04.06.2009
		US 2009/0143802 A1	04.06.2009
		US 8372099 B2	12.02.2013
		US 2009/0143801 A1	04.06.2009
		US 8403948 B2	26.03.2013
		US 2009/0143800 A1	04.06.2009
		US 2009/0143799 A1	04.06.2009
		US 2009/0143798 A1	04.06.2009
		US 8419758 B2	16.04.2013
		US 2009/0143797 A1	04.06.2009
		US 8419757 B2	16.04.2013

INTERNATIONAL SEARCH REPORT
Information on patent family members

International application No.
PCT/CN2013/072555

Patent Documents referred in the Report	Publication Date	Patent Family	Publication Date
		WO 2009/073608 A1	11.06.2009
		CA 2707837 A	11.06.2009
		AU 2008334050 A	11.06.2009
		US 2010/0004669 A1	07.01.2010
		US 8425545 B2	23.04.2013
		US 2010/0000074 A1	07.01.2010
		US 8061014 B2	22.11.2011
		EP 2229104 A1	22.09.2010
		US 2011/0009890 A1	13.01.2011
		US 8334468 B2	18.12.2012
		JP 2011505226 A	24.02.2011
		US 2011/0054506 A	03.03.2011
		US 8338726 B2	25.12.2012
		CA 2790917 A	03.03.2011
		WO 2011/025857 A1	03.03.2011
		US 2011/0167620 A1	14.07.2011
		US 8377085 B2	19.02.2013
		US 2011/0167619 A1	14.07.2011
		US 8236020 B2	07.08.2012
		US 2011/0172689 A1	14.07.2011
		US 8197502 B2	12.06.2012
		US 2011/0167621 A1	14.07.2011
		US 8418349 B2	16.04.2013
		US 2011/0178542 A1	21.07.2011
		US 8333778 B2	18.12.2012
		US 2011/0184445 A1	28.07.2011
		US 8372101 B2	12.02.2013
		US 2011/0190800 A1	04.08.2011
		US 8333779 B2	18.12.2012
		US 2011/0251632 A1	13.10.2011

INTERNATIONAL SEARCH REPORT
Information on patent family members

International application No.
PCT/CN2013/072555

Patent Documents referred in the Report	Publication Date	Patent Family	Publication Date
		US 2011/0257650 A1	20.10.2011
		AU 2010286689 A	15.03.2012
		US 2012/0071796 A1	22.03.2012
		EP 2433578 A2	28.03.2012
		EP 2433577 A2	28.03.2012
		US 2012/0078278 A1	29.03.2012
		US 8185539 B2	22.05.2012
		JP 2012096046 A	24.05.2012
		JP 2012096045 A	24.05.2012
		EP 2471080 A1	04.07.2012
		US 2012/0221031 A1	30.08.2012
		US 2012/0277780 A1	01.11.2012
		JP 2013502998 A	31.01.2013
		US 2013/0046290 A1	21.02.2013
		US 2013/0046321 A1	21.02.2013
		US 2013/0046291 A1	21.02.2013
		US 2013/0046322 A1	21.02.2013
CN 2065885 U	21.11.1990	None	