Aug. 29, 1939. L. E. MITCHELL 2,171,162

MINING MACHINE

Original Filed April 25, 1936 7 Sheets-Sheet 1

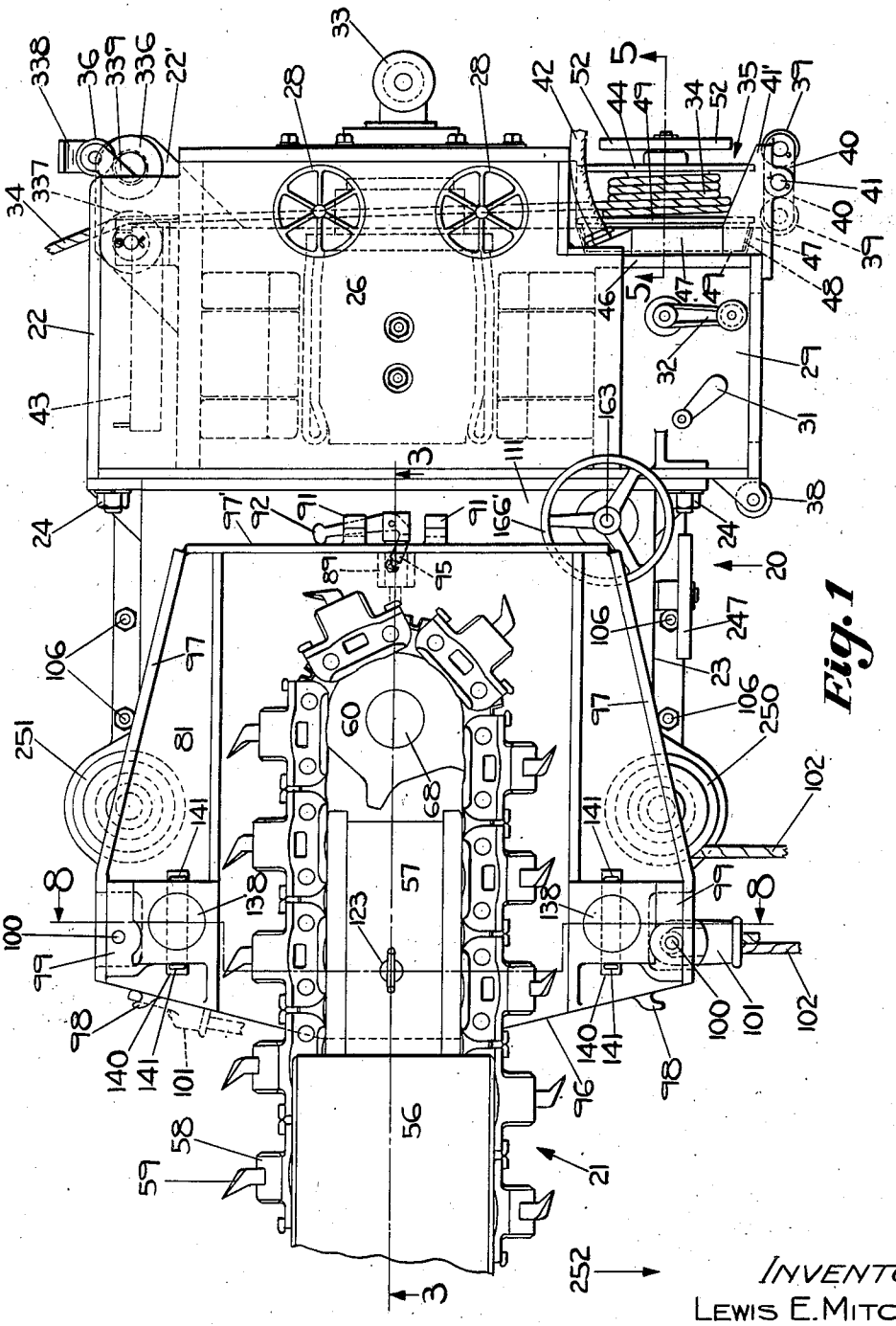

Fig. 1

INVENTOR:
LEWIS E. MITCHELL,
BY
Chas. M. Nissen,
ATT'Y.

Aug. 29, 1939. L. E. MITCHELL 2,171,162

MINING MACHINE

Original Filed April 25, 1936 7 Sheets-Sheet 2

Fig. 2

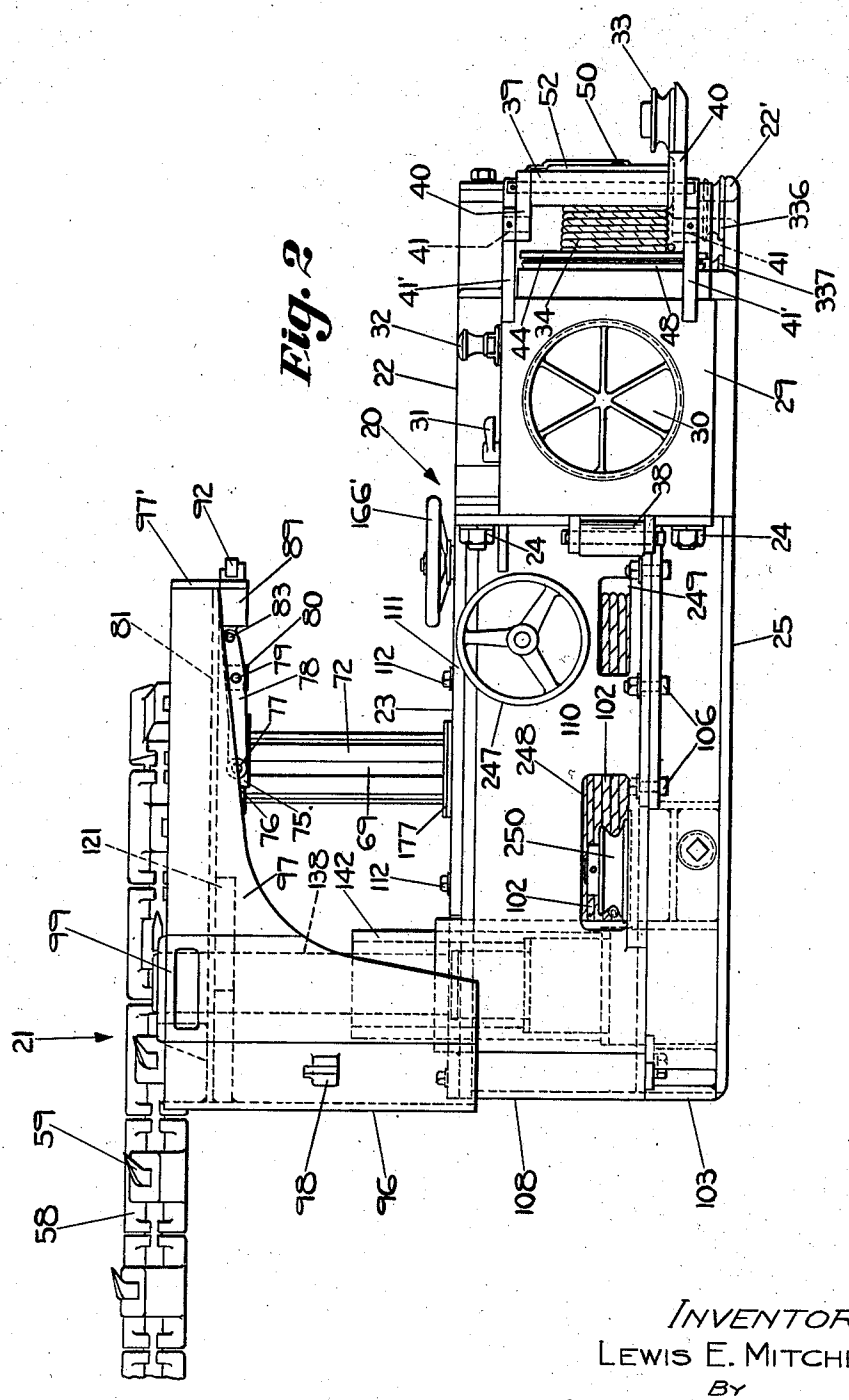

INVENTOR:
LEWIS E. MITCHELL,
BY
Chas. M. Nissen,
ATT'Y.

Aug. 29, 1939. L. E. MITCHELL 2,171,162

MINING MACHINE

Original Filed April 25, 1936 7 Sheets-Sheet 3

Fig. 3

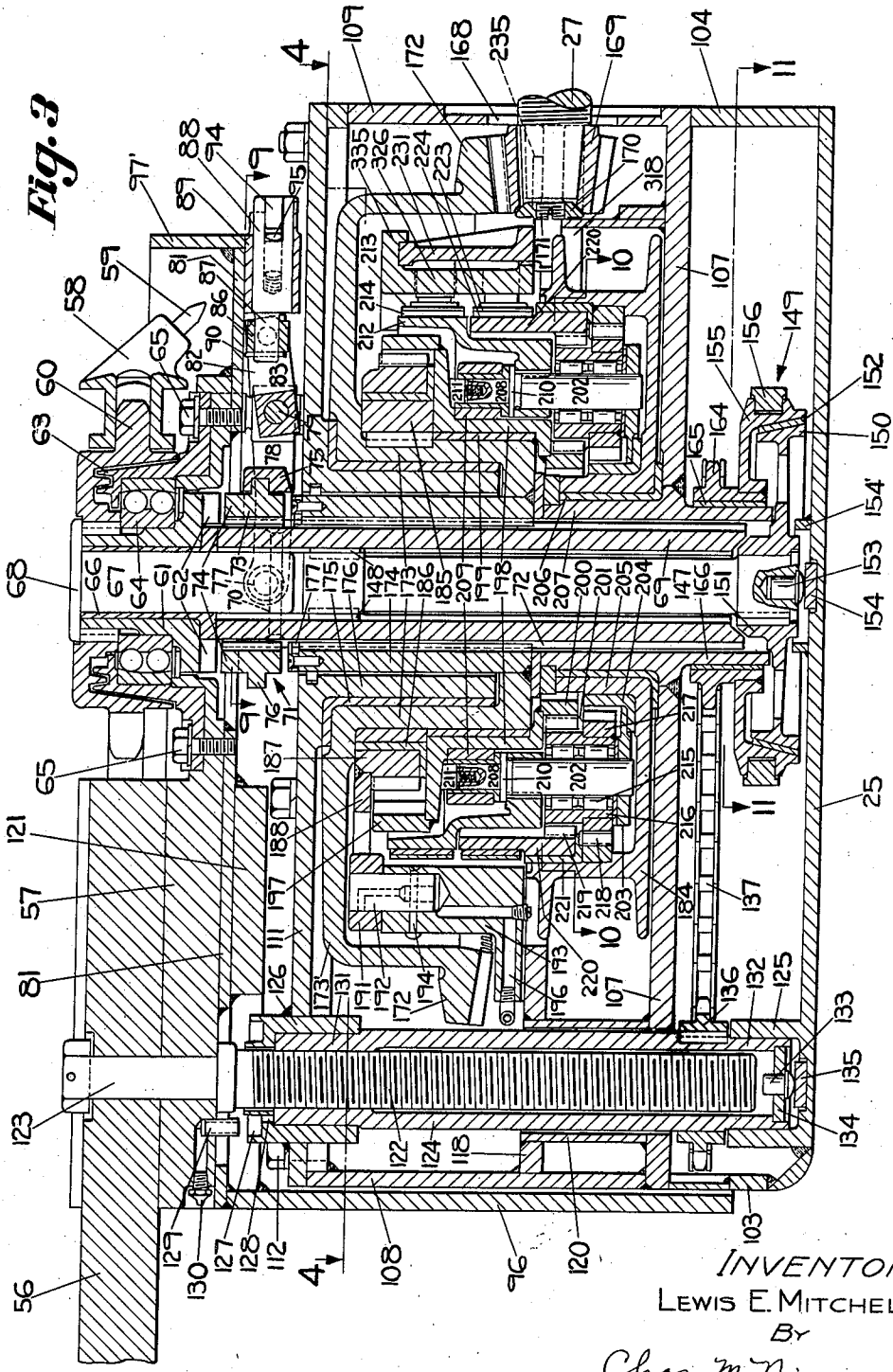

INVENTOR:
LEWIS E. MITCHELL,
BY
Chas. M. Nissen,
ATT'Y.

Aug. 29, 1939. L. E. MITCHELL 2,171,162

MINING MACHINE

Original Filed April 25, 1936 7 Sheets-Sheet 4

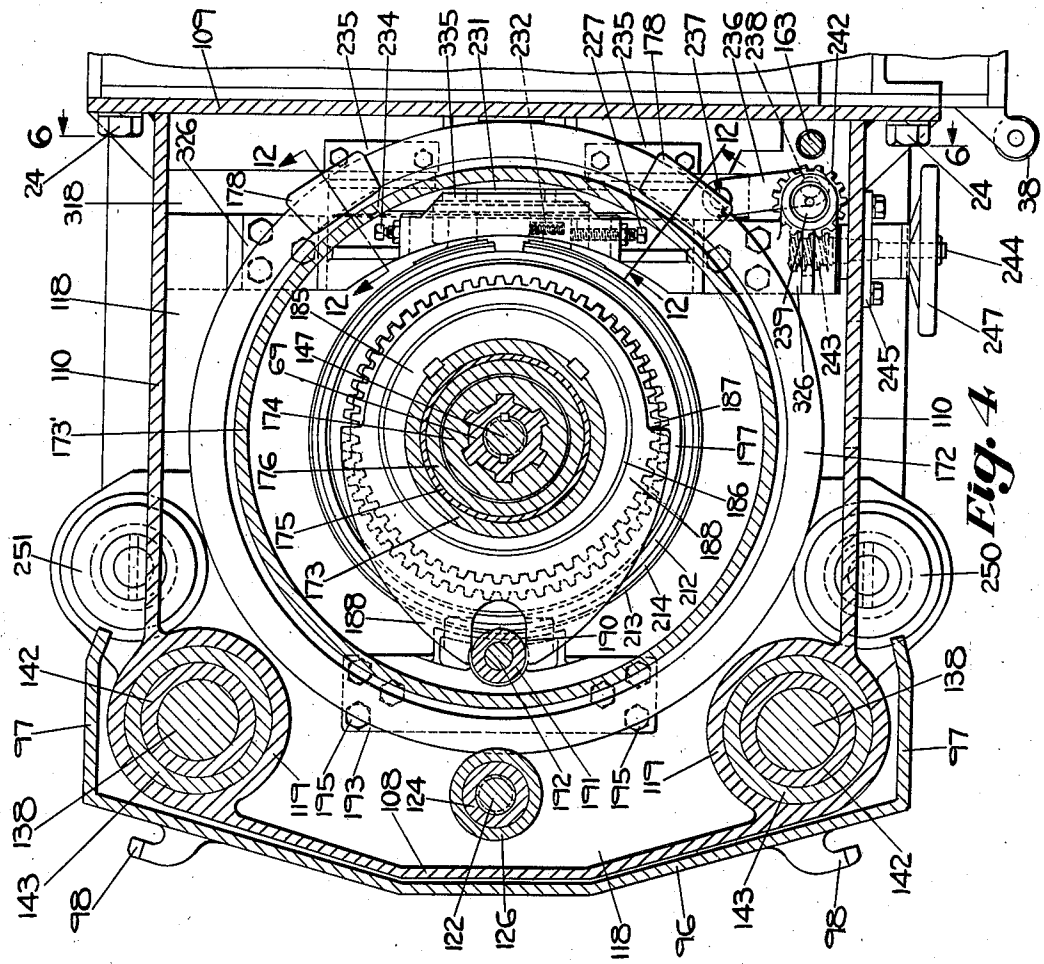

Fig. 4

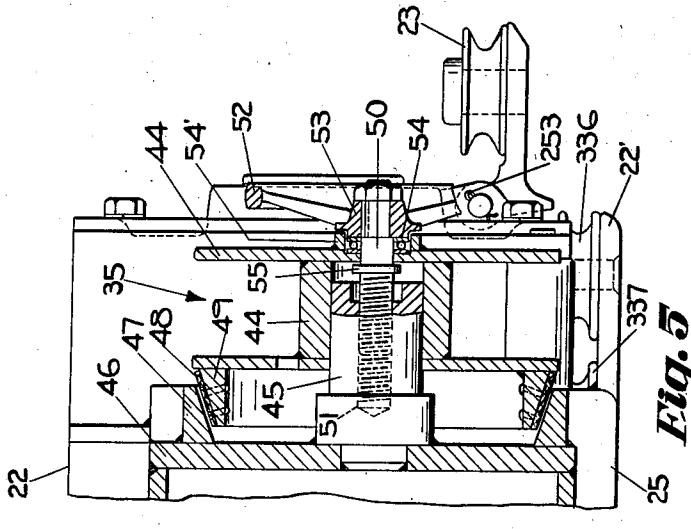

Fig. 5

INVENTOR:
LEWIS E. MITCHELL,
BY
Chas. M. Nissen,
ATT'Y.

Aug. 29, 1939. L. E. MITCHELL 2,171,162

MINING MACHINE

Original Filed April 25, 1936 7 Sheets-Sheet 5

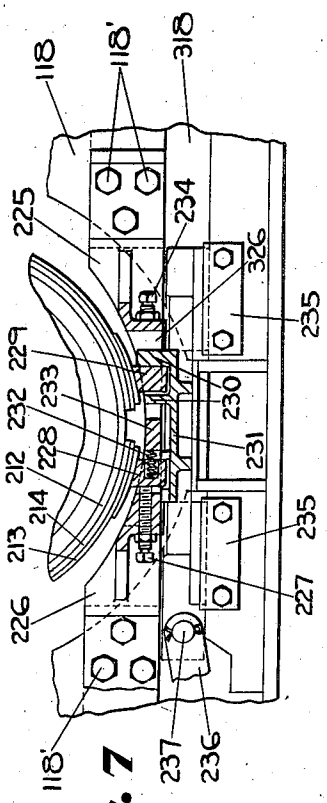

Fig. 7

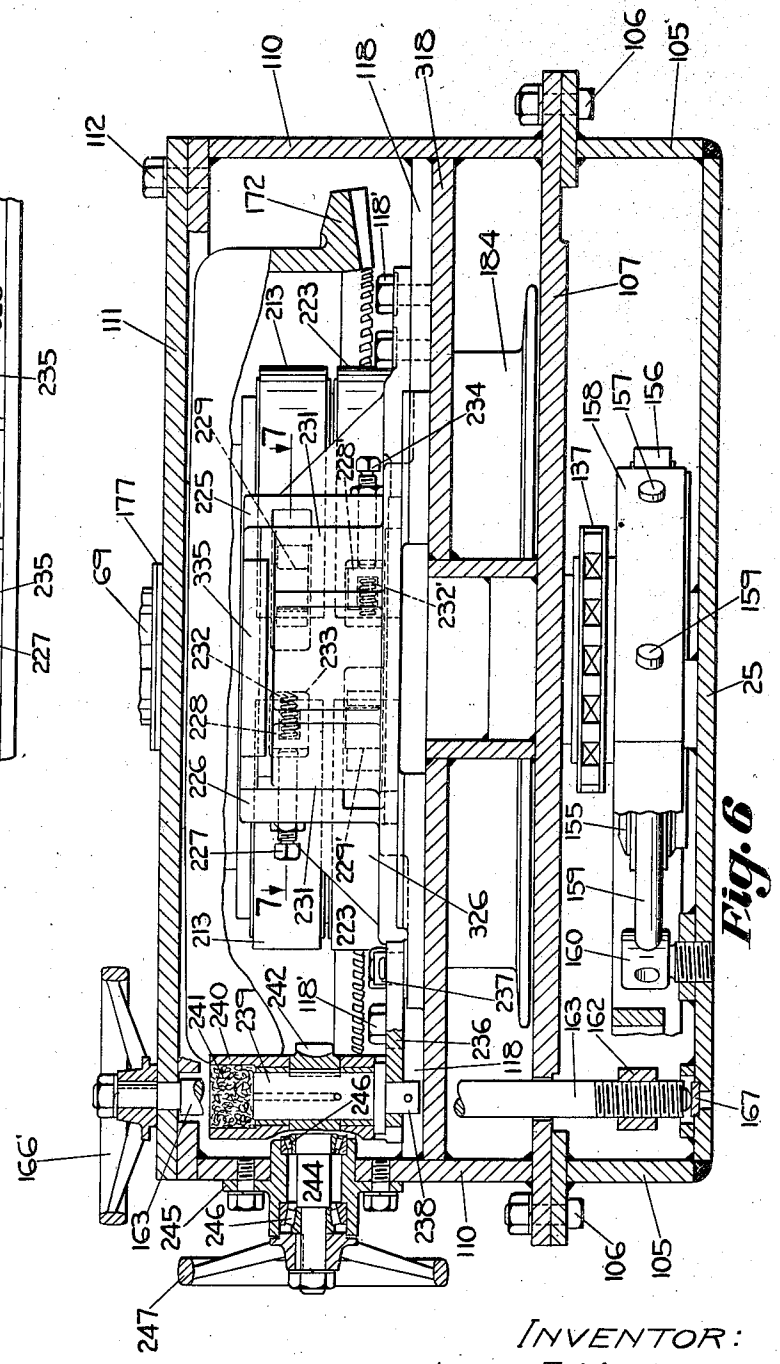

Fig. 6

INVENTOR:
LEWIS E. MITCHELL,
BY
Chas. M. Nissen,
ATT'Y.

Aug. 29, 1939. L. E. MITCHELL 2,171,162

MINING MACHINE

Original Filed April 25, 1936 7 Sheets-Sheet 6

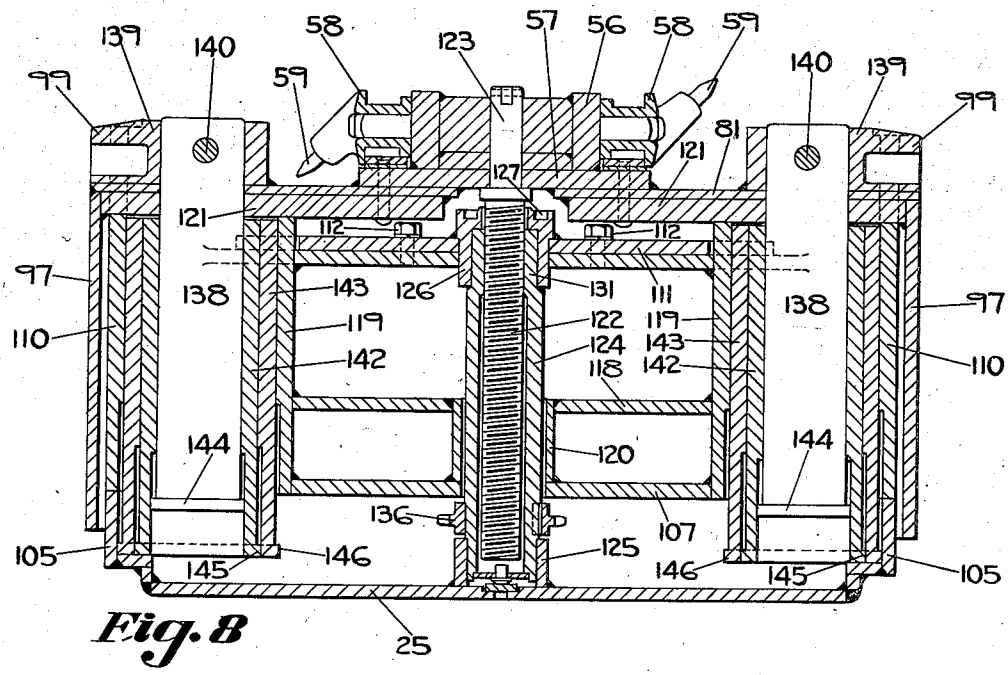

Fig. 8

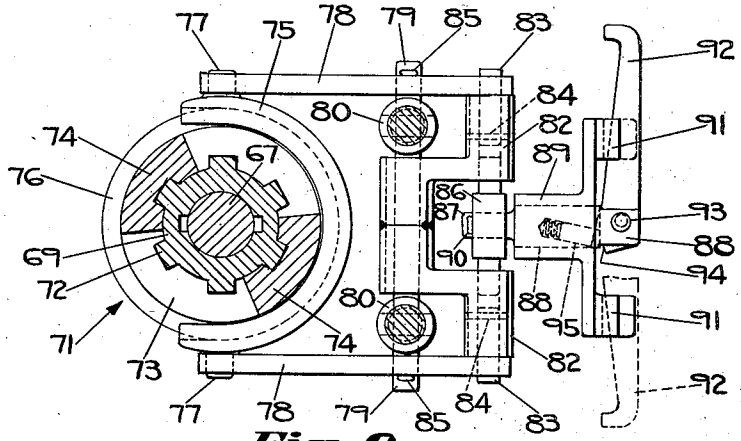

Fig. 9

INVENTOR:
LEWIS E. MITCHELL,
BY
Chas. M. Nissen,
ATT'Y.

Aug. 29, 1939. L. E. MITCHELL 2,171,162

MINING MACHINE

Original Filed April 25, 1936 7 Sheets-Sheet 7

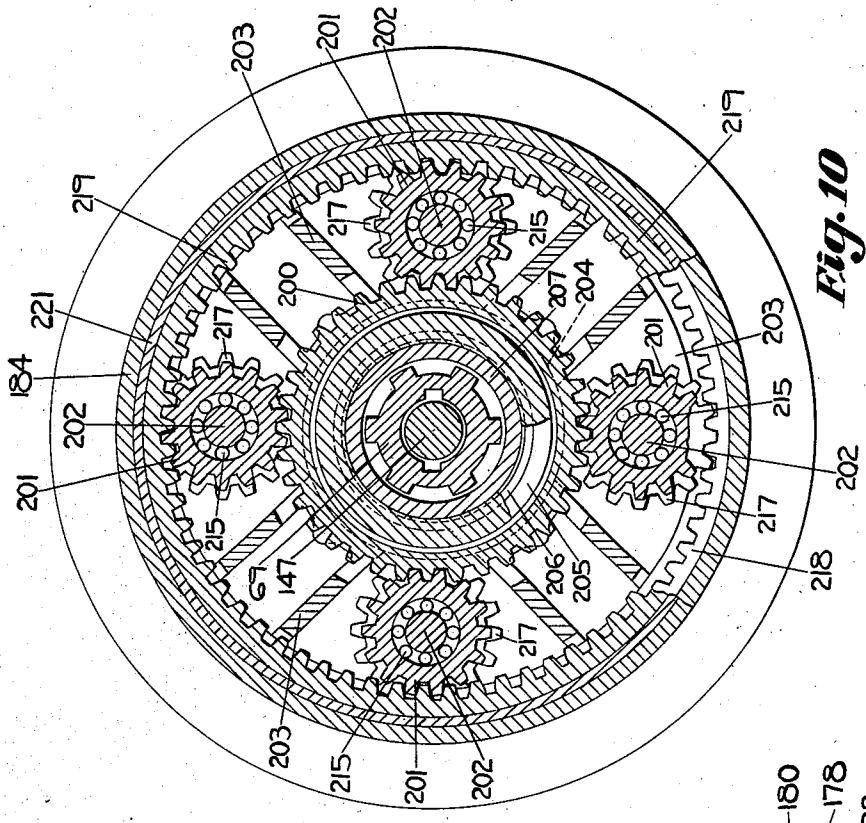

Fig. 10

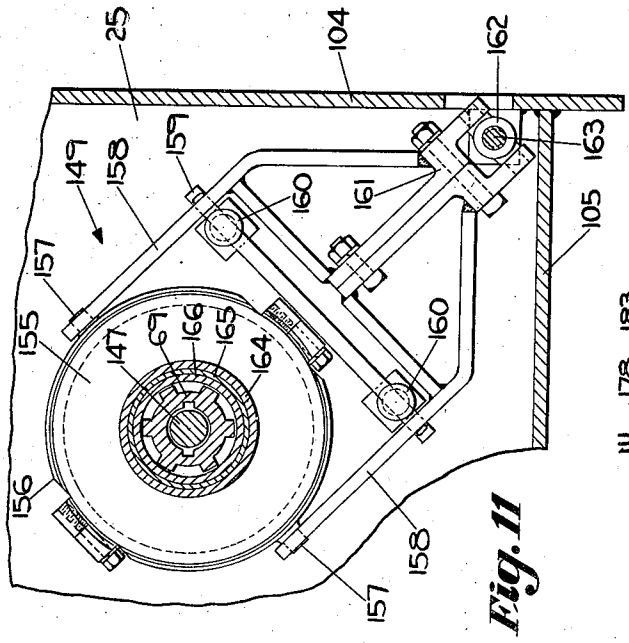

Fig. 11

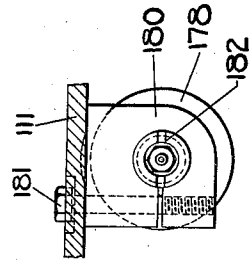

Fig. 13

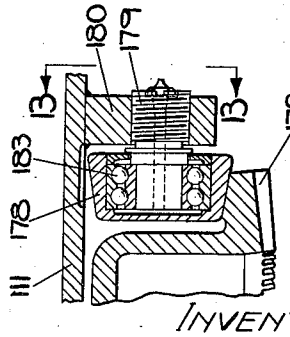

Fig. 12

INVENTOR:
LEWIS E. MITCHELL,
BY
Chas. M. Nissen,
ATT'Y.

Patented Aug. 29, 1939 2,171,162

UNITED STATES PATENT OFFICE

2,171,162

MINING MACHINE

Lewis E. Mitchell, Columbus, Ohio, assignor to The Jeffrey Manufacturing Company, a corporation of Ohio

Original application April 25, 1936, Serial No. 76,456. Divided and this application March 17, 1937, Serial No. 131,376. Renewed May 27, 1939

21 Claims. (Cl. 262—30)

This invention relates to a mining machine and more particularly to a mining machine adapted to cut horizontal kerfs in a coal mine.

An object of the invention is to provide a mining machine of the above mentioned type having a frame with a flat bottom adapted to rest directly on a mine floor and to slide thereover, which machine is provided with a very compact means to slide it over the mine floor.

Another object of the invention is to provide an extremely compact mining machine of the type above mentioned yet to provide a machine which is extremely flexible.

A further object of the invention is the provision of improved planetary gear mechanism for driving a feeding rope drum on the axis of the shaft connected to the chain kerf-cutter of a mining machine.

A further object of the invention is the provision of improved rope drum feeding apparatus enclosed within the supporting frame but controlled by a single wheel above said frame to effect either haulage speed of the machine or feeding movement thereof.

Other objects of the invention will appear hereinafter, the novel features and combinations being set forth in the appended claims.

The present application is a division of my application Serial No. 76,456, filed April 25, 1936, for an improvement in a Mining machine.

In the accompanying drawings,

Fig. 1 is a plan view of the mining machine comprising my invention with the cutter bar cut off to reduce the length of the drawing;

Fig. 2 is a side elevational view of the device of Fig. 1;

Fig. 3 is an elevational sectional view taken on the line 3—3 of Fig. 1 looking in the direction of the arrows;

Fig. 4 is a sectional plan view taken on the line 4—4 of Fig. 3 looking in the direction of the arrows;

Fig. 5 is a sectional elevational view taken on the line 5—5 of Fig. 1 looking in the direction of the arrows;

Fig. 6 is a sectional elevational view taken on the line 6—6 of Fig. 4 looking in the direction of the arrows;

Fig. 7 is a sectional plan view of a portion of the machine taken on the line 7—7 of Fig. 6 looking in the direction of the arrows;

Fig. 8 is a sectional elevational view taken on the line 8—8 of Fig. 1 looking in the direction of the arrows;

Fig. 9 is a plan and sectional view of a detail taken on the line 9—9 of Fig. 3 looking in the direction of the arrows;

Fig. 10 is a sectional plan view of the planetary gear mechanism taken on the line 10—10 of Fig. 3 looking in the direction of the arrows;

Fig. 11 is a plan and sectional view taken on the line 11—11 of Fig. 3 looking in the direction of the arrows;

Fig. 12 is a sectional view of a detail taken on the line 12—12 of Fig. 4 looking in the direction of the arrows; and

Fig. 13 is an end elevational view taken on the line 13—13 of Fig. 12 looking in the direction of the arrows.

The mining machine herein disclosed is generally of the "Shortwall" type, that is, it is generally employed in a relatively wide room for cutting horizontal kerfs across the face of the mine room. It is particularly constructed for a room and pillar type of mining system employing conveyors in which there will be a face conveyor which runs parallel to the room face and feeds a room conveyor which runs parallel to a rib of the room, said room conveyor feeding entry conveyors of the complete system which will load mine cars.

It is desirable to keep the length of the main frame of the mining machine as short as possible to the end that the face conveyor may be maintained as close to the mine face as possible, whereby supporting timbers or roof props may be provided relatively close to the mine face. It is, of course, evident that both the face conveyor and the mining machine must work between the roof propping timbers and the mine face.

Referring particularly to Figs. 1 and 2 of the drawings it is to be seen that the mining machine comprises a main frame 20 to which is attached for vertical adjustment a kerf cutting mechanism 21. The main frame 20 is formed of two sections comprising the motor section 22 and the gearing section 23, which sections 22 and 23 are removably attached together as by nuts and bolts 24. By removing the nuts 24, 24, the motor section 22 may be entirely removed from the main frame 20.

The section 23 is welded to and carried upon a flat bottom or skid pan 25 (Figs. 2 and 6) which is adapted to rest upon and slide over the floor of a mine room. The motor section 22, the bottom of which is flush with the bottom of the pan 25 in direct contact with the mine bottom, comprises a housing within which is mounted an electric motor 26 provided with a rotating armature shaft 27 (Fig. 3) extending into the housing of

the gearing section 23 on a horizontal longitudinal axis. To provide access to the brushes of the motor 26, the housing of the motor section 22 is also provided with a pair of flame-proof removable caps 28, 28. (Fig. 1.)

Rigidly attached to and forming a part of the motor section 22 is a control box 29 for the electric motor 26, which is provided with a removable flame-proof cap 30 (Fig. 2) to provide access to the controls therein. A control lever 32 and a reverse lever 31 are provided for controlling appropriate switches within the switch-box 29, for starting the motor 26 and for reversing its direction of rotation. (Fig. 1.)

Adjacent the rear central portion of the motor section 22, is provided a detachable guide sheave 33, Fig. 1, the details of which are illustrated in Fig. 5 and will be described more in detail hereinafter.

Also associated with the trailing side of the motor section 22, at that corner thereof remote from the working face of the mine vein, are mounted on the bottom plate 22', Figs. 1, 2 and 5, the guide rollers or pulleys 336 and 337 which may be alternately engaged by a retarding or guide rope or cable 34. The leading side of the motor section 22 as shown in Fig. 1 carries the cable guide rollers 38 and 39, the guide roller 38 being pivoted to a bracket fixed to the control box 29, while the guide roller 39 as shown in Fig. 2 is pivoted to brackets 40, 40 which in turn are pivotally connected as shown at 41, 41, Fig. 2, to brackets 41', 41' secured to the motor control box 29. The guide roller 39 may be swung either to its full line position shown in Fig. 1 or to the dotted line position. The electric cable 42 shown in Fig. 1 leads from a distant source of electric power supply to the control box 29, and motor starting resistance 43 may be located in the frame of the motor section 22 in the position illustrated in Fig. 1.

By referring to Fig. 5 is will be seen that the retarding rope drum mechanism 35 comprises a drum 44 journaled on the stationary stub bearing 45 secured rigidly to the vertical plate 46 of the motor section 22. Secured to the vertical plate 46 is a frusto-conical clutch element 47 in position to co-operate with the brake lining 48 carried by the clutch element or brake drum 49 which is rigidly attached to the inner flange of the drum 44. By shifting the drum 44 longitudinally along the stub bearing 45, the retarding force effected by the cone clutch or brake may be effectually adjusted.

In order to shift the drum 44 to partially apply the slip clutch shown in Fig. 5, I provide a threaded rod 50 adapted to be received by the threaded bore 51 in the axial center of the stub bearing 45, and key a hand wheel 52 to the outer end of the rod 50. The wheel 52 has a hub 53 the inner side of which engages the anti-friction bearing 54 mounted within the cup 54' at the center of the outer flange of the rope drum 44. A collar 55 on the rod 50 is located within the drum 44 as shown in Fig. 5, in position to assure movement of the drum 44 axially of the bearing 45 when the wheel 52 is rotated. The rod 50 is freely rotatable relatively to the rope drum 44 but rotation of the rod 50 by means of the wheel 52 will rotate the inner threaded end in the threaded bore 51 and thereby cause movement of the clutch elements 47, 49 toward or away from each other.

The kerf-cutting mechanism 21 shown in Figs. 1, 2 and 3, comprises a flat horizontal cutter bar 56 mounted upon and rigidly attached to a cutter bar support or head 57. The kerf-cutting mechanism is adjustable along vertical lines with respect to the main frame 20 and the operating mechanism enclosed thereby.

An endless cutter chain 58 is provided with reversible cutter bits 59 and is adapted to travel around the cutter bar when driven by the sprocket 60 which is mounted upon and keyed to a clutch element 61 as shown in Fig. 3. The sprocket 60 and clutch element 61 are mounted upon a bracket 63 with the ball bearing element 64 intervening. The bracket 63 is shown in Fig. 3, removably attached to the outer bar support frame or head 57 by means of machine screws 65. The clutch element 61 is mounted upon a journal bearing 66 carried upon a stub shaft 67 which is provided with a cap 68 overlying the clutch element and the hub of the spricket 60.

The stub shaft 67 is secured by means of the transverse rivet 70 to the upper end of the hollow or tubular shaft 69 which is splined both internally and externally. By means of the clutch mechanism 71, shown in detail in Figs. 3 and 9, the motor 26 may be connected through the vertical tubular shaft 69 to the sprocket 60 to drive the same, as will be hereinafter more fully explained.

As shown in Figs. 2, 3 and 9, the vertical tubular drive shaft 69 is provided with external splines 72 which are engaged by the clutch element 73. The upper side of the clutch element 73 is provided with jaws 74 adapted to cooperate with the jaws 62 on the underside of the clutch element 61. By means of manually operated mechanism the clutch element 73 can be slid vertically with respect to the splined tubular drive shaft 69, to effect a driving connection between the vertical tubular drive shaft 69 and the clutch element 61 to effect rotation of the driving sprocket 60 of the chain kerf cutter.

Manually operated mechanism for applying or releasing the clutch 71 is shown particularly in Figs. 3 and 9. A shipper comprising a yoke 75 has a semi-circular groove which fits a circular flange 76 integral with the clutch element 73. It will be evident that free rotary movement is permitted between the flange 76 and the yoke 75. When the chain cutter is being driven, and vertical tubular shaft 69 is being rotated, and since the clutch element 73 is splined to the exterior of the tubular shaft 69, this clutch element will also be rotated and consequently the circular flange 76 will be rotated in the semi-circular groove of the yoke 75 when the chain cutter is being driven by rotation of the sprocket 60.

The yoke 75 is provided with trunnions 77, 77 (Fig. 9) journaled in bearings at the outer ends of the lever arms 78, 78 which are pivoted to the transverse shaft 79 which is carried by a pair of bosses 80, 80 screw-threadedly attached to a bottom plate 81 (Fig. 3) of the cutter bar support or head 57.

It should be understood that the operating mechanism for the clutch 71 must be secured to the cutter bar support frame or head so as to move up and down bodily therewith as the kerf-cutting unit is adjusted in elevation relative to the main frame 20, as shown in Fig. 2.

A pair of brackets 82, 82 welded to each other, as shown in Fig. 9, are pivotally mounted on the supporting shaft 79, and are connected to stub shafts 83, 83 by means of the transverse pins 84, 84. The rear ends of the arms 78, 78 are

pivoted to the stub shafts 83, 83. Removable cotter pins 85, 85 are provided on the ends of the shaft 79 to maintain the arms 78, 78 in proper relation to the other parts shown in Fig. 9. By removing the cotter pins 85, 85 the arms 78, 78 may be removed to disassemble the entire shipper mechanism for renewal or repairs.

Extending between the U-shaped arms of the brackets 82, 82 and pivotally mounted with respect thereto is a trunnion 86 which is provided with a central transverse aperture adapted to receive an eccentric extension 87 eccentrically mounted upon a cylinder 88 which is rotatably journaled in the bearing 89 carried by the bottom plate 81, as shown in Fig. 3. A cotter pin 90 is provided to maintain the extension 87 in the trunnion 86 and to permit removal thereof. The journal bearing 89 is provided with a pair of laterally extending abutments or stops 91, 91 which are adapted to limit the throw of a handle 92 which is pivotally attached to the cylinder 88 by means of a pin 93.

The handle 92 is provided with a cam 94 adapted to co-operate with a spring-pressed plunger 95 which tends to retain the handle 92 either in the full line position in Fig. 9 or in the dotted line position. When the handle 92 is in its full line position, as illustrated in Fig. 9, it occupies the position shown in Fig. 3. The eccentric extension 87 will then be in its uppermost position. This will rock the arms 78 about the pivot shaft 79 to move the yoke 75 to its lower position to release the clutch 71. The handle 92 has a movement through a semi-circular path and the limit stops 91 may be in the nature of clips comprising spaced-apart plates of different lengths with a groove in between for entrance of the lever 92. The pivot 93 may be an eccentric and the spring-pressed plunger 95 may act to hold the arm 92 in either the clip 91 where the clutch 71 will be applied, or in the other clip 91 where the clutch will be released. It will thus be seen that the clips 91, 91 may be used to positively hold the clutch 71 of Fig. 3 either in its applied position or in its released position.

In order to apply or release the clutch 71 of Fig. 3, the handle 92 of Fig. 9 is first swung about the eccentric pivot 93 which assists in moving the lever 92 away from the clip 91. When the lever 92 is moved from its full line position to its dotted line position as shown in Fig. 9, the eccentric extension 87 of Fig. 3 will be moved to its lowermost position, thus lifting the yoke 75 and thereby causing engagement between the jaws 62 and 74 of the clutch elements 61 and 73 of the clutch 71. This clutch mechanism 71 therefore provides means for effecting a driving connection between the vertical tubular shaft 69 and the cutter chain 58, but it should be particularly noted that by locating the clutch 71 between the upper end of the tubular shaft 69 and the sprocket 60, the motor 26 may be operated to rotate the haulage rope drum while the cutter chain is not being driven.

As shown in Figs. 2 and 3, the cutter bar support or head 57 carries a depending apron having the shape shown in Figs. 2 and 4 and serving as a shield or guard plate for the elevating mechanism hereinafter described, and also as a vertical guard plate overlapping the front end of the main frame, as shown in Fig. 2, in position to abut against the working face of the mine vein when the kerf cutter is being fed transversely of itself along such mine vein. The apron which is secured to the cutter bar support or head 57 and depends therefrom, as shown in Figs. 2 and 3, comprises a front downwardly extending plate 96 and a pair of downwardly extending side plates 97, 97 which are rigidly secured by welding to the bottom plate 81. The front plate 96 preferably tapers toward the rear at each side and is provided with a connecting crosspiece 97' at its rear end, as shown in Figs. 1, 2 and 3.

The front plate 96 is provided with hooks 98, 98, Fig. 1, on opposite sides of the cutter bar and spaced below the same, as shown in Fig. 2. Also rigidly attached to the bottom plate 81 as well as to the front and side plates 96 and 97, on opposite sides of the cutter bar, are attaching brackets 99, 99 each provided with a pin 100 adapted to be attached to a coupling member 101 of the feed cable 102. As will be more fully described hereinafter, the cable 102 extends from either side of the mining machine to a pulley secured to an anchorage in the mine distant from the mining machine. The feed rope 102 is reeved around such pulley and its free end brought back for connection either to one of the anchorage hooks 98 or to one of the anchorage pins 100. When the kerf cutter is in its lowermost position and the coal being cut is relatively soft, the free end of the feed rope 102 may be connected to either of the anchorages 98. But when the kerf cutter occupies its topmost position or when the coal being cut is relatively hard, it becomes necessary to connect the free end of the feed rope closer to the cutter bar or to either of the attaching brackets 99. The feeding resistance met with by the chain kerf cutter must be balanced against the frictional resistance between the supporting pan 25 and the mine bottom, by so arranging the feed rope 102 in connection with the distant anchorage, and the free end of the rope in proper relation to the mining machine as a whole, with the kerf cutter at adjusted elevation.

As shown in Figs. 2, 3 and 8, the housing for the gearing of section 23 of the mining machine comprises a removable top part attached to a lower part. The lower part is composed of end walls 103, 104 and side walls 105, 105. The walls 103, 104 and 105 are all rigidly attached to the bottom or skid pan 25, as by welding. The top part of the gearing housing comprises a bottom plate 107, as shown in Fig. 8, welded to end plates 108, 109, as shown in Fig. 3, and also welded to side plates 110, 110, as shown in Fig. 6. The top part of the gearing section 23 of the mining machine is removably attached to the lower part by means of the bolts 106, 106, as shown in Figs. 2 and 6. The bottom of the lower part of the housing is closed by the skid pan plate 25. In fact, the lower part comprising the bottom plate 25, the end walls 103, 104 and the side walls 105, 105, constitutes the skid pan, removably secured by means of the bolts 106 to the under side of the gear housing 23. The upper part of the housing of the gear section 23 is removably secured to the motor section 22 by means of the bolts 24, 24, as shown in Figs. 1 and 4.

The lower part of the housing of the gear section 23 is also provided with a horizontal reinforcing plate 118 rigidly secured to the side plates 110 and to the end plate 103. The horizontal plate 118 intermediate the bottom plate 107 and the top plate 111, shown in Fig. 3, is welded to the vertical tube 120 which extends downwardly and is welded at its lower end to the bottom plate 107 to provide ample space for the elevating mechanism connected between the bottom part of the gear housing and the cutter bar,

as shown in Fig. 3. The plate 118 is also welded to the vertical guide cylinders 119 which form parts of the telescopic guiding mechanism spaced from the elevating device and located between the cutter head 57 and the gear section 23, as shown in Figs. 1 and 3. The plate 118 is provided with a large circular opening for the feeding rope drum 134, as shown in Fig. 3; but, nevertheless, the plate 118 extends over a wide area, as shown in Figs. 4 and 7, to provide support for the mechanism by means of which the feeding rope drum is controlled.

As shown in Fig. 8, the cutter head 57 is provided with laterally extending reinforcing plates 121 which are rigidly secured to the plate 81, which is the bottom plate of the kerf cutting unit, as shown in Figs. 1, 2 and 3.

The kerf cutting elevating mechanism will now be described. Centrally disposed with respect to the cutter head 57 and along a vertical axis which is substantially through the center of gravity of the adjustable kerf cutting unit 21, I provide a vertical threaded shaft 122 having an upper neck 123 which is rigidly attached to the cutter bar 56 and the cutter head 57. The vertical shaft 122 is screw-threaded through the upper end of the vertical tubular shaft 124 mounted for rotation in the cup bearing 125 carried by the bottom plate 25. The upper end of the tubular nut shaft 124 is journaled in the cup bearing 126 which may be welded to the top plate 111 shown in Fig. 3.

The upper cup bearing 126 is provided with a lubrication moat 127 having a lubricating opening 128, as shown in Fig. 3. Lubricating material is supplied to the moat 127 by a downwardly extending tube 129 carried by the cutter head 57 and co-operating with the grease fitting 130. Lubricating material supplied by the moat 127 will lubricate not only the cup bearing 126 but also the upper nut portion 131 of the tubular shaft 124, and lubricant may also be expected to seep through the nut 131 and along the screw-threaded shaft 122 and through the bottom thereof to the cup bearing 125.

The lower end 132 of the tubular shaft 124 is journaled in the cup bearing 125 and provided at its lower end with an annular shoulder to receive the disk plate 134 through an opening in the center of which extends upwardly the hardened bearing pin 133. The lower end of the pin 133 is provided with a circular head, the underside of which may have the shape of a segment of a sphere so as to make point contact with the hardened bearing plate 135 resting in a recess in the bottom of the cup 125, as shown in Fig. 3. As before stated, lubricant introduced into the moat 127 can by seepage find its way into the cup 125 to lubricate the pin bearing 133 as well as the cup bearing 125.

Keyed to the lower end portion of the tubular shaft 124 is a sprocket 136 connected by the endless sprocket chain 137 to a sprocket 164 to be driven thereby when the clutch 149 is applied. When the sprocket 136 is rotated, the nut 131 at the upper end of the tubular shaft 124 will be rotated, and since the threaded shaft 122 is held against rotation by its rigid attachment to the cutter bar 56 and cutter head 57, rotation of the nut 131 will result in variation in elevation of the kerf cutting unit. The nut 131 is rotatable in reverse directions and therefore the kerf cutting unit may be elevated or lowered, as desired.

On opposite sides of the cutter head I provide telescopic guiding mechanism which serves not only to guide the kerf cutting unit along vertical lines when adjusted in elevation, but also to co-operate with the spaced-apart vertical hollow shafts 69, 124, and the mechanism connecting the same to the kerf cutting unit, to distribute the feeding strains as the machine is fed by means of the rope feeding mechanism over the mine bottom, particularly when the kerf cutting unit is at relatively high elevation.

The two telescopic guiding mechanisms are substantially the same construction and therefore common reference characters are used for similar elements. Each of said guiding mechanisms comprises a heavy depending shaft or cylinder 138 which is removably secured by means of a pin 140 to the attaching bracket 99, as shown in Fig. 8. A vertical cylindrical opening through the bracket 139 receives the upper end of the cylinder 138, and the transverse pin 140 extends through the bracket and transversely through the cylinder 138, and the ends of the pin 140 receive cotter pins 141 (Fig. 1) to retain the cylinder 138 in position to always move bodily with the kerf cutting unit. The parts of the telescopic guiding mechanisms are close fitting as they are designed to resist all the feeding strains.

Surrounding each shaft 138 is a pair of concentric cylinders 142 and 143 each movable upwardly and downwardly relatively to the main frame. The cylinder 143 fits in the cylinder 119 to slide vertically therein, and the cylinder 142 fits in the cylinder 143 to slide vertically therein after the latter has reached the limit of its upward movement. Adjacent the bottoms of the cylinders 142, 143 and 119 cylindrical recesses provide annular shoulders for engagement by the circular collars or flanges 144, 145 and 146 one after another. It will thus be seen that telescopic guiding devices are provided on opposite sides of the main frame and between the latter and opposite sides of the kerf cutting unit. These guiding devices are entirely separate from the screw-threaded lifting device and also entirely separate from the tubular shaft 69. These tubular guiding devices are located at the extreme front corners of the main frame and on opposite sides of the kerf cutting unit so that irrespective of the direction of feeding movement transversely of the kerf cutter, the guiding devices will be in position to resist the feeding strains. During kerf cutting operations the neck 123 fits loosely in the parts to which connected as shown in Fig. 8, and likewise the screw 122 fits loosely in the nut 131; consequently the telescopic guiding devices will resist all the feeding strains during feeding movements. While the guiding devices are entirely separate and independent of the lifting mechanism, as shown in Fig. 4, such guiding devices are in the most efficient position to prevent feeding strains from being imparted to either the lifting screw mechanism or the tubular drive shaft 69, and consequently while the cutter bar is rigidly connected to the main frame by means of the two telescopic guiding devices, the vertical tubular drive shaft 69 may be most efficiently rotated without tendency toward binding even when the kerf cutting unit is in its most elevated position. Likewise, the lifting mechanism does not tend to bind and may be operated at intervals by increments during feed.

When the kerf cutting unit 21 is elevated, the cylinder 138 of each of the guiding devices will slide upwardly with respect to the cylinder 142 until its lower flange 144 engages the shoulder of the cylinder 142. Further upward movement of

the kerf cutting unit 21 would cause the cylinder 142 to be lifted with the cylinder 138 until the lower flange 145 engages the shoulder of the cylinder 143, whereupon the latter will be lifted. The limit of the upward sliding movement will be reached when the circular flange 146 of the cylinder 143 engages the annular shoulder of the cylinder 119, the latter being fixed to the main frame.

The mechanism for controlling the rotation of the vertical tubular shaft 124 of the kerf cutting elevating mechanism, is shown in Figs. 3 and 11. Extending upwardly into the splined tubular drive shaft 69 is a vertical shaft 147, the upper end of which is feathered to the internal splines of the tubular drive shaft 69 to permit relative longitudinal movement therebetween but to transfer the rotary movement of the tubular drive shaft 69 to the shaft 147 through the keys 148. Between the shaft 147 and the drive chain 137 I provide a friction clutch 149 comprising a clutch disk 150 having a hub 151 keyed to the lower end of the shaft 147. The lower end of the shaft 147 is provided with a hardened bearing pin 153 co-operating with a hardened bearing plate 154 set into a recess at the center of a lubricating cup 154' on top of the bottom plate 25.

A shiftable clutch element 155 is provided with a shipper in the form of a split ring 156 having trunnions 157, 157 which are journaled in the arms 158, 158 pivoted to a shaft 159 mounted upon bosses 160, 160 carried by the bottom plate 25, as shown in Fig. 11. The arms 158, 158 are rigidly attached to a bifurcated split bracket 161. A trunnion nut 162 co-operates with the bracket 161 and with the vertical threaded shaft 163, as shown in Figs. 6 and 11. By rotating the shaft 163, the arms 158, 158 will be rotated about the axis of the shaft 159 to control the application or release of the clutch 149.

Rigidly attached to the hub of the clutch element 155 is the sprocket 164 which receives the drive chain 137. The sprocket 164 is journaled on the bearing 165 carried by the lower tubular extension 166 rigidly attached to the bottom plate 107 of the top portion of the housing or gearing section 23, as shown in Fig. 3.

By referring to Fig. 6, it will be seen that the vertical threaded shaft 163 is mounted between the bottom plate 25 and the removable top plate 111 in position to be rotated by the hand wheel 166' which is keyed to the upper end of the shaft 163 and located outside of the main frame. Hardened bearing pin and plate means 167 is provided for the lower end of the shaft 163.

As shown in Fig. 1, the hand wheel 166' is located in close proximity to the motor control box 29. While the clutch controlled driving mechanism for the kerf cutter elevating apparatus is entirely enclosed within the main frame, the clutch 149 may be operated from without the main frame by rotating the wheel 166' in one direction or the other. The clutch 149 may thus be applied or released but the direction of elevation of the kerf cutting unit will depend upon the direction of rotation of the electric motor 26 which may easily be reversed at the motor control box 29.

The mechanism for driving the splined tubular shaft 69 from the armature shaft 27 is shown in Fig. 3. The armature shaft 27 extends through an opening 168 in the rear end wall 109 of the gear section 23. The shaft 27 carries a beveled pinion 169 which is keyed to the shaft 27 and is removably held in place by a nut 170 on a screw-threaded extension 171 at the inner end of the shaft 27.

In mesh with beveled pinion 169 and mounted for free rotation on the axis of the vertical splined tubular drive shaft 69, is a large dish-shaped bevel gear 172 provided with a hub portion 173 and a disk portion 173'. Secured to the hub portion 173, preferably by welding, is a sleeve or cylinder 174 splined to the outer side of the vertical tubular drive shaft 69.

The hub portion 173 of the dish-shaped bevel gear 172 is journaled to the bearing 175 carried by a downwardly extending cylindrical support 176 formed integral with the removable top plate 111, as shown in Fig. 3. The splined sleeve portion 174 at the center of the dish-shaped bevel gear 172 is splined to the vertical drive shaft 69 so as to impart rotation thereto when the motor shaft 27 is rotated. The splined connection between the bevel gear 172 and the vertical tubular drive shaft 69 permits the latter to have free vertical axial movement when the kerf cutting unit is adjusted in elevation. That is to say, provision is made for driving the cutter chain 58 from the motor shaft 27 regardless of the elevated position of adjustment of the kerf cutting unit 21.

A removable grease seal 177 may be provided at the top of the splined sleeve portion 174 to co-operate with the tubular drive shaft 69. Such grease seal is located on the gear section 23 at the place where the tubular shaft 69 emerges, as shown in Fig. 2.

It will thus be seen that motor operated mechanism is connected through the vertical tubular drive shaft 69 not only to the elevating mechanism but also to the kerf cutting unit. The chain cutter should always be driven in the same direction with any given setting of the cutter bits 59, but when the clutch 71 is released and the clutch 149 applied, the electric motor 26 may safely be operated in reverse directions in accordance with the direction of elevation of the kerf cutting unit desired.

In order to assure proper intermeshing of the bevel gear 172 with the pinion 169, I provide a pair of hold-down rollers 178, 178 as shown in Fig. 4. These rollers 178 engage the upper beveled surface of the gear 172 where its circumference is at the maximum. As shown in Figs. 12 and 13, each of the rollers 178 is supported by a stub shaft 179 carried by downwardly extending brackets 180 rigidly secured to the bottom of the removable top plate 111. The brackets 180 are each split as shown in Fig. 13 and provided with a clamping screw 181 to hold the stub shaft 179 in any adjusted position to which it may be adjusted by wrench-receiving sockets 182. The rollers 178 may be mounted upon the stub shafts 179 by means of ball bearings 183.

For the sake of compactness of operating parts and to maintain the overall length of the main frame at a minimum, I mount the feeding rope drum 184 within the top portion of the housing of the gear section 23, in a position where such rope drum will be concentric with the vertical axis of the tubular drive shaft 69. I also compactly locate planetary gear controlling mechanism within the hollowed out portion of the dish-shaped bevel gear 172 and even within the hollowed out portion of the feed drum 184 itself. The planetary gear control mechanism may be operated to effect rotation of the feed rope drum 184 either at a relatively slow feeding speed during kerf cutting operations, or at a relatively high handling speed

when the mining machine is to be moved quickly from one place to another.

As shown in Figs. 3 and 4, an eccentric 185 is keyed to the hub 173 of the bevel gear 172. Surrounding the eccentric 185 is a bearing 186 on which is journaled a gear 187. The gear 187 is connected by welding, as shown in Fig. 3, to a horizontal plate 188 which has a bifurcated extension 189 provided with a slot 190 slidable with respect to a roller 191 carried by a vertical stub shaft 192 secured to a stationary bracket 193 by a pin 194. The bracket 193 is secured by means of the machine screws 195 to the horizontal plate 118, as shown in Fig. 4. Lubricant may be introduced by way of the conduit 196 to the bearing surfaces between the roller 191 and the stub shaft 192, as shown in Fig. 3.

Cooperating with the gear 187 is a second gear 197 which is mounted upon a hub 198 by being welded thereto, as shown in Fig. 3. The hub 198 is spaced from the hub 173 of the dish-shaped bevel gear 172, by journal bearing 199. To the bottom of the hub 198 is welded, as shown in Fig. 3, a sun gear 200 concentric with the vertical axis of the tubular shaft 69. The sun gear 200 forms part of a planetary type of transmission as best seen by referring to Fig. 10.

Reverting to the power transmitting connections between the motor shaft 27 and the gear 197, it should be noted that rotation of the eccentric 185 will cause the gear 187 to walk around the gear 197 while meshing with the teeth thereof. The gear 187 will be held against rotation because of its being rigidly secured to the plate 188 by being welded thereto, as shown in Fig. 3. The plate 188 is held against rotation by the roller 191 on the stationary vertical shaft 192 which is rigidly secured to the plate 118. But by reason of the slot 190 co-operating with the roller 191, the plate 188 will be free to oscillate as required by the eccentric 185.

The gear 187 has fewer teeth than the gear 197. In the accompanying drawings, the gear 187 has fifty-five teeth and the gear 197 has fifty-eight teeth. Consequently for each rotation of the dish-shaped bevel gear 172 there will be a complete rotation of the eccentric 185. If this is in a clockwise direction, the gear 197 will be rotated a slight amount correspondingly. For instance, for each rotation of the eccentric 185, gear 197 will move $1\frac{55}{58}$ of a rotation, or $\frac{3}{58}$ of a rotation. Consequently the speed reduction between the gear 172 and the gear 197 will be 58 to 3.

It will of course be obvious that this reduced speed will be transmitted from the gear 197 directly to the sun gear 200 through the hub 198. The sun gear 200, as shown in Fig. 10, meshes with the four planetary gears 201 which are mounted upon four upstanding shafts 202 carried by a spider 203 mounted upon a cylindrical support 204 which is journaled upon the hub 205 of the feed drum 184, as shown in Fig. 3. The hub 205 is journaled on the bearing 206 carried by the cylindrical support 207, and the latter in turn welded to the bottom plate 107, as shown in Fig. 3.

Each of the vertical shafts 202 is provided with an upper bearing portion 208 which extends into a journal bearing for a roller 209. An integral annular flange 210 is provided on the shaft 202 at its upper end portion in position to support the roller 209. The rollers 209 are adapted to roll upon the outer surface of the hub 198. A spring-pressed wiping member 211 is provided adjacent the upper end of said shaft 202 to provide lubrication for the roller 209. Below the annular flanges 210, the vertical shafts 202 each extends through the hub of the brake drum 212 which is formed integral with the spider 203. This can readily be seen by referring to Fig. 10 which is a sectional plan view taken on the line 10, 10 of Fig. 3. A brake band 213 provided with a brake lining 214 is associated with the drum 212.

The planetary gears 201 are rotatably mounted with respect to the vertical shafts 202 by double antifriction roller bearings 215. Each of said planetary gears 201 is provided with a hub 216, to the upper portion of which the gear 201 is integrally attached, and to the bottom portion of which is attached a planetary gear 217. In other words, as shown in Fig. 3, the hub 216 carries both the planetary gear 201 and the planetary gear 217, and therefore both gears 201 and 217 always rotate together.

Planetary gears 217 mesh with a ring gear 218 rigidly secured to the interior of the operating drum 184. It will thus be seen that the planetary gear 201 meshes with the sun gear 200, that the planetary gear 201 is connected to the planetary gear 217, and the latter meshes with the gear 218 but is secured to the rope drum 184.

Not only do the planetary gears 201 mesh with the sun gear 200, but also with the ring gear 219 which is integral with the brake drum 220. The brake drum 220 is mounted upon a journal bearing 221 carried on the interior peripheral portion of the rope drum 184. Associated with the brake drum 220 is a brake band 223 provided with a lining 224.

By referring particularly to Fig. 10 of the drawings, it will be seen that the planetary gears 201 have fewer teeth than the planetary gears 217, the number of the teeth on each gear 201 being fourteen, and the number of teeth on each gear 217 being sixteen.

As will be described more fully hereinafter, the brake bands 213 and 223 are so interlocked that it will be impossible to clamp both of them at the same time, and a single operating mechanism is provided whereby when one of said brake mechanisms is applied, the other is released, and vice versa. The brake bands may also be so adjusted that neither will be applied, under which condition power will not be transmitted to the rope drum 184 from the motor shaft 27 but will be free to be rotated by the operator grasping the feed rope and pulling it out from the main frame of the machine and thereby freely rotating the rope drum.

By referring to Fig. 3 of the drawings, it will be seen that if the brake band 213 is applied to the brake drum 212 to hold the same stationary, the rotation of the sun gear 200 will be transmitted to the planetary gears 201 and 217. When the brake drum 212 is held stationary, the axes of the vertical shafts 202 will also be held stationary because they are mounted on the brake 212 to revolve around the vertical axis of the tubular shaft 69 only when the brake drum 212 is free to rotate.

At the time that the brake 213 is applied to the drum 212, the brake 223 is released and therefore the brake drum 220 is free to rotate. Rotation of the planetary gears 201 about the vertical stationary axes of the shafts 202, will be transmitted to the brake drum 220 but this will have no effect because the brake drum 220 at this time is free to rotate.

The rotation of the planetary gears 217, how-

ever, will effect rotation of the annular gear 218 which is secured as by welding to the inner side of the large rope drum 184. It will thus be seen that when the brake 223 is released from the brake drum 220 but the brake 213 is applied to the brake drum 212, rotation of the armature shaft 27 will rotate the sun gear 200, and the planetary gears 217 will be rotated on vertical stationary axes 202 to effect rotation of the rope drum 184 on the vertical axis of the tubular drive shaft 69.

The planetary gears 217, as shown in Fig. 10, are somewhat larger than the planetary gears 201, so as to secure a predetermined ratio of the number of teeth on the planetary gears 201 and 217. In Fig. 10 this ratio is illustrated as being 14 to 16. It will thus be seen that when the sun gear effects a complete rotation of each of the planetary gears 201, 14 teeth will be engaged, but 16 teeth of each of the planetary gears 217 will become effective in their meshing with the internal annular gear 218 which is secured to the inner wall of the rope drum 184. The transmission of power to the rope drum from the sun gear 200 will therefore be at a relatively fast speed when the brake 213 is applied to the brake drum 212 while the brake drum 220 is released. This relatively fast speed of rotation of the drum 184 is useful in handling the mining machine when it is to be moved from one place in the mine to another while the cutting mechanism is not cutting a kerf.

When the brake 213 is released and the brake 223 applied to the brake drum 220, a very slow feeding speed of rotation of the drum 184 will be secured. This feeding speed is used when the kerf cutter is cutting a kerf while the machine is being slid over the mine bottom by the feed rope 102 controlled by the retarding or guide rope 34.

When the brake 213 is released and the brake 223 applied to the brake drum 220, the latter together with its inner annular gear 219 will be held stationary. Since the brake drum 212 is free to rotate, the vertical shafts 202 are free to revolve about the vertical axis of the tubular drive shaft 69. Rotation of the sun gear 200 will cause rotation of the planetary gears 201 on the vertical bearings 202. Since the brake drum 220 is held stationary together with its gear 219, the planetary gears 201 will walk around the stationary ring gear 219.

In making a complete rotation, the planetary gears 201, each of which has 14 teeth, will have caused 16 teeth of each of the planetary gears 217 to mesh with the ring gear 218, because whenever any planetary gear 201 makes a complete rotation, the planetary gear 217 attached thereto will also make a complete rotation. In other words, while the planetary gear 201 walks around the stationary gear 219, the distance represented by 14 teeth, the planetary gear 217 will attempt to walk around the gear 219, the distance represented by 16 teeth. The difference of two teeth represents the distance which the rope drum will be rotated during each rotation of the planetary gear 217. That is to say, due to the difference in the number of teeth between the planetary gears 201 and 217, it will be necessary for the ring gear 218 to rotate in response to the sun gear walking the planetary gear 201 around the ring gear 219 while the latter is being held stationary by the brake 223 being applied to the brake drum 220.

The planetary gear mechanism shown in Fig. 3, controlled by the brakes applied to the brake drums 212 and 220, enables the power to be transmitted to the rope drum to rotate the same either at a fast handling speed or at a greatly reduced feeding speed. When both brake drums 212 and 220 are released by releasing the brakes 213 and 223, the rope drum 184 will be free to rotate so that the rope 102 on the rope drum 184 may be pulled out manually from the machine for the purpose of connecting it to an anchorage in the mine distant from the machine.

When power is transmitted to the rope drum 184 to rotate the same, a wide range of speeds of rotation of this rope drum may be obtained by partially applying either of the brakes 213 or 223 to the brake drums 212 and 220, so that slipping may occur between the brake drums and the brake linings 214 and 224. It should be understood, however, that when one brake is applied the other is released.

The mechanism for operating the brake bands 213 and 223 so that both may be released at the same time or either applied while the other is released, is shown particularly in Figs. 4, 6 and 7. The construction for applying one of the brake bands is substantially the reversal of the construction for applying the other brake band. Upon the horizontal supporting plate 118 is secured, by means of machine screws 118', 118', a casting 326 having a pair of integral brackets 225 and 226. The left-hand bracket 226 as viewed in Fig. 6 is provided with an adjustable stop screw 227 which co-operates with a spring-pressed lug 228 carried by one end of the brake band 213, the other end of which carries a lug 229 adapted to be received by spaced abutment means 230 carried by a slide plate 231. The lug 228 is held against the stop screw 227 by a spring 232 co-operating with the stationary abutment 233 carried by the stationary casting 326. It can readily be seen by referring to Figs. 6 and 7, that if the slide plate 231 is moved to the left, the brake band 213 will be applied to the brake drum 212, and if the slide 231 is moved to the right, as viewed in Fig. 7, the brake band 213 will be released. In other words, when the slide 231 is moved toward the left, the abutment means 230 will engage the lug 229 to apply the brake band 213 to the brake drum 212, while the lug 228 is held by the spring 232 against the adjustable screw stop 227 carried by the stationary bracket 226 which is integral with the casting 326 and the latter secured rigidly to the horizontal supporting plate 118.

It should be noted that Fig. 6 is a section taken on the line 6—6 of Fig. 4, looking in the direction of the arrows. Extending into the lower portion of the bracket 225 is a horizontal adjustable stop screw 234 which corresponds in function to the stop screw 227 but is associated with the mechanism for applying the brake band 223, whereas the stop screw 227 is associated with the mechanism for applying the brake band 213. As shown in dotted lines in Fig. 6, a lug 229' extends from one end of the brake band 223 into a recess between abutment means similar to that designated 230 in Fig. 7. Also as shown in dotted lines in Fig. 6, a spring 232' is associated with a lug 228' and the latter held by the spring 232' against the stop screw 234.

By reason of the reverse arrangement of the mechanism for operating the brake band 223, the slide plate 231 is moved to the left as viewed in Fig. 7 to apply the brake band 213 to the brake drum 212, but this slide is moved toward the right as viewed in Figs. 6 and 7 to effect the ap-

plication of the brake band 223 and at the same time release the brake band 213. It will thus be seen that whenever the slide 231 is moved in one direction to apply one brake band, the other will be released, and the interlocking is such that both brake bands can not be applied at the same time.

As shown in Fig. 6, a horizontal plate 316 secured to the walls 110, 110 is provided to serve as a slide bearing for the slide plate 231. By means of appropriate bracket plates 235, 235, as shown in Fig. 7, and by overhanging guide bracket 335 integral with the casting 326, the slide plate 231 will be provided with suitable guiding devices to maintain the slide plate 231 in a rectilinear, oscillatory path of travel. Oscillatory movement may be imparted to the slide 231 to apply either the brake band 213 or the brake band 223, by means of a pitman 236 pivotally attached to the slide 231 by means of a keyed pin 237. As shown in Fig. 4, the pitman 236 is pivoted eccentrically at 238 to a rotary cylinder 239 mounted in appropriate bushings in a cup 240 rigidly secured to an extension of the casting 326, as shown in Fig. 4. The upper end of the cup 240 may be provided with lubricating packing 241 (Fig. 6).

Secured to the cylinder 239 intermediate its ends is a worm gear 242 which meshes with a worm 243 (Fig. 4) carried by a shaft 244 extending through the adjacent vertical frame plate 110. The shaft 244 is journaled in the roller bearings 246, 246 carried by the removable tubular support 245. Keyed to the shaft 244 outside of the frame of the machine is an operating handle 247 located adjacent to the horizontal wheel 166' and also adjacent the motor control box 29, as shown in Fig. 1.

As may be seen by referring to Fig. 1, a single operator standing on the leading side of the machine may have within his reach the wheel 166' for controlling the elevation of the kerf cutting unit, the reversing switch lever 31 for controlling the direction of rotation of the motor 26, the control lever 32 for effecting the starting and stopping of the electric motor 26, and the wheel 247 for controlling the speed of movement of the machine when slid over the mine floor by rotation of the drum 184 exerting a pull on the rope 102 while its free end is anchored to the machine and an intermediate portion of the rope 102 reeved through a pulley connected to an anchorage in the mine, distant from the machine. When the hand wheel 247 is moved to a neutral position, both of the brake bands 213 and 223 will be released and no power will be transmitted from the motor 26 to the rope drum 184, but the latter will be free to be rotated by the manual pulling out of the rope 102. Upon rotating the hand wheel 247 in one direction, the rope drum will be rotated at a fast or handling speed when the machine is to be moved about the mine from place to place. During handling operations the rope 102 becomes a haulage rope and may be extended around the vertical rollers 38 and 39 and thence reeved through the pulley 33 so that when the free end of the rope 102 is connected to an anchorage in the mine and the rope drum 184 operated by the motor 26, the whole machine may be slid over the mine bottom rearwardly and longitudinally.

It should also be understood that the rope 102 may be connected to the rope drum 184 and mounted thereon in either direction, depending upon the direction of feeding movement of the mining machine. When the feed is opposite to that shown in Fig. 1, the cutter bits 59 should be reversed and the guide rope 34 extended in an opposite direction to an anchorage in the mine.

Not only have I completely enclosed all of the operating parts shown in Fig. 3, within the housing of the main frame, except for the openings 248 and 249 for the rope 102, but I have also provided planetary gear mechanism to secure great reduction in speed and variation in speed of transmission to the rope drum 184 although employing a rope drum of relatively large diameter, which has the advantage of prolonging the life of the feed rope 102 by reducing to a minimum the necessary bending thereof. The pull on the guide rope 34 is relatively small but the pull on the feed rope 102 during coal cutting operations is relatively very large and consequently it is desirable to use a very strong feed rope 102 and prolong its life by reducing to a minimum the necessary bending thereof.

The openings 248 and 249 shown in Fig. 2 may be provided on both sides of the machine, and likewise a guide pulley 251 may be provided on that side of the machine opposite to the guide pulley 250.

When the cutter bits 59 are arranged as shown in Fig. 1, and the feed and guide ropes 102 and 34 are arranged as shown in this view, the direction of feeding movement will be in accordance with the direction of the arrow 252, with the rope drum 184 operating in a clockwise direction as viewed in plan. While the brake 223 is applied and the brake 213 released, the sun gear 200 will transmit to the rope drum 184 a slow feeding speed.

During the feed of the kerf cutting mechanism in the direction of the arrow 252 of Fig. 1, the retarding rope drum mechanism 35 will pay out the rope 34 as permitted by the slipping of the partially applied clutch or brake elements 47, 49 as controlled by the wheel 52. To reduce the overall length of the main body of the machine when fed between an elongated conveyor and the coal face, the direction pulley 33 may be detached from the rear side of the motor section 22 by removal of the cotter pin 253 shown in Fig. 5.

When the feed rope 102 is extended from the machine and its intermediate portion reeved through a pulley on a snatch block connected to a roof jack at a point in the mine distant from the machine, it should be understood that the elevation of such snatch block may be adjusted vertically along the roof jack so as to cooperate with the anchorages of the free end of the rope to the machine, in securing the desired balanced pulls on the lower and upper portions of the mining machine structure considered as a whole.

When sumping operations are to be performed in the working face adjacent to the rib, the feed rope 102 is disconnected from its anchorage 100 shown in Fig. 1, and the rope 102 is reeved around the rollers 38, 39, pulley 33, roller 36, and pulley 251, and the free end of the rope 102 connected to an anchorage between the cutter bar and the rib. The retarding rope 34 is then preferably extended from that side of the machine opposite to that shown in Fig. 1 and so connected to such anchorage in the mine near the rear end of the machine, as to enable the controlling mechanism shown in Fig. 5 to cause such retardation of the rope drum 44 as to co-operate with the sumping of the kerf cutter into the coal face, first at an angle to the rib and then parallel thereto when the sumping cut is completed. After such sump-

ing cut has been made, the connections of the ropes 102 and 34 may be restored to the position shown in Fig. 1, whereupon the feed of the kerf cutter may continue from the sumping cut, in the direction of the arrow 252. A lateral extension 338 from the lower bracket 339 (Fig. 1) may be used to prevent the feed rope 102 from running off the roller 36.

It should be particularly noted that the dish-shaped support 173' for the large bevel gear 172 not only provides ample space for the planetary gear brake mechanism beneath and within the same, but also eliminates additional gearing meshing with the bevel pinion 169 while the shaft 27 is maintained in a relatively low position so that the bottom of the motor section 22 may make direct sliding contact with the mine bottom while rigidly connected to the gear section 23, as shown in Fig. 2.

Obviously those skilled in the art may make various changes in the details and arrangement of parts without departing from the spirit and scope of the invention as defined by the claims hereto appended, and I therefore wish not to be restricted to the precise construction herein disclosed.

Having thus described and shown an embodiment of my invention, what I desire to secure by Letters Patent of the United States is:

1. In a mining machine, the combination with a frame, of an operating drum mounted thereon for rotation, a motor, means for driving said operating drum from said motor comprising a gear mounted against rotation and adapted to walk around another gear, a planetary mechanism including two brake drums, means for restricting rotation of said brake drums alternately, and means constructed and arranged to rotate said operating drum at a relatively fast speed when one drum is restricted, and at a relatively slow speed when the other drum is restricted.

2. In a mining machine, the combination with a frame, of a motor carried thereby, a feed drum mounted for rotation on a vertical axis intermediate the frame side and ends, drive means for said drum including a large dished drive gear intermeshing a pinion driven from said motor, said gear being positioned above said drum with the open side facing downwardly, and planetary gearing mechanism connecting said drum and drive gear and positioned above said drum and at least partially within said gear, said drum having a smaller diameter than that of said large gear and being positioned with its topmost portion above and axially inwardly of the bottom of said pinion.

3. In a mining machine, the combination with a frame, of a drum mounted thereon, said drum being dish shaped, a dish shaped drive gear of larger diameter than said drum, a motor and an intermeshing pinion for driving said gear, and speed reduction mechanism connecting said gear and drum, said gear and drum cooperating to form a housing for said speed reduction mechanism due to their complementary dish shapes, said drum having its topmost portion above the bottommost portion of said pinion.

4. In a mining machine, the combination with a frame, of a dish shaped gear mounted for rotation on a vertical axis, a drum mounted on said axis and below said gear, an eccentric driven by said gear and housed within it, a toothed gear driven in an eccentric motion by said eccentric, means for holding said toothed gear against rotation while allowing said eccentric motion thereof, an internally toothed gear meshing with said toothed gear and having a greater pitch diameter and more teeth, means for driving said dished gear to cause said internally toothed gear to rotate at a reduced speed, and means connecting said internally toothed gear to said drum.

5. In a mining machine, the combination with a frame, of a drum mounted for rotation on said frame, said drum being dished between its hub and face, and means for driving said drum including a planetary gear mechanism at least part of which is housed in said dished drum and positioned between the hub and face thereof.

6. A compact speed reducing mechanism comprising a rotating gear, a planetary gear mechanism including a sun gear connected with said rotating gear, an eccentric, said rotating gear, sun gear and eccentric being all mounted to rotate on a common axis, gear holding means, and another gear connected to be driven in an eccentric movement by said eccentric while being held against rotation by said gear holding means, said rotating gear and other gear having meshing teeth, one of said two last mentioned gears having internal teeth and the other external teeth.

7. In a device of the class described, the combination with a drum, of a means for driving said drum including a large gear rotatable on an axis concentric therewith, speed reducing mechanism interconnecting said gear and said drum including a planetary gear mechanism having a sun gear rotatable on said axis, and drive means for said sun gear including a pair of intermeshing gears one of which is internally toothed and the other externally toothed, means holding one of said pair of gears against rotation, the other driving said sun gear, and an eccentric mounted for rotation on said axis and imparting an eccentric motion to said one gear which is held against rotation.

8. In a device of the class described, the combination with a drum, of a means for driving said drum including a pair of gears one of which is internally toothed, the other of which is inside said one gear, has fewer teeth, and is externally toothed and meshing therewith, means including an eccentric for causing one of said gears to walk around the other while being held against rotation thereby causing said other gear to rotate, and a two speed planetary gear mechanism interconnecting said rotating gear and said drum.

9. Rope drum feeding mechanism for a mining machine comprising a supporting frame, a rope drum, an internal gear carried by said rope drum, a brake drum having an internal gear, a plurality of pairs of planetary gears meshing with said internal gears, an additional brake drum, mechanism for supporting said planetary gears on said additional brake drum for bodily rotation therewith or for rotation on their own axes relatively to said additional brake drum, brake mechanism associated with said brake drums, interlocking mechanism for operating the brake mechanism associated with either brake drum while the brake mechanism associated with the other brake drum is held released, and motor operated mechanism connected to said planetary gears to drive the same to effect either relatively fast rotation of said rope drum or relatively slow rotation thereof dependent upon the application of the aforesaid brake mechanisms.

10. In a device, of the class described, the combination with a drum, of means for driving said drum including a rotating gear, a planetary gear

mechanism including a sun gear connected with said rotating gear, an eccentric, said drum, rotating gear, sun gear and eccentric being all mounted to rotate on a common axis, gear holding means, and another gear connected to be driven in an eccentric movement by said eccentric while being held against rotation by said holding means, said rotating gear and other gear having meshing teeth, one of said last mentioned gears having internal teeth and the other external teeth.

11. In a device of the class described, the combination with a drum, of means for driving said drum including a planetary gear mechanism having a sun gear rotatable on the axis of said drum, and drive means for said sun gear including a pair of intermeshing gears one of which is internally toothed and the other externally toothed, means holding one of said pair of gears against rotation, the other driving said sun, and an eccentric mounted for rotation on said axis and imparting an eccentric motion to said one gear which is held against rotation.

12. In a device of the class described, the combination with a drum, of means for driving said drum including a planetary gear mechanism having a sun gear rotatable on the axis of said drum, and drive means for said sun gear including a pair of intermeshing gears one of which is internally toothed and the other externally toothed, means holding one of said pair of gears against rotation, the other driving said sun, and an eccentric mounted for rotation and imparting an eccentric motion to said one gear which is held against rotation.

13. In a mining machine, the combination with a frame, of an inverted dish shaped gear mounted on said frame for rotation, a pinion meshing with said gear for driving it, a motor connected to drive said pinion, an upright dish shaped drum mounted to rotate coaxially with said drum, and speed reduction mechanism comprising planetary gearing having a sun gear mounted for rotation on the axis of said drum and dish shaped gear connecting said drum and gear, said drum and gear having their nearest peripheral points close together to provide a housing for said speed reduction mechanism, said peripheral spacing being less than the minimum diameter of said pinion.

14. In a mining machine, the combination with a frame, of an inverted dish shaped gear mounted on said frame for rotation, a pinion meshing with said gear for driving it, a motor connected to drive said pinion, an upright dish shaped drum mounted to rotate coaxially with said drum, and speed reduction mechanism connecting said drum and gear, said drum and gear having their nearest peripheral points close together to provide a housing for said speed reduction mechanism, said peripheral spacing being less than the minimum diameter of said pinion.

15. In a mining machine, the combination with a frame, of a drum journaled to said frame, said drum being dished between its hub portion and its peripheral portion, an internal ring gear within said drum at its peripheral portion, a relatively large gear having a hub portion closely adjacent the hub portion of said drum, said large gear being dished between its hub portion and its peripheral portion to face the dished side of said drum, and power-transmission mechanism between the hub portion of said gear and the ring gear at the peripheral portion of the drum, such power-transmission mechanism comprising planetary gears in the dished portion of the drum and driving mechanism connected between said planetary gears and the hub portion of the gear, the construction and arrangement being such that the power-transmission mechanism surrounds the closely adjacent hub portions of the gear and drum and is confined within the space afforded by the dishing of the drum and gear.

16. In a mining machine, the combination with a casing, of a bearing within the same depending from the top thereof, a gear journaled on said bearing closely adjacent the underside of the top of said casing, a drum mounted within said casing to rotate on an upright axis concentric with the axis of rotation of said gear, and power-transmission mechanism between the hub portion of said gear and the internal peripheral portion of said drum, said drum being dished to house a portion of such power-transmission mechanism.

17. In a mining machine, the combination with a casing, of a bearing depending from the top thereof within the casing, a driving gear journaled on said bearing adjacent to the underside of the top of said casing, a driven element connected to the hub portion of the gear and extending upwardly within said bearing, a drum mounted within said casing to rotate on an upright axis concentric with the axis of rotation of said gear, and power-transmission mechanism between the hub portion of said gear and said drum.

18. In a mining machine, the combination with a casing, of a cylindrical bearing depending from the top of said casing to project downwardly into the same, a gear journaled to said bearing closely adjacent the underside of the top of said casing, a driven element connected to the hub portion of said gear and extending upwardly into said cylindrical bearing, a drum, a cylindrical bearing projecting upwardly from the bottom of the casing with the drum journaled on such upwardly projecting bearing for rotation concentrically with the rotation of the gear with the lower side of the drum closely adjacent the bottom of the casing and with the hub portion of the drum closely adjacent the lower end of said driven element, and power-transmission mechanism between the said gear and said drum, said drum being dished on its upper side to receive a portion of such power-transmission mechanism the remainder of which surrounds the hub portion of the gear.

19. In a mining machine, the combination with a gear casing limited in height and adapted to rest on and slide over a mine bottom, of a bearing depending from the top of said casing, a gear journaled on said bearing adjacent the lower side of the top of said casing, a drum, a journal bearing for mounting said drum at the lower interior of said casing concentric with said gear, and power-transmission mechanism between the hub portion of said gear and the inner peripheral portion of said drum, said drum being dished at its upper side for receiving a portion of said power-transmission mechanism to enable the latter and said gear and said drum to occupy the limited space within the casing of limited height.

20. In a mining machine, the combination with a casing, of a depending journal bearing within the upper interior of said casing, an upwardly extending journal bearing within the casing, a gear journaled on the depending bearing, a drum journaled on the upwardly extending bearing concentric with said gear, two annular gears within the periphery of said drum in the dish-shaped upper side, planetary gears within such dish-

shaped upper side and associated with said annular gears one of which is secured to said drum to rotate therewith and the other of which is journaled to the drum to rotate relatively thereto, driving gearing connected between said first-named gear and said planetary gears, brake mechanism connected to said planetary gears to hold the same against revolution around said upwardly extending bearing and thereby effect relatively fast rotation of said drum when said driving gearing is operated, and brake mechanism associated with said journaled annular gear to hold the same stationary when the first-named brake mechanism is released and thereby effect relatively slow rotation of the drum, the construction and arrangement being such that when both brake mechanisms are released the drum will be freed for rotation by manual pull on a rope connected to and wound on the drum.

21. In a mining machine, the combination with a supporting frame, of a drum carried thereby for rotation relatively thereto and adapted to have a feed rope connected thereto and wound on the periphery thereof, said drum being annularly open on one side within such periphery, planetary gearing connected to the inner annular periphery of said drum and located in the opening in one side of the drum within the inner and outer peripheries of said drum, and power-transmission mechanism connected to said planetary gearing at one side of said opening to have a circular driving path of travel concentric with said drum and spaced from its axis of rotation.

LEWIS E. MITCHELL.