June 18, 1929. T. J. FOSTER 1,717,444

BUILDING CONSTRUCTION

Filed Sept. 22, 1927 2 Sheets-Sheet 1

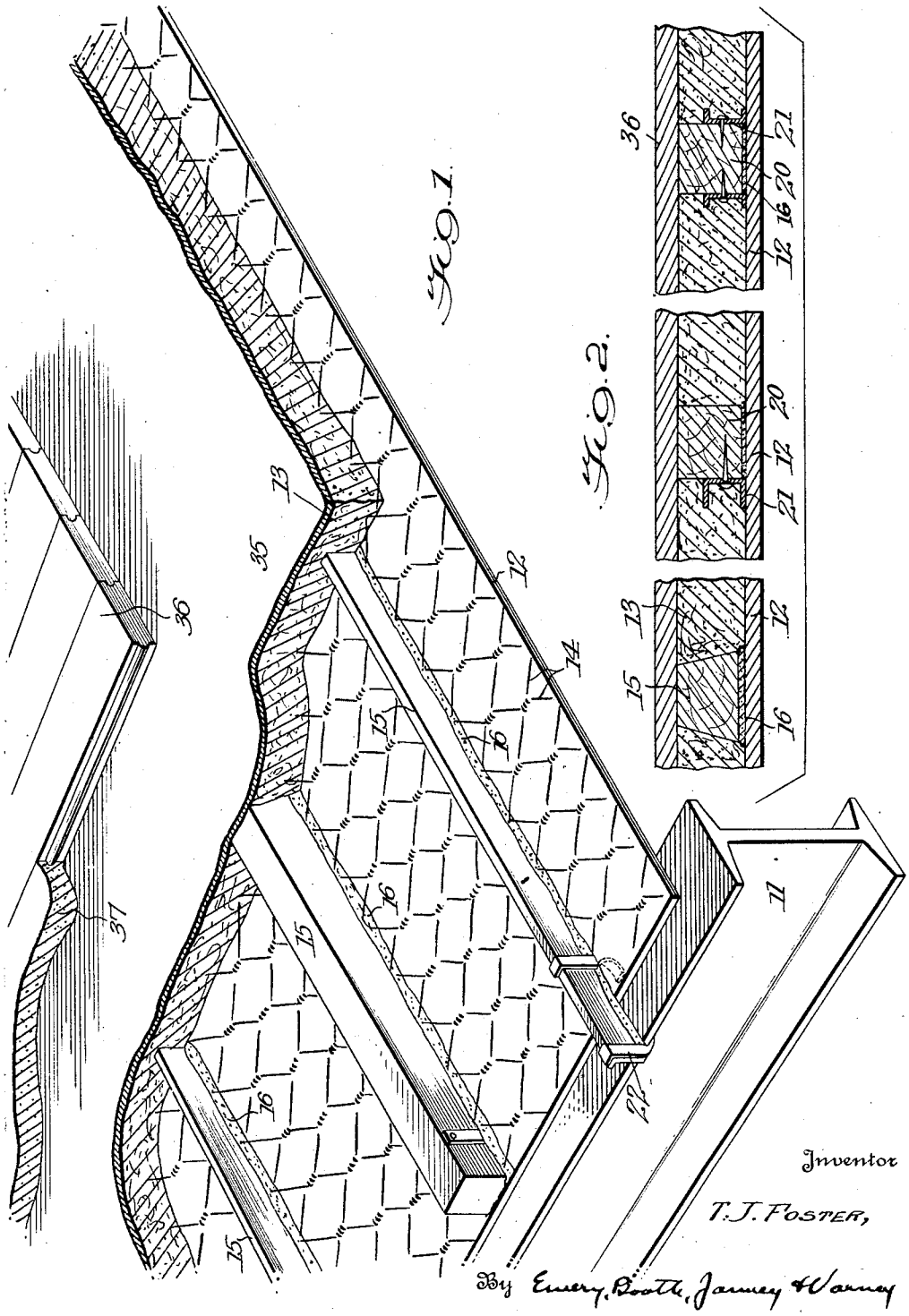

June 18, 1929. T. J. FOSTER 1,717,444

BUILDING CONSTRUCTION

Filed Sept. 22, 1927 2 Sheets-Sheet 2

Fig. 3.

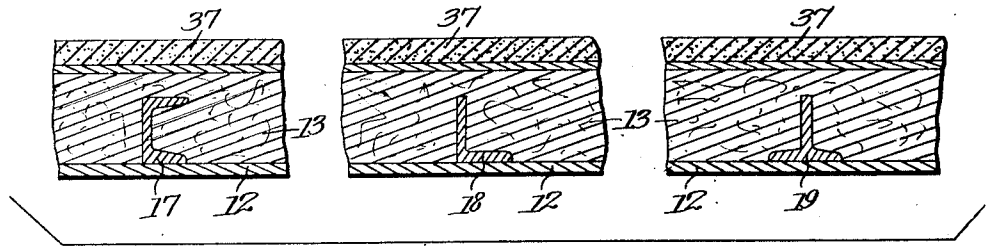

Fig. 4.

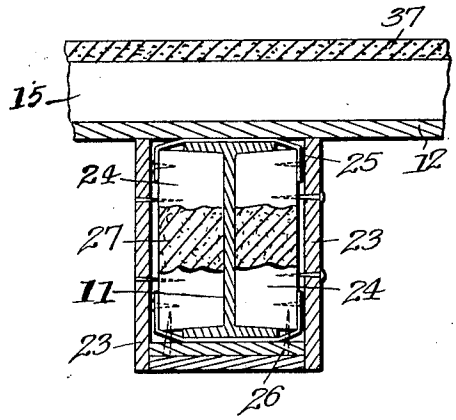

Fig. 5.

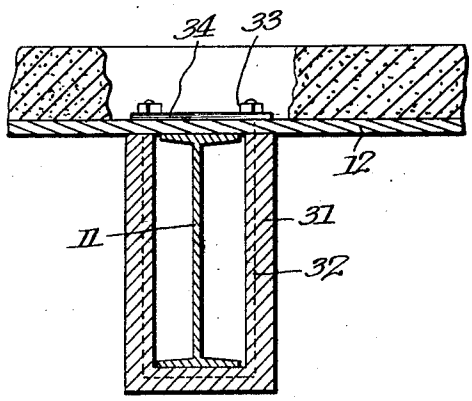

Fig. 6.

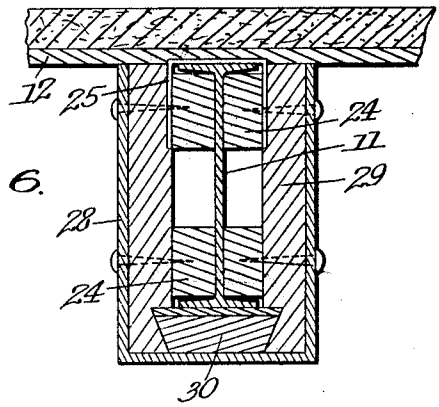

Inventor

T. J. FOSTER,

By Emery, Booth, Janney & Varney

his Attorneys

Patented June 18, 1929. 1,717,444

UNITED STATES PATENT OFFICE.

THOMAS J. FOSTER, OF RIDGEWOOD, NEW JERSEY.

BUILDING CONSTRUCTION.

Application filed September 22, 1927. Serial No. 221,347.

This invention relates to building construction, more particularly to floors and roofs, although it is applicable to walls and partitions, and other uses for which fire resisting materials are desirable.

The invention aims to provide a light, strong, heat and sound proof, fire resisting construction which may be erected easily and rapidly without centering and at reasonable cost.

Further objects of the invention appear hereinafter in connection with the description of the several embodiments illustrated in the accompanying drawings, wherein

Fig. 1 is a perspective view of a floor embodying the invention, showing the various steps or stages in the construction;

Fig. 2 is a cross-section through a floor slab at right angles to the direction of the reinforcing strips, showing several varieties of reinforcing and nailing strips suitable for a floor having wood finish.

Fig. 3 is a similar view of a floor having a cement or composition finish;

Fig. 4 is a cross-section through a floor embodying the invention taken at right angles to a supporting beam, showing a preferred form of beam encasement; and

Figs. 5 and 6 are similar views illustrating other forms of beam encasement suitable for use with a floor slab embodying the invention.

The invention is illustrated as applied to a floor supported upon light weight beams 11, the spacing being from two to three feet or more as is customary in apartments and offices and other buildings of the fire-proof type subjected to light floor loads. Any type of beam may be used for this purpose, either the fabricated or solid rolled beams being suitable; but they should not be so heavy as to require to be spaced further apart than the width of the plaster boards 12 forming the under face of the floor slab.

The floor slab is composed of suitable sound resisting or sound and fire resisting sheets or boards 12, such as sheet rock, gypsum boards, etc. commonly used for partitions and ceilings, which are laid across the supporting beams 11 and insulate them from the floor above as described in my Patents Nos. 1,582,172 and 1,582,173, dated April 27, 1926, and which in turn support the floor filling 13 of heat and sound insulating material. (See Fig. 1). This floor filling is preferably a light, fire resisting composition, either dry granular or plastic in nature, and does not need to be strong or even self sustaining because it does not constitute a part of the load carrying structure of the floor.

Suitable filling materials are plaster and asbestos, cellular gypsum, insulex, magnesia, and loose non-combustible earthy materials, such as sand, clay and crushed slag or dry cinders. As these materials have little structural strength and some are not very cohesive, a layer of chicken wire 14 or other reinforcing or binding material may be embedded or spread over the filling and partly embedded therein to hold the filling in place, as illustrated in Figs. 1, 2, and 3. This is particularly advantageous in giving strength to the slab in moving it to the building site and in placing it in position.

The slabs may be precast, and if made of a wet material like cellular gypsum, it is preferable to dry them before installation in the building. The slabs should be kept dry during the construction of the building, and this may be accomplished by covering them with a waterproofing sufficient to exclude the moisture from them for some weeks. This cheapens the cost of the building by allowing floors and roof to be laid without waiting for the slabs to dry out, and improves the construction by insuring that the floor finish and finished roof be put on dry slabs. Otherwise moisture would have difficulty in getting out of the slabs after the floor waterproofing, roofing felt and finished roof was put on.

The floor supporting sheets 12 are stiffened to give them sufficient strength and rigidity to support the floor filling 13 and floor finish by ribs or bars 15, of wood or metal which are secured flat against the floor sheets for their entire length, by means of suitable adhesive 16, such as asphaltum, or other sticky non-combustible material, that retains its adhesive properties for an indefinite period. These bars 15 may be made the full depth of the fill and used to support the floor finish as shown in Fig. 2, particularly if the latter be wood, or they may be shallower and covered by the fill, as shown in Fig. 3, wherein channels 17, angles 18 and T's 19 are illustrated. In many cases it may be desirable to use wood strips 20 reinforced with one or more metal bars 21 of channel or other shape, as illustrated in Fig. 2. Clips 22 may be secured to the bars 15 at their ends adjacent to the supporting beams, and bent down under the flanges of the latter to secure the

bars and floor sheets in place, as illustrated in Fig. 1.

My ribbed supporting sheet construction enables a loose dry filling material having little or no structural strength to be utilized for deadening the sound vibrations in the structure, and the combination of insulated sheets and non-conducting filling makes a quite sound-proof floor impossible to secure with more dense materials.

Any suitable means for covering and protecting the beams may be attached to the under side of the floor. For example, as shown in Fig. 4, sheets 23 of plaster board or other fire resisting material are nailed to spacing blocks 24 secured on the sides of the beam by means of metal strips 25 at top and bottom, and soffit strips 26 are nailed thereto for protecting the under side of the beams. This construction permits of filling the spaces between the blocks 24 and beneath the lower flanges of the beams with light fire resisting composition 27 to furnish better protection to the beams in case of fire in the room below.

In Fig. 6 the beam protection comprises plastic board strips 28 to which an insulating lining 29 has been secured by casting thereon prior to erecting them in place. This construction permits securing the soffit strips 30 by means of grooves or rabbets in the lower inside faces of the side strip lining 29 in which the edges of the soffit strips engage, and provides sufficient protection from fire without any filling of fire proofing material between the concrete and the metal.

In Fig. 5 the beam protection is afforded by cast insulation in the form of channels 31, which may be secured to the under side of the floor slab by means of metal straps or hangers 32 embedded in the channels and having their upper ends projecting through the sheets 12 and anchored by any suitable means. Nuts or keys 33 engaging the upper ends of the hangers and seated on washers or straps 34 provide secure and convenient means for supporting the channel beam encasement members.

Various modes of procedure may be used in erecting floors, roofs, walls, etc. embodying the invention. Preferably before erection the materials are assembled, and the supporting sheets 12 and stiffening members 15 are rigidly secured together by dipping the latter in the adhesive 16 and letting them set until the adhesive is hard. For some purposes it is desirable to place the retaining wire 14 and filling 13 prior to erecting the slab in the structure; or they may be placed after erection. The latter is preferable in floors having pipes or conduits embedded in the filling. The clips 22 are secured under the beam flanges after the sheets are assembled in place.

Over the filling 13 a continuous layer of felt 35 may be laid, and covered by the flooring 36 or cement or other finish 37. For roofs, the felt 35 may be waterproofed and covered with any of the roofing finishes used for flat or sloping roofs. Fastening the strengthening ribs to the sheets in the manner described stops the vibration in the ribs so that sound will not be conducted through them, thereby eliminating any direct means for conducting sounds from the room above to the room below or vice versa. The sheets 12 on the under side of the completed floor or roof make a satisfactory finish for many structures, and may be painted or plastered if desired.

A roof constructed as described is inexpensive, light in weight, heat and sound proof, and atmospheric conditions will not cause condensation of moisture on the under side. The supporting beams 11 may be spaced far enough apart to utilize their full strength, and the stiffened sheets will support the weight of workmen and materials during construction. There is no material in the roof slab to rust if not painted, or to cause condensation of moisture on the under side.

Advantages of the invention over existing types of floors and roofs are its heat and sound insulating properties, combined with light weight and cheapness of construction. In these respects it is superior to types of construction having slabs made of more dense materials, which require centering for their erection, or metal reinforcements to enable them to carry parts of the floor load, and which are poor insulators of heat and sound.

The invention is not restricted to the detail construction illustrated.

What I claim and desire to secure by Letters Patent is as follows:

1. A floor or roof construction composed of light weight beams spaced apart and supporting a slab comprising rigid sheets of insulating material, said sheets having spaced stiffening members adhesively secured upon one side thereof, an insulating filling embedding said stiffening members, and means for securing said sheets and stiffening members to said beams.

2. A floor or roof construction composed of light weight beams spaced apart and supporting a slab comprising rigid sheets of insulating material, said sheets having spaced stiffening members adhesively secured upon one side thereof, an insulating filling embedding said stiffening members, means for securing said sheets and stiffening members to said beams, beam encasement members comprising sheets of insulating material secured around said beams, and non-combustible filling material between said encasement members and said beams.

3. A floor or roof construction composed of light weight beams spaced apart and sup-

porting a slab comprising rigid sheets of insulating material, said sheets having spaced stiffening members adhesively secured upon one side thereof, an insulating filling embedding said stiffening members, means for securing said sheets and stiffening members to said beams, beam encasement members of insulating material secured around said beams, and a finish layer over said filling and insulated thereby from said beams.

4. A floor or roof construction composed of light weight heat and sound conducting beams spaced apart and spanned by floor supporting sheets of heat and sound insulating material extending in a substantially continuous layer over and between said beams, sheets of similar heat and sound insulating material encasing the sides and lower flanges of said beams and supported therefrom, a floor filling of heat and sound insulating material upon said floor supporting sheets, floor supporting members embedded in said filling, and a finished floor overlying said filling.

5. A floor or roof construction composed of light weight heat and sound conducting beams or rafters spaced apart and spanned by floor supporting sheets of heat and sound insulating material extending in substantially continuous layer over and between said beams, a floor filling of heat and sound insulating material upon said floor supporting sheets, floor supporting members embedded in said filling, a layer of waterproofing overlying said filling, and a finished floor overlying said waterproofing and filling.

6. A floor or roof construction composed of light weight supports 11, sheets 12 spanning said supports and constituting a continuous heat and sound proof insulation between said supports and the upper surface of said floor or roof, a filling 13 of light fire resisting material carried by said sheets, reinforcing means 14 for retaining said material, and a top layer 36 of weather and wear resistant material forming a protective finish for said construction.

7. In a heat and sound proof building construction comprising spaced beams or rafters, rigid sheets of cementitious material carried by said beams or rafters, said sheets having spaced supporting members adhesively secured upon one side thereof to constitute self supporting units during and after erection, an insulating filling embedding said supporting members, and means for retaining said filling in place, said retaining means being secured upon said sheets by said supporting members.

8. In a heat and sound proof building construction comprising spaced beams or rafters, rigid sheets of cementitious material carried by said beams or rafters, said sheets having spaced supporting members adhesively secured upon one side thereof to constitute self supporting units during and after erection and an insulating filling of porous non-combustible material upon said sheets and embedding said supporting members.

9. In a heat and sound proof building construction comprising spaced beams or rafters, rigid sheets of cementitious material carried by said beams or rafters, said sheets having spaced supporting members adhesively secured upon one side thereof to constitute self supporting units during and after erection, and an insulating filling of porous non-combustible material upon said sheets and embedding said supporting members, and a layer of waterproofing material on said filling.

10. In a heat and sound proof building construction comprising spaced load carrying members, sheet-like insulating material supported on said load carrying members and having its stiffness increased by ribs adhesively secured thereto, an intermediate layer of non-heat and sound-conducting light weight material of inconsiderable strength embedding said ribs, and means for retaining said light weight embedding material in place.

11. In a floor or roof construction comprising spaced beams, unitary slabs supported on said beams and overlying their top flanges, said slabs being composed of self sustaining insulating sheets reinforced with stiffening members adhesively secured thereto and embedded in cellular plastic material, substantially as described.

In testimony whereof, I have signed my name to this specification.

THOMAS J. FOSTER.