July 9, 1940. L. GUILD 2,207,512

WRIST WATCH CASE

Filed July 30, 1938

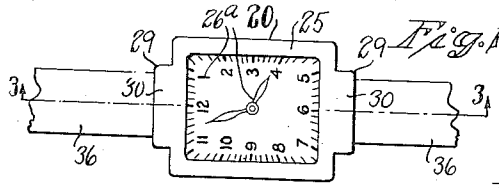
Fig. 1.

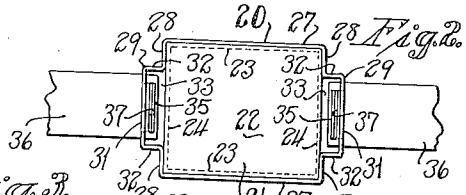
Fig. 2.

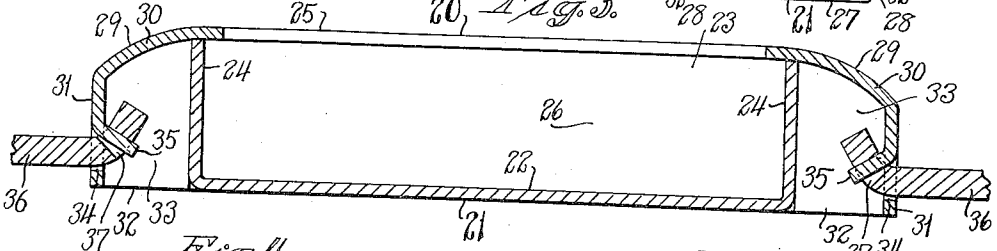
Fig. 3.

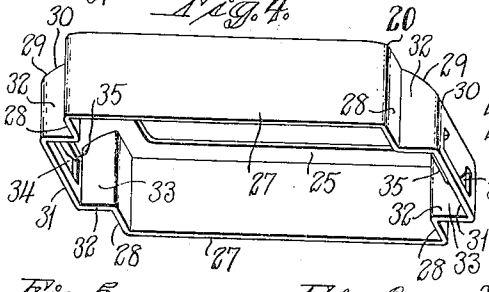
Fig. 4.

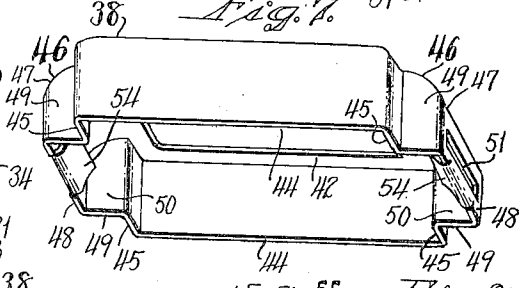
Fig. 7.

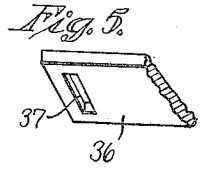
Fig. 5.

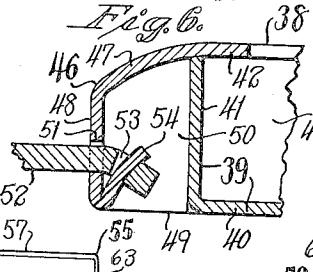
Fig. 6.

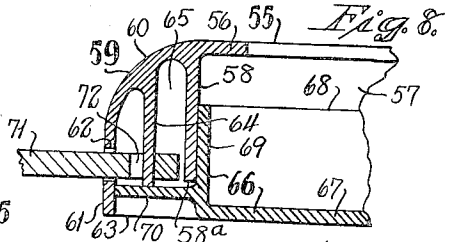
Fig. 8.

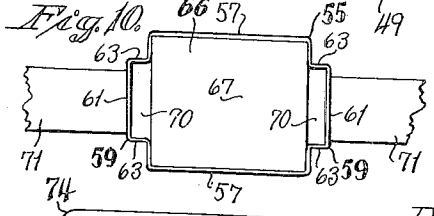
Fig. 10.

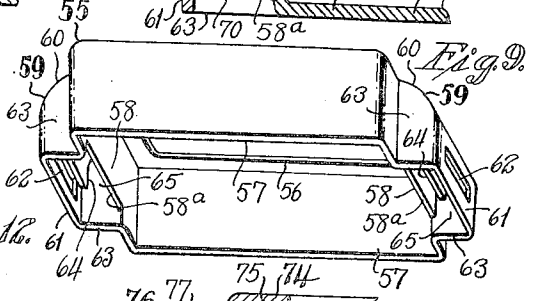
Fig. 9.

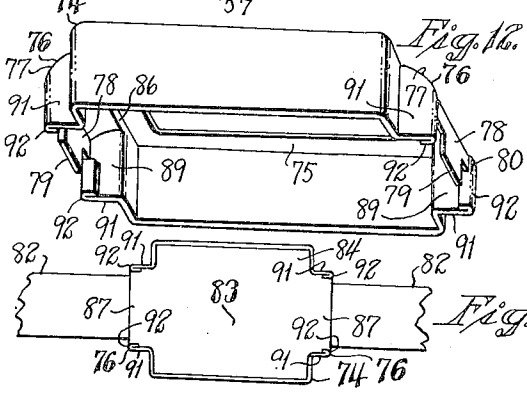
Fig. 12.

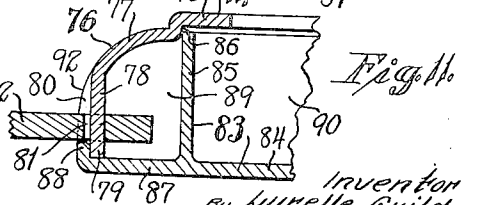
Fig. 11.


Fig. 13.

Inventor
by Lurelle Guild
Seymour Earle Nichols
Attorneys

Patented July 9, 1940 2,207,512

# UNITED STATES PATENT OFFICE

2,207,512

## WRIST-WATCH CASE

Lurelle Guild, Noroton, Conn., assignor to The Waterbury Clock Company, Waterbury, Conn., a corporation of Connecticut

Application July 30, 1938, Serial No. 222,122

11 Claims. (Cl. 58—88)

This invention relates more especially to an improved construction for wrist-watch cases having interfitting case-forming parts which provide an intermediate watch-movement-receiving compartment and terminal-compartments oppositely arranged in respect thereto to receive the ends of a wrist-strap.

One object of the present invention is to provide an improved construction for a wrist-watch case wherein one of two case-forming parts which form the wrist-watch case has embodied therein oppositely-presented terminal-hoods and is provided with strap-end-anchoring members fixedly associated or integrally formed therewith to render it unnecessary to employ removably-connected parts or members for anchoring the ends of a wrist-strap.

Another object of the invention is to provide an improved construction for wrist-watch cases comprising interfitting case-forming parts to facilitate the manufacture of wrist-watch cases on a large scale at a relatively-low cost.

With the above and other objects in view, as will appear to those skilled in the art from the present disclosure, this invention includes all features in the said disclosure which are novel over the prior art and which are not claimed in any separate application.

For the purposes of illustration, the drawing shows several forms in which wrist-watch cases may be constructed to embody the present invention.

In the accompanying drawing, in which certain modes of carrying out the present invention are shown for illustrative purposes:

Fig. 1 is a face view of a wrist-watch case constructed in accordance with the present invention and with a suitable watch-movement encased therein;

Fig. 2 is a rear plan view of the same;

Fig. 3 is an enlarged longitudinal section of the wrist-watch case from which the watch-movement has been omitted and taken on the line 3—3 of Fig. 1;

Fig. 4 is a perspective view, taken from below and on a reduced scale, of the outer casing-member shown in Figs. 1, 2 and 3;

Fig. 5 is a perspective view of the strap-end shown in Figs. 1, 2 and 3;

Fig. 6 is a medial longitudinal vertical section of one end of another embodiment of the present invention;

Fig. 7 is a perspective view from below of the outer casing-member of the structure of Fig. 6;

Fig. 8 is a medial longitudinal vertical section of one end of another embodiment of the present invention;

Fig. 9 is a perspective view taken from below of the outer casing-member of the structure of Fig. 8;

Fig. 10 is a rear plan view of the wrist-watch-case structure shown in Figs. 8 and 9;

Fig. 11 is a medial longitudinal vertical section of one end of another embodiment of the present invention;

Fig. 12 is a perspective view of the outer casing-member of the case-structure of Fig. 11; and

Fig. 13 is a rear plan view of the wrist-watch case partly shown in Fig. 11.

In my co-pending application, Serial No. 222,121 filed on even date herewith, I have shown, described and claimed a wrist-watch case comprising inner and outer case-forming parts, one of which is provided with strap-end-anchoring members fixedly associated or integrally formed with the terminal-portions thereof in such a way that when the said case-forming parts are assembled, the said strap-end-anchoring members are caused to engage and anchor the ends of a wrist-strap previously positioned in the strap-end-receiving portions of the other case-forming part.

According to the present invention, the ends of a wrist-strap are positioned in the terminal-portions of one of the case-forming parts, and, at the same time, anchored therein by strap-end-anchoring members fixedly associated or integrally formed with the terminal-portions of the same case-forming part. In same instances, the simultaneous positioning and anchoring of the strap-ends in the terminal-portions of one and the same case-forming part, is accomplished before the case-forming parts are assembled; in other instances, either before or after the case-forming parts have been assembled; and in all instances, the actual positioning and anchoring of the strap-ends is accomplished independently of the assembling of the said case-forming parts.

In the form of the invention shown in Figs. 1 to 5 inclusive, the wrist-watch case comprises an outer casing-part designated generally by the reference character 20, and an inner casing-part designated generally by the reference character 21.

The inner casing-part 21 comprises a bottom-wall 22; laterally-spaced side-walls 23—23; and end-walls 24—24. The said inner casing-part 21 is partly closed at the top by an intermediate top-wall portion 25 of the said outer casing-part 20 to form an intermediate watch-receiving com-

partment 26 in which is installed a watch-movement 26a indicated in Fig. 1.

The outer casing-part 20 includes, in addition to the top-wall portion 25 thereof, side-walls 27—27; and laterally-spaced end-wall panels 28—28 which are constructed and arranged to slidably engage with the end-walls 24—24 of the inner casing-part 21 when the said outer and inner casing-parts are assembled. The outer casing-part 20 is provided at its opposite ends respectively with terminal-hoods 29—29, each of which comprises a curved top-wall portion 30 respectively extending outwardly and downwardly from the opposite ends of the top-wall portion 25 of the outer casing-part 20; an end-wall 31; and a pair of laterally-spaced side-wall panels 32—32. The lower edges of the end-walls 31—31 and side-wall panels 32—32 are preferably, and as shown, disposed in a common plane with the bottom-wall 22 of the inner casing-part 21.

The end-walls 24—24 of the inner casing-part 21 form partitions between terminal-compartments 33—33 in the terminal-hoods 29—29, and the intermediate watch-receiving compartment 26.

A portion of each of the end-walls 31—31 of the terminal-hoods 29—29 is displaced or bent inwardly to provide a strap-receiving opening 34 and a downwardly-and-inwardly-sloping anchoring-tongue 35. Each anchoring-tongue 35 enters into a transverse anchoring-slot 37 formed in the adjacent one of two strap-ends 36—36 which enter through the respective receiving-openings 34—34 above referred to.

Figs. 6 and 7 show a modified form of the construction shown in Figs. 1 to 5 inclusive. According to this embodiment of the invention, an outer casing-part designated generally by the reference character 38 is constructed to receive an inner casing-part designated generally by the reference character 39. The said inner casing-part 39 is preferably substantially the same in form and construction as the inner casing-part 21 previously described. As shown in a fragmentary way in Fig. 6, the inner casing-part 39 is provided with a bottom-wall 40 and an end-wall 41, the top-opening of the said inner casing-part 39 being partly closed by a rim-like top-wall portion 42 of the outer casing-part 38 to form an intermediate watch-receiving compartment 43.

As shown particularly well in Fig. 7, the outer casing-part 38 comprises laterally-spaced side-walls 44—44; two pairs of end-wall panels 45—45; and oppositely-arranged terminal-hoods designated generally by the reference characters 46—46.

Each of the terminal-hoods 46—46 projects outwardly from the laterally-spaced inner edges of a pair of the end-wall panels 45—45 and comprises a curved top-wall portion 47 which merges above with the top-wall portion 42 of the outer casing-part 38; an end-wall 48; and side-wall panels 49—49. Each terminal-hood thus provides a terminal-compartment 50 which is separated from the watch-receiving compartment 43 by one of the end-walls 41 of the inner casing-part 39.

In the end-wall 48 of each terminal-hood 46 is a clearance-slot or -opening 51 through which passes a strap-end 52 having a transverse anchoring-slot 53. Extending upwardly and inwardly from below each clearance-slot 51 and preferably integrally formed with the lower edge-portion of the adjacent end-wall 48, is an anchoring-tongue 54 which is designed to be passed through the slot 53 in the complemental strap-end 52.

In the embodied form of the invention shown in Figs. 8, 9 and 10, an outer casing-part designated generally by the reference character 55 is provided with a top-wall portion 56; side-walls 57—57; transverse inner end-walls 58—58 respectively provided with notches 58a—58a in their lower edges to accommodate the strap-end anchoring-members to be hereinafter referred to; and terminal-hoods designated generally by the reference characters 59—59.

Each of the terminal-hoods 59—59, just above referred to, comprises a curved top-wall 60; an outer end-wall 61 provided with a transverse strap-receiving slot 62; and laterally-spaced side-wall panels 63—63.

A strap-end anchoring-tongue 64 which is arranged in a terminal-compartment 65 within each of the terminal-hoods 59—59, depends from and is preferably integrally constructed with the curved top-wall portion 60 of a given terminal-hood 59. The said anchoring-tongue 64 is intermediately arranged with respect to the inner and outer end-walls 58 and 61, and terminates slightly below the lower edge of the strap-receiving slot 62 in the adjacent end-wall 61.

An inner casing part designated generally by the reference character 66, fits within the outer casing-part 55 and is provided with a bottom-wall 67; side-walls 68—68; and end-wall 69 at each end thereof; and extensions 70—70 which respectively project outwardly from the end-walls 69—69 of the said inner casing-part 66. Each extension 70 is vertically offset above the bottom-wall 67 of the said inner casing-part and extends through a notch 58a in the bottom-edge of the adjacent inner end-wall 58. Each extension 70 preferably conforms to the inner horizontal dimensions of the lower end of its complemental terminal-compartment 65 to close the bottom of the same, and is suitably located vertically in respect to the end-wall 69 of the inner casing-part 66, so as to preferably come into engagement with the bottom-end of the anchoring-tongue 64 for limiting the insertion of the inner casing-part 66 into the outer casing-part 55.

According to the embodiment of the invention, just above described, before the outer and inner casing-parts 55 and 66 are assembled, one of two strap-ends 71—71 is inserted through each strap-receiving slot 62 and warped downwardly past the lower end of the adjacent anchoring-tongue 64 until an anchoring-slot 72 in the said strap-end can be moved upwardly over the anchoring-tongue 64. After this has been done, the inner casing-part 66 is telescoped within the outer casing-part 55 until each extension 70 comes into engagement with the lower end of the adjacent anchoring-tongue 64 and thereby securely locks each strap-end 71 in anchored position on its complemental anchoring-tongue 64.

With the casing-parts assembled as just above described, the structural design of the wrist-watch case, as seen from the rear in Fig. 10, comprises a flat rectangular surface representing the bottom-surface of the inner casing-part 66 within a skeletonized cruciform frame representing the bottom marginal edge of the outer casing-part 55 and with the bottom-surfaces of the terminal-plates 70 forming depressions below the common plane of the bottom-wall 67 of the inner casing-part 66 and lower marginal edge of the outer casing-part 55.

According to the embodied form of the invention shown in Figs. 11, 12 and 13, an outer casing-part designated generally by the reference character 74, is provided at each end with a terminal-hood designated generally by the reference character 76. Each terminal-hood 76 is provided with an arcuate wall-portion 77 extending outwardly and downwardly from the top-wall 75 of the outer casing-part 74.

According to the embodiment of the invention shown in Figs. 11 to 13 inclusive, a major portion 78 of the outer end-wall of the terminal-hood 76 is displaced inwardly to provide an anchoring-tongue 79. For this purpose, the inwardly-displaced portion 78 of the outer end-wall is cut away along opposite edges at the bottom to provide the anchoring-tongue 79 which is of reduced width and is offset inwardly from the opening 80 left by the inward displacement of the end-wall portion 78. Each anchoring-tongue 79 is thereby adapted to extend into anchoring engagement with a transverse anchoring-slot 81, one of which latter is formed in each of two opposite strap-ends 82—82.

An inner casing-part designated generally by the reference character 83 fits mainly within the outer casing-part 74 and is provided with a bottom-wall 84; an end-wall 85 (one at each end) which abuts at its upper end against a shoulder 86 formed in the outer casing-part 74 intermediately of the top-wall 75 thereof and the arcuate wall 77 of the adjacent terminal-hood 76; and a bottom-plate extension 87 (one at each end) which is provided at its outer end with an upwardly-extending terminal-flange 88 which is disposed within the lower portion of the terminal-opening 80 and is of sufficient width to substantially close the bottom-end of said terminal-opening. The said terminal-flange 88, in the assembled position of the said inner and outer casing-parts, is preferably in lateral abutment with the lower end of the anchoring-tongue 79 and thus serves to retain the strap-end 82 in secure locking engagement with the said anchoring-tongue 79. The strap-end 82, thus anchored, is arranged within a terminal-compartment 89 which is separated by the end-wall 85 of the inner casing-part 83 from an intermediate watch-receiving compartment 90 formed between the outer and inner casing-parts in their assembled position.

Preferably, and as shown, the outer edges of the side-wall panels 91—91 of each terminal-hood 76 is reversely bent to provide strengthening-ribs 92—92, as is particularly well shown in Figs. 12 and 13.

The invention may be carried out in other specific ways than those herein set forth without departing from the spirit and essential characteristics of the invention, and the present embodiments are, therefore, to be considered in all respects as illustrative and not restrictive, and all changes coming within the meaning and equivalency range of the appended claims are intended to be embraced therein.

I claim:

1. A wrist-watch case comprising: an outer case-forming part open at the bottom and having oppositely-arranged terminal-hoods provided with strap-receiving openings in the end-walls thereof and having integrally-formed strap-end anchoring-tongues inclined downwardly toward the open bottom of the outer case forming part and an inner case-forming part movable through the said bottom opening in and forming with the said outer case-forming part an intermediate watch-receiving compartment.

2. A wrist-watch case having a portion thereof constructed and arranged to form a terminal-hood, said terminal-hood being provided in the end-wall thereof with an opening to receive the ends of a wrist-strap and an integrally-formed strap-end anchoring-tongue depending from the inner wall of the said terminal-hood above said strap-receiving opening and extending downwardly to a plane below the lower edge of said opening.

3. A wrist-watch case comprising: interfitting inner and outer case-forming parts providing an intermediate watch-receiving compartment, the said outer case-forming part including oppositely-arranged terminal-hoods provided with openings to receive the ends of a wrist-strap; and a strap-end anchoring-tongue integrally formed with and depending from the top wall of each of the said terminal-hoods past the said strap-receiving openings in a plane spaced inwardly therefrom.

4. A wrist-watch case comprising: interfitting inner and outer case-forming parts providing an intermediate watch-receiving compartment, one of said case-forming parts having oppositely-presented end-walls provided with inwardly-displaced portions to form strap-end anchoring-members.

5. A wrist-watch case comprising: interfitting case-forming parts providing an intermediate watch-receiving compartment and oppositely-arranged terminal compartments provided with strap-openings in the end-walls thereof; and a strap-end anchoring-tongue integrally formed with the end-wall of each of the said terminal-compartments and inclined inwardly and downwardly within the said terminal-compartments from above the strap-openings formed therein.

6. A wrist-watch case comprising: interfitting case-forming parts providing an intermediate watch-receiving compartment and oppositely-arranged terminal-compartments provided with strap-openings in the end-walls thereof; and a strap-end anchoring-tongue formed by a displaced portion of the end-wall of each of the said terminal-compartments, the said end-walls of the said terminal-compartments being provided with strap-openings formed by the vacant spaces left by the displaced portions of the said end-walls.

7. A wrist-watch case comprising: an outer case-forming part having oppositely-presented end-walls with inwardly-displaced portions to form strap-receiving openings extending through the bottom edges of said end-walls, said displaced portions of the end-walls being reduced in width at their lower ends to provide strap-end anchoring-tongues offset inwardly from the said strap-receiving openings; and an inner case-forming part interfitting with the said outer case-forming part to provide an intermediate watch-receiving compartment and having extensions at the bottom extending past the lower end of the said strap-end anchoring-tongues.

8. A wrist-watch case comprising: an outer case-forming part provided with a terminal-hood, said terminal-hood comprising an outer end-wall provided with a strap-receiving slot; an inner transverse wall arranged substantially parallel to the outer end-wall; an intermediate transverse wall constructed and arranged to provide a strap-end anchoring-member; side-walls; and a top-wall integrally uniting all of the aforesaid walls of the terminal-hood; and an inner case-forming

part interfitting with the said outer case-forming part to form therewith an intermediate watch-receiving compartment, the said inner case-forming part being provided with transverse walls slidably interengaging with the transverse inner walls of the said terminal-hood and with an extension extending outwardly from one of the transverse walls of the inner case-forming part past the inner and intermediate transverse walls of the terminal-hood to close the terminal-compartment within the said terminal-hood at the bottom.

9. A wrist-watch case having a watch-receiving compartment and a terminal-compartment extending outwardly therefrom in a direction to receive the end of a wrist-strap to be anchored therein, the said wrist-watch case comprising: an outer case-forming part having perimetral walls substantially coextensive with certain of the perimetral walls of the said watch-receiving and terminal-compartments and a bottom opening substantially coinciding with certain of the bottom marginal-edges of the said compartments; means for anchoring the ends of a wrist-strap within the said terminal compartments; and an inner case-forming part constructed to be moved into and out of the said outer case-forming part through the said bottom opening and having a bottom wall constructed and arranged to form the bottom wall of the said watch-receiving compartment.

10. A wrist-watch case having an intermediate watch-receiving compartment and oppositely-arranged terminal-compartments to receive the strap-ends of a wrist-watch, the said wrist-watch case comprising: an outer case-forming part having a bottom opening substantially-coextensive in size and contour with said compartments taken altogether; and having the terminal-compartment-forming wall-portions thereof constructed and arranged to provide oppositely-presented strap-end-receiving openings; strap-end-anchoring tongues integrally formed with the said terminal-compartment-forming wall-portions and having free ends presented downwardly toward the said bottom opening; a wrist-strap having its ends constructed to be introduced into the said terminal-compartments through the said strap-end-receiving openings and laterally into anchoring engagement with the said free ends of said strap-end-anchoring tongues; and an inner case-forming part movable into the said outer case-forming part through the bottom opening therein and constructed to form the bottom wall of the said intermediate watch-receiving compartment and having transverse wall-portions slidably interfitted with the outer case-forming part to form the end-walls of the said watch-receiving compartment.

11. A wrist-watch case having an intermediate watch-receiving compartment and oppositely-arranged terminal-compartments to receive the strap-ends of a wrist-watch, the said wrist-watch case comprising: an outer case-forming part having lateral wall-portions and substantially conforming in size and contour to the top and outer side-walls of all of the said compartments above the bottom perimetral edges of the wrist-watch case; and an inner case-forming part having a bottom-wall portion constituting the bottom wall of the said intermediate watch-receiving compartment and lateral wall-portions constructed and arranged to slidably-interfit with the lateral wall-portions of the said outer case-forming part to form the end-walls of the said intermediate watch-receiving compartment.

LURELLE GUILD.