Dec. 29, 1964 N. S. NAHMAN ETAL 3,163,832

SUPERCONDUCTIVE COAXIAL LINE USEFUL FOR DELAYING SIGNALS

Filed Sept. 15, 1961 2 Sheets-Sheet 1

FIG. 1

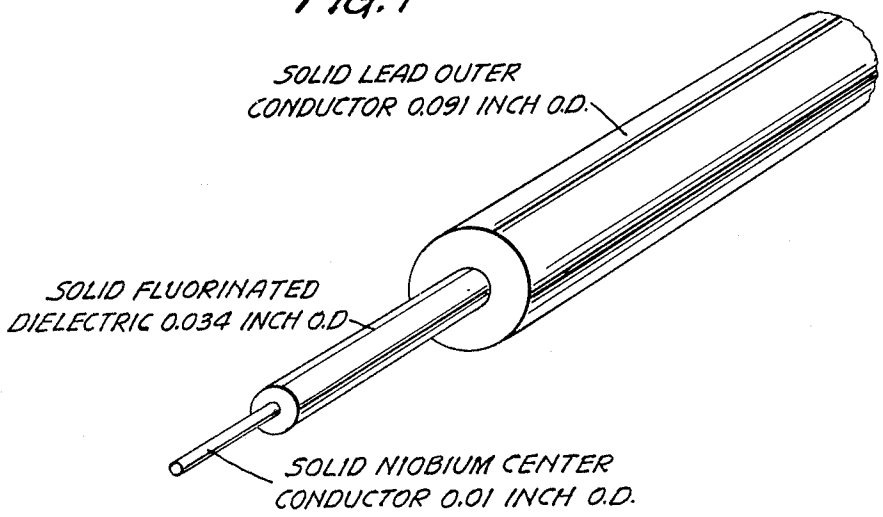

FIG. 2

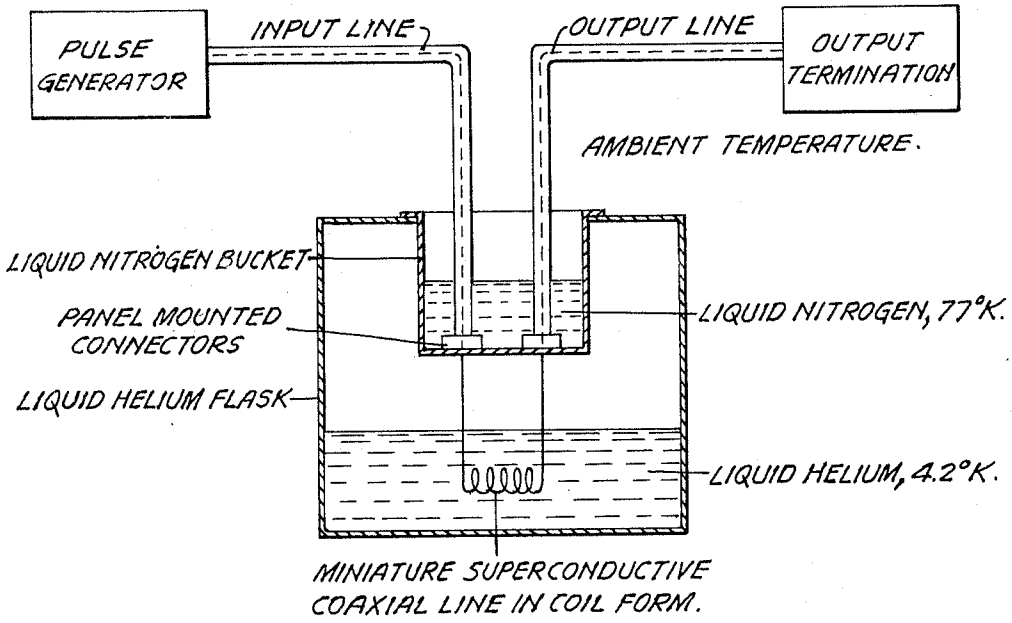

INVENTORS
NORRIS S. NAHMAN
GUY M. GOOCH
BY Cruzan Alexander
ATTORNEY

Dec. 29, 1964 N. S. NAHMAN ETAL 3,163,832

SUPERCONDUCTIVE COAXIAL LINE USEFUL FOR DELAYING SIGNALS

Filed Sept. 15, 1961 2 Sheets-Sheet 2

FIG. 3

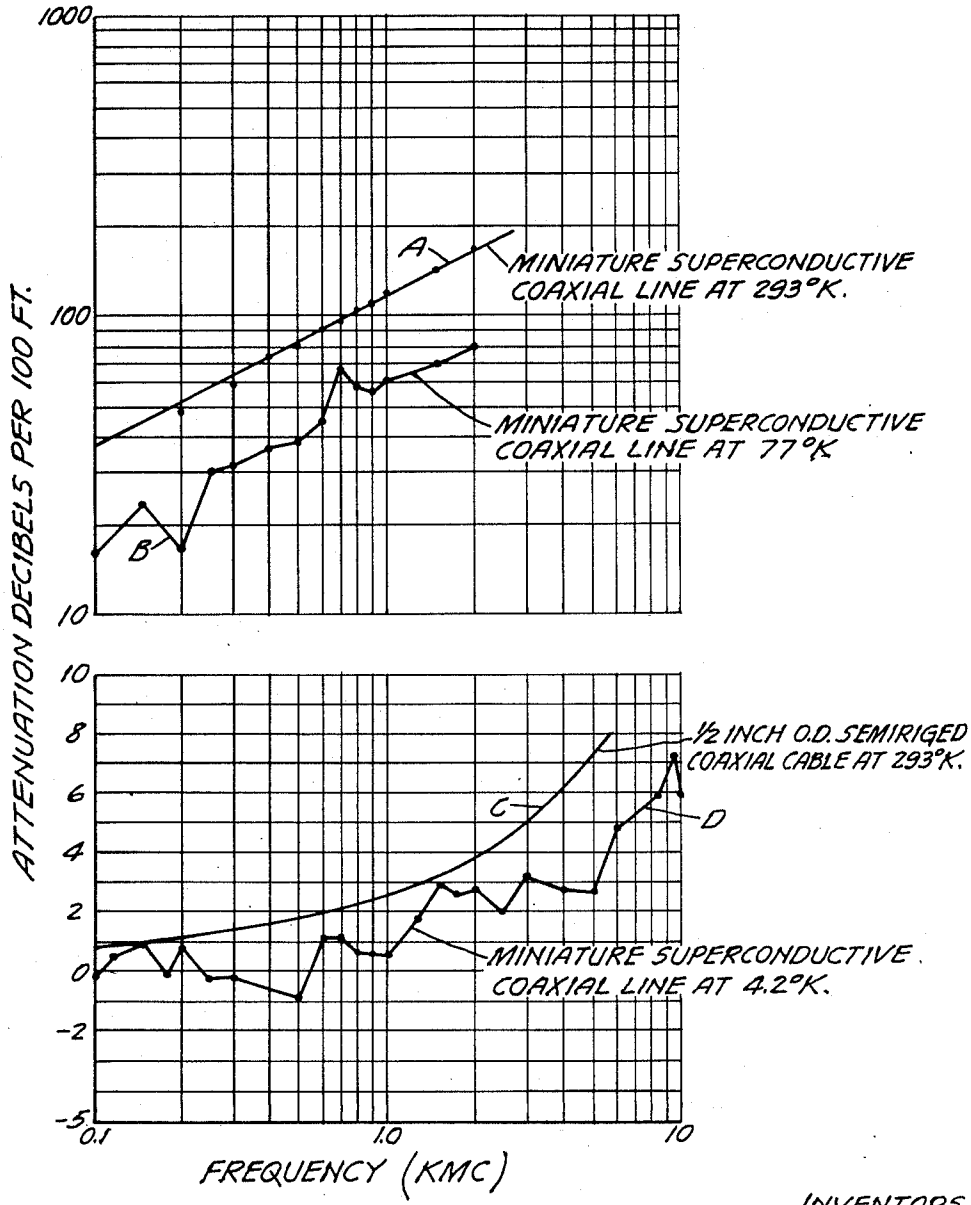

INVENTORS
NORRIS S. NAHMAN
GUY M. GOOCH
BY Cruzan Alexander
ATTORNEY

United States Patent Office 3,163,832 Patented Dec. 29, 1964

3,163,832

SUPERCONDUCTIVE COAXIAL LINE USEFUL FOR DELAYING SIGNALS

Norris S. Nahman and Guy M. Gooch, Lawrence, Kans., assignors to The Kansas University Endowment Association, Lawrence, Kans., a non-profit corporation of Kansas

Filed Sept. 15, 1961, Ser. No. 138,465
5 Claims. (Cl. 333—31)

This invention relates to an electrical coaxial line. In one aspect this invention relates to a relatively lossless signal delay line for nanosecond systems, such as pulse oscillography. In another aspect, this invention relates to a method and apparatus to minimize change in rise time in transmitting nanosecond pulses.

The transmission of a nanosecond (10^{-9} second) duration pulse over a relatively long transmission path is conveniently accomplished by a coaxial transmission line; the band-width of the line is primarily limited by its inherent skin effect attenuation. Physically realizable coaxial lines are not uniform lines because connectors, dielectric supports, and random geometrical imperfections introduce non-uniformities which in turn produce reflective losses and may also produce higher order mode transmission of microwave frequencies. Skin effect losses for a given characteristic impedance may be reduced to any desired non-zero magnitude by increasing the respective dimensions of the coaxial line; however, mode conversion effects, if they are present, will occur at much lower frequencies. Nanosecond systems by their very nature are inherently small physically and are not too compatible with large diameter coaxial lines. In nanosecond pulse oscillography, it is usual practice to employ relatively large semi-rigid 50-ohm coaxial lines (½-inch to ⅞-inch outer diameter) to provide signal delays of the order of 100 nanoseconds in the vertical signal channel. Such lines possess an attenuation which is less than 10 db/100 feet at 4000 mc.

The object of this invention is to provide a coaxial line composed of new materials of construction.

Another object is to provide a method for lossless signal delay in an electrical transmission system.

Still another object is to provide an improved circuit in a nanosecond pulse oscillograph.

Various other objects and advantages will become apparent to those skilled in the art from the accompanying description and disclosure.

This invention relates to a miniature coaxial line that possesses a low attenuation by virtue of the increase of normal conductivity at temperatures below room temperature (293° K.) and also by virtue of the superconductivity phenomenon which occurs at very low temperatures. The miniature line of this invention can be used as a relatively lossless signal delay line for nanosecond pulse oscillography, or for limited time, information storage as employed in electronic computers.

FIGURE 1 of the drawings shows a diagrammatic illustration of the uniform geometry coaxial line of the present invention utilizing superconductors insulating from each other by a solid dielectric.

FIGURE 2 of the drawings diagrammatically illustrates the cryostatic environment in which the coaxial line of FIGURE 1 was used in the example hereinafter in which the coaxial line in coil form was emersed in liquid helium and connected to the input and output by panel-mounted connectors emersed in liquid nitrogen.

FIGURE 3 of the drawings shows the attenuation measurements for the miniature coaxial line of the present invention for temperatures of 293° K. (curve A) and 77.3° K. (curve B). This figure also shows comparative attenuation measurements for a conventional one-half inch coaxial line (curve C at 293° K.) and the miniature coaxial line of the present invention at a temperature of 4.2° K. (curve D).

According to this invention, the coaxial line comprises an inner conductor and an outer conductor circumferentially surrounding said inner conductor, at least one and preferably both of which are made of superconductive materials, and the inner conductor is suitably insulated from the outer conductor on the outer surface of the inner conductor with a suitable dielectric, such as Teflon or Mylar. In some instances, the outside of the coaxial line may be similarly insulated. Any superconductor may be used for either the inner or outer conductor. However, if the coaxial line is to be coiled, the outer conductor should be soft metal such as lead or indium. On the other hand, the inner conductor should be relatively strong in tensile strength to prevent pulling apart or breaking of the inner conductor by thermal contraction. The superconductors, niobium and vanadium, possess the desired qualities for the inner conductor. Examples of other suitable superconductors for either inner or outer conductor include tantalum, mercury and lanthanum.

The relative sizes of the inner and outer conductors depend upon three electrical considerations.

(*a*) The characteristic impedance of the line Z, is given by the well-known relation:

$$Z=\sqrt{L/C} \tag{1}$$

where

$$L=\frac{\mu}{2\pi}\ln\frac{r_0}{r_i} \tag{2}$$

$$C=2\pi\epsilon/\ln\frac{r_0}{r_i} \tag{3}$$

in which the following definitions apply:

L=inductance per meter, henrys/meter
C=capacity per meter, farads/meter
μ=permeability free space, $4\pi\times10^{-7}$ henrys/meter
ϵ=dielectric constant, farads/meter
r_0=inner radius of the outer conductor
r_i=radius of the inner conductor

Note that the characteristic impedance, Z, depends upon the ratio of the two coaxial radii which allow one to build a cable of any over-all size for a given Z.

(*b*) To prevent the propagation of higher order electrical waves, waves other than the "transverse electromagnetic" (TEM) along the cable, it is desirable to choose the radii so that higher order propagation cannot occur until the frequency of the applied electrical signal is such that the electrical wave-length is equal to, or less than λ_c.

$$\lambda_c=\text{approximately } \pi\sqrt{\epsilon}(r_i+r_0) \tag{4}$$

(*c*) In some situations one might be concerned with the maximum voltage that could be applied between the outer and inner conductors with a given dielectric. If the maximum voltage required a large separation to prevent dielectric breakdown, then the designer would be limited by the maximum allowable voltage gradient of the dielectric. The maximum voltage gradient existing in a coaxial line is given by the well-known relation:

$$\text{Max. gradient}=\frac{0.434E}{r_i\log_{10}(r_0/r_i)} \tag{5}$$

Another factor to be considered is the maximum current which may flow through coaxial conductors without producing the critical magnetic field of either superconductor (this effect is called the "Silsbee effect").

There are no restrictions as to the minimum length of the coaxial line. The maximum length at a given fre-

quency of operation is ultimately limited by the skin effect electrical loss in the metal conductors, the electrical dielectric loss, and the reflective losses due to random geometrical imperfections in the cable geometry. However, since the cable is operated at low temperature (usually below 100° K.) or in the superconductive state, the above-described losses will be very small compared to a cable operated at room temperatures and in the normal conductive state.

The following example is offered as a better understanding of the invention and illustrates the construction of a coaxial line of superconductors and the characteristics of such a line.

Example

In accordance with this example, a miniature line was fabricated in a total length of 200 feet; its construction was as follows and as illustrated in FIGURE 1 of the drawings:

(1) Inner conductor, niobium, 0.010-inch diameter
(2) Dielectric, Teflon (polytetrafluoroethylene)
(3) Outer conductor, lead, 0.034-inch inner diameter, 0.091-inch outer diameter.

The 10-mil niobium wire was formed by sintering the metallic powder into an ingot and drawing to size, the resultant impurity being 0.25% by weight. The Teflon dielectric was extruded upon the niobium inner conductor. The lead wire conductor was fabricated about the Teflon-coated inner conductor by a pressure welding technique. The lead wire was not completely pure and contained about 0.02% by weight impurities. Electrically, the line has a characteristic impedance of 50 ohms and a capacity of 29.1 picofarads per foot. Mode conversion occurs for frequencies on the order of 100 kmc. The line superconducted for temperatures less than approximately 7.22° K., the critical temperature for lead, the critical temperature for niobium is approximately 8.7° K. The measured conductivities of the conductors were 6.14×10^6 mhos/meter at 293° K., and 24.1×10^6 mhos/meter at 77.3° K. for the niobium inner conductor; and 4.82×10^6 mhos/meter at 293° K. and 20.17 mhos/meter at 77.3° K. for the lead outer conductor.

The pulse transmisison measurements of the coaxial line of this example were accomplished on a traveling wave synchroscope that employed a Du Mont-type KR1524 P11M TWCRT. The deflection response of the indicator was 6 db down at 2.1 kmc. The 100 feet of miniature line of the above dimensions, when wound on a 2-inch diameter form, constituted a cylindrical package of 3¼ inches in diameter and 5 inches long. The low-temperature system consisted of two concentric dewars, the helium flask having an internal radius of 2⅞ inches and a depth of 15¼ inches; the nitrogen flask had an internal radius of 4½ inches and a depth of 18½ inches. The low-temperature operation of the system was at 4.2° K. and helium pumping was not required.

The pulse response measurements employed an input pulse having the following characteristics:

(1) 50% pulse width, 1.7 nanoseconds
(2) 10% to 90% rise time, 0.4 nanosecond
(3) amplitude, 16.7 volts

The pulse measurements were run on a 10-foot and a 100-foot length of line in order to demonstrate clearly the behavior of the line. The shorter length was necessary to obtain measurable responses when the line was operating at temperatures equal to or greater than 77.3° K. Pulse measurements indicated a substantial increase in band-width as the temperature moved from 293° K. to 77.3° K. to 4.2° K. The rise time of the pulse was unaltered after passing through 100 feet of line at 4.2° K., and the upper portion of the out-put pulse was reduced initially in amplitude by a reflection. The pulse measurements demonstrated the presence of reflections.

The attenuation measurements were also concerned with two lengths of line, 10 and 100 feet long. For temperatures equal to or greater than 77.3° K., the 10-foot length was employed; the results were multiplied by ten and plotted in db/100 feet. In FIGURE 3, curves A and B are the measured attenuation at 293° K. and 77.3° K., respectively.

In FIGURE 3, curve D is the 4.2° K. measured attenuation for the coaxial cable of this example, while curve C is also included for comparison, which curve was the attenuation curve at room temperature of 100 feet of ½-inch Spiroline rigid coaxial line. The 4.2° K. attenuation curve has been adjusted in that the known rigid line losses and the in-put reflection loss were subtracted from the over-all attenuation. Experimental error was in evidence which accounted for the negative attenuation. The variations in the 4.2° K. attenuation were due to the multiple reflections that were present in the over-all system; however, even with the reflective losses, the line out-performed the large 293° K. Spiroline coaxial line. The reflection losses of the over-all system, including all transmission paths, were clearly placed in evidence when the miniature line was in the superconductive state (4.2° K.).

When the majority of the attenuation disappeared in the transmission line system, all of the non-uniformities of the system became evident and were exhibited in the undamped reflections produced by the system. Some of the discontinuities of the various components in the given system can be measured separately, and their effect on the over-all transmisison may be calculated.

Regarding the discontinuities of the superconductive line and its associated connectors, it was found that the very low operating temperatures caused geometrical changes (contractions) in the line itself and significantly disturbed the relative positions of the line conductors in the connector constant-impedance matching transitions. This, in turn, produced a relatively large frequency-dependent VSWR that was not experimentally repeatable due to the present design of the transitions.

The 4.2° K. attenuation measurements in FIGURE 3 are not to be interpreted as being indicative of the high-frequency attenuation to be found in superconductor coaxial lines. The majority of the resistive attenuation was due to the two short lengths of the miniature line that were not superconducting along their entire lengths. These two lengths were the in-put and out-put portions of the line that was not submerged in liquid helium and was attached to connectors. The connectors were panel-mounted in the base of a liquid nitrogen bucket; hence, the miniature line's extremities were held at 77.3° K. as illustrated in FIGURE 2 of the drawings.

In addition to non-uniform thermal contractions, the line attenuation was dependent upon the electrical characteristics of the particular niobium, lead and Teflon samples employed in the construction of the line. The fabrication techniques of the individual materials and the line itself introduced into the respective materials various stresses and strains which, in turn, altered their electrical characteristics.

This example has demonstrated that a miniature superconducting line can be employed as a relatively loss less wide-band coaxial line that is able to transmit nanosecond pulses with no apparent distortion. Furthermore, the experiments performed in conjunction with the present-day knowledge of low-temperature normal conductivity demonstrated the feasibility of a miniature low-temperature normal conducting line which possessed an attenuation several orders less than 293° K. attenuation.

In this latter respect, attenuation in a conventional coaxial line in which the metals used are not superconductors can be reduced. The metals used, however, for the coaxial line would have to be very pure (less than 1 weight percent impurity) and free of crystal dislocations and stress. The attenuation with such a coaxial line may be reduced as much as 10 to 10^2 at 4.2 K., as compared

to 293° K. (conductivity increased 10^2 to 10^4). The use of superconductors in such a coaxial line in place of conventional metals had a marked advantage, for the same degree of purity, etc., of increasing the conductivity as much as 10^{17}, and accordingly reduced the attenuation still further.

One point that should be kept in mind is that if the losses vanish in a transmission line, the line geometry must be perfectly uniform if reflections within the line itself are to be avoided. Under lossless conditions, such internal reflections would not be damped by resistive loss, and the resulting multiple reflections could affect the signal-to-noise ratio of the transmission line; hence, under some circumstances, in a given line a combination of normal and superconductors would be appropriate, e.g. inner conductor—super, and outer conductor—normal, and vice versa.

Various modifications of construction and dimensions of the coaxial line as well as the use of different superconductors may become obvious to those skilled in the art without departing from the scope of this invention.

Having described our invention, we claim:

1. In a nanosecond pulse oscillograph, the improvement which comprises a coiled unitary signal delay line having an outside diameter less than ½ inch comprising an inner conductor and an outer conductor insulated from each other by an extruded solid fluorinated dielectric, in which the inner conductor is niobium and the outer conductor is lead, in which the dielectric and both conductors are of substantially uniform geometry and each of said conductors is a single solid phase, and means for maintaining said signal delay line at a temperature below 7.22° K.

2. A coiled unitary coaxial line having an outside diameter less than ½ inch capable of transmitting nanosecond electrical pulses comprising an inner superconductive metal conductor and an outer superconductive metal conductor insulated from each other with an extruded solid fluorinated dielectric, in which said superconductive metals are different materials and the outer superconductor is relatively soft and said inner superconductor is relatively strong in tensile strength, in which the dielectric and both conductors are of substantialy uniform geometry and each of said conductors is a single solid metal phase.

3. A flexible unitary coaxial line having an outside diameter less than ½ inch capable of transmitting nanosecond electrical pulses comprising an inner superconductive metal conductor and an outer metal conductor insulated from each other with an extruded solid fluorinated dielectric, in which the inner conductor is niobium and the outer conductor is lead, in which the dielectric and both conductors are of substantially uniform geometry and each of said conductors is a single solid metal phase.

4. In a nanosecond electrical transmission system, the improvement which comprises in combination a flexible unitary coaxial line having an outside diameter less than ½ inch comprising an inner superconductive metal conductor and an outer metal conductor insulated from each other with an extruded solid fluorinated dielectric, in which the inner conductor is niobium and the outer conductor is lead, in which the dielectric and both conductors are of substantially uniform geometry and each of said conductors is a single solid metal phase, and means for maintaining said coaxial line at a temperature below 100° K.

5. A flexible unitary coaxial line having an outside diameter less than ½ inch capable of transmitting nanosecond electrical pulses comprising an inner superconductive metal conductor and an outer superconductive metal conductor insulated from each other with an extruded solid plastic dielectric, in which said superconductive metals are different materials and the outer superconductor is relatively soft and said inner superconductor is relatively strong in tensile strength and in which the dielectric and both conductors are of substantially uniform geometry.

References Cited by the Examiner

UNITED STATES PATENTS

2,916,615 12/59 Lundburg.

OTHER REFERENCES

Ragan: "Microwave Transmission Circuits," volume 9 of The Radiation Laboratory Series TK 6553R34, pages 158, 159 cited.

Reference Data for Radio Engineers, by International Telephone and Telegraph Corporation, fourth edition, 1956, pages 607 to 611, TK6552 F4.

HERMAN KARL SAALBACH, *Primary Examiner.*