W. HANKIN.
HAND-SAWS.

No. 193,704. Patented July 31, 1877.

Fig. 1.

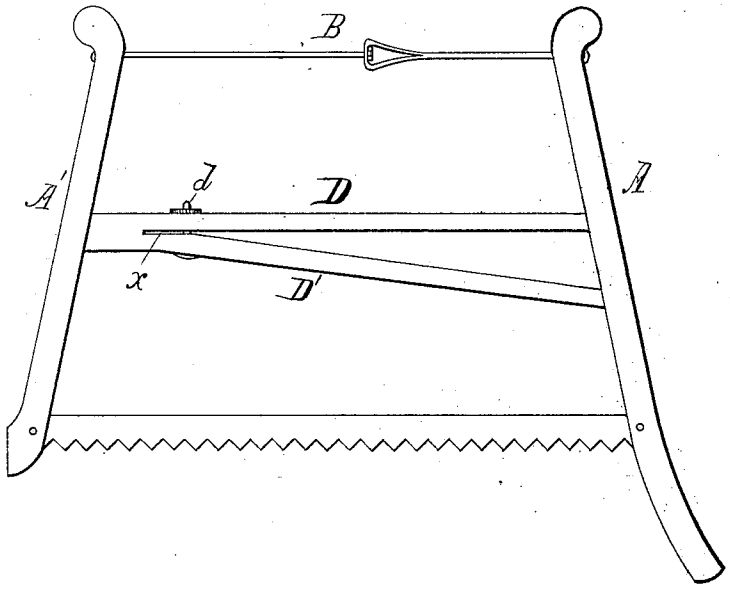

Fig. 2.

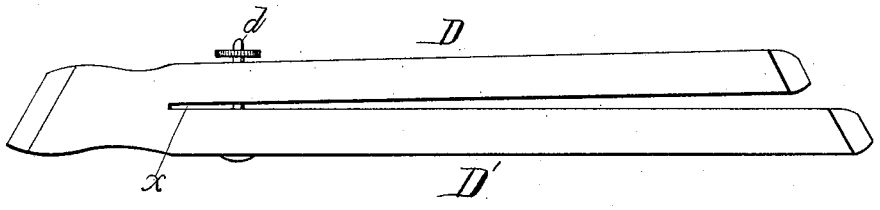

Wm Hankin,
INVENTOR

WITNESSES
Arthur W. Adams.
Christopher Grammer.

J. Wm Mister.
ATTORNEYS

N. PETERS, PHOTO-LITHOGRAPHER, WASHINGTON, D. C.

UNITED STATES PATENT OFFICE.

WILLIAM HANKIN, OF SEELYVILLE, PENNSYLVANIA.

IMPROVEMENT IN HANDSAWS.

Specification forming part of Letters Patent No. **193,704**, dated July 31, 1877; application filed July 18, 1877.

To all whom it may concern:

Be it known that I, WILLIAM HANKIN, of Seelyville, in the county of Wayne and State of Pennsylvania, have invented a certain new and useful Improvement in Saw-Frames; and I do hereby declare the following to be a full, clear, and exact description thereof, reference being had to the accompanying drawing, and to the letters of reference marked thereon, and in which—

Figure 1 is a perspective view of my improved saw-frame, and Fig. 2 is a similar detached view of the middle bar and brace in one piece.

Corresponding parts in the two figures are denoted by like letters.

This invention relates to a certain improvement in saw-frames by which the parts are expeditiously and strongly put together, simplicity of construction obtained, and cheapness promoted; and it consists in slitting the middle bar and diagonal brace from one and the same piece, suitably strengthened or braced at their inner angle when expanded or sprung apart, by which pressure is imparted to the brace to cause it to hold the other parts of the frame in position, substantially as hereinafter more fully set forth.

In the annexed drawing, A, A′, and B refer, respectively, to the front and back bars of the saw-frame and the connection between their upper ends by which the parts are properly adjusted in position. D and D′ refer, respectively, to the middle bar and brace, which are made from one and in the same piece by slitting the latter about midway its width, and longitudinally, to a point, *x*, the unslitted portion thereof serving to unite the bar and brace together, simplifying their construction and lessening expense. The ends of the bar D and that of the brace D′ are formed with tenons, which enter mortises in the bars A A′.

This construction permits of the brace, after the proper insertion in place of the bar, being sprung into its mortise or place against the front bar A by expanding or spreading the parts, as seen in Fig. 1, the leverage or pressure consequent upon which, of course, will rigidly hold the parts together.

At the inner angle of the expanded parts is secured a rivet, bolt, or other means, *d*, for bracing or strengthening them.

Having thus described my invention, what I claim, and desire to secure by Letters Patent, is—

In a saw-frame, the bar D and brace D′, slit or constructed from one and in the same piece, by which they are sprung apart, and pressure or power thus obtained to tighten and secure the parts of the frame in position, in combination with the bolt or its equivalent, *d*, strengthening or bracing them together where they converge, substantially as and for the purpose set forth.

In testimony whereof I have hereunto signed my name this 16th day of July, 1877, in presence of two subscribing witnesses.

WM. HANKIN.

Witnesses:

B. SMITH,

W. HANKIN, Jr.