Jan. 19, 1965 J. KURILLA 3,166,074

ALDEHYDE, CHROME AND POLYHYDRIC ALCOHOL TANNED COLLAGEN ARTICLES AND THEIR PRODUCTION

Filed May 29, 1963 2 Sheets-Sheet 1

Fig. 1.

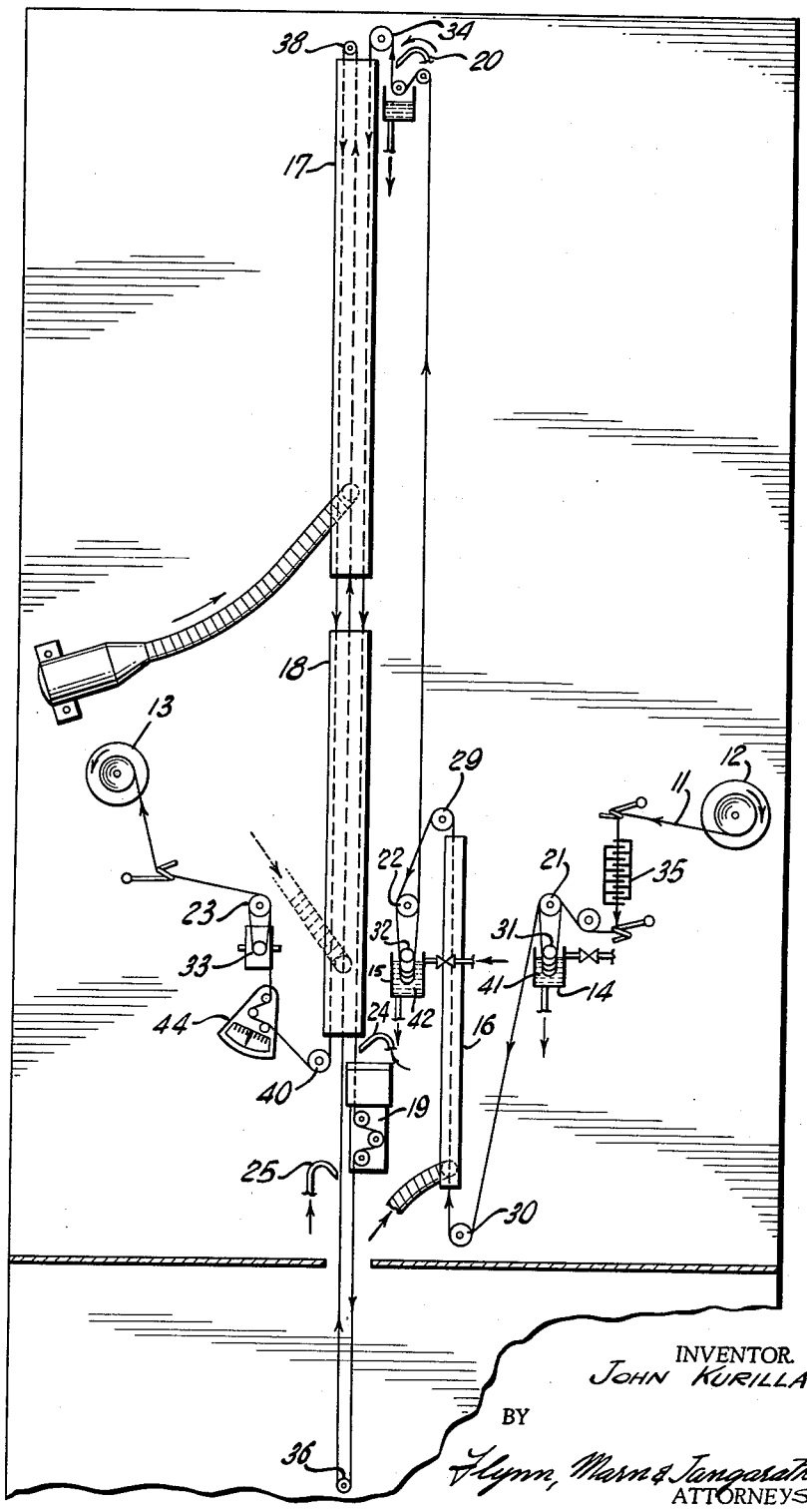

INVENTOR.
JOHN KURILLA

BY

Flynn, Mann & Jangarathis
ATTORNEYS:

Jan. 19, 1965 J. KURILLA 3,166,074

ALDEHYDE, CHROME AND POLYHYDRIC ALCOHOL TANNED COLLAGEN ARTICLES AND THEIR PRODUCTION

Filed May 29, 1963 2 Sheets-Sheet 2

FIG. 1.

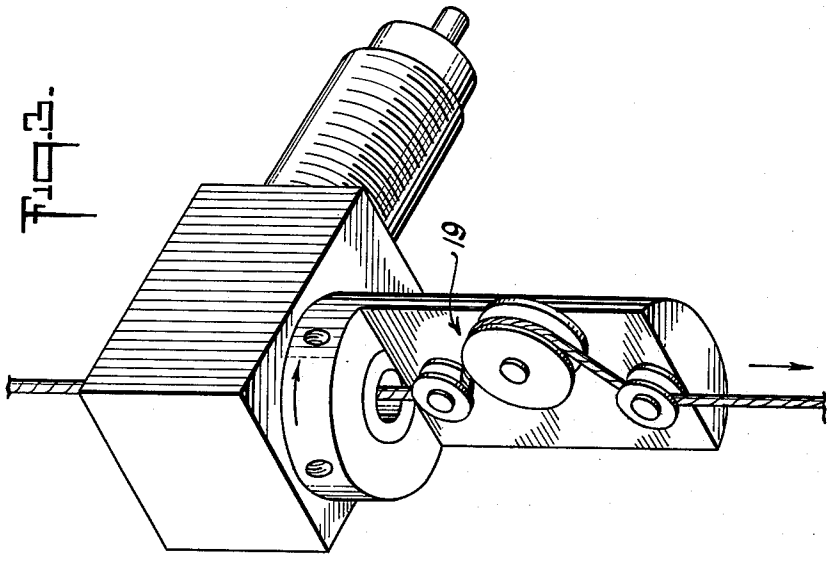

FIG. 2.

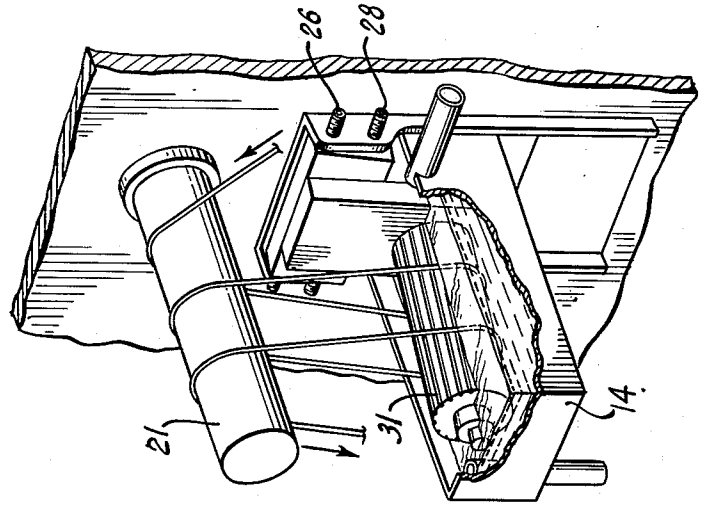

INVENTOR.
JOHN KURILLA

BY

Flynn, Mann & Jangarathis
ATTORNEYS

United States Patent Office 3,166,074 Patented Jan. 19, 1965

3,166,074

ALDEHYDE, CHROME AND POLYHYDRIC ALCOHOL TANNED COLLAGEN ARTICLES AND THEIR PRODUCTION

John Kurilla, Plainfield, N.J., assignor to Ethicon, Inc., Somerville, N.J.

Filed May 29, 1963, Ser. No. 284,244
14 Claims. (Cl. 128—335.5)

The present invention relates to the treatment of protein material and the product so obtained with particular emphasis on the method of chemically treating substantially pure collagen filaments and strands for surgical uses such as suturing and ligating.

This application is a continuation-in-part of application Serial No. 85,302, filed January 27, 1961.

For the sake of clarity, the terms used herein are defined as follows:

The term "tendon collagen fibril" as used herein means a thread-like collagen structure derived from beef tendon that is round in cross section. These fibrils in the completely dehydrated state measure about 500 to 2000 Angstroms in diameter.

The term "swollen tendon collagen fibril" as used herein means a collagen fibril derived from beef tendon that has been swollen in acid solution. The diameters of swollen collagen fibrils range from less than 5000 Angstroms to about 90,000 Angstroms.

The term "monofilament" as used herein means a single thread of oriented collagen fibrils as extruded through a single orifice in a spinnerette.

The term "multifilament" as used herein means a group of individual separate filaments extruded through a spinnerette.

The term "strand" as used herein means a group of filaments that have been united to form a unitary structure.

The protein collagen has exceptional tensile strength and is essentially non-antigenic, which properties have resulted in the wide use of substantially pure collagen strands in surgery. It is well known that collagen sutures which have been implanted in the human body are slowly attacked by proteolytic enzymes with a resulting decrease in tensile strength and ultimate absorption. It is also known that the rate of absorption can be controlled by treating the collagen strand with chemical reagents such as chromium salts. Thus, chromium treated sutures have been prepared from sheep intestines which retain one-half of their original tensile strength from 7 to 10 days after implantation.

A particular problem exists, however, in the case of extruded collagen strands. It has been noted that collagen strands obtained by extruding a dispersion of collagen fibrils into a coagulating bath are characterized by a rapid in vivo digestion. Thus, a collagen suture prepared under conditions that involve swelling collagen fibrils in acid solution, extruding the swollen collagen fibrils to form a filament and subsequently dehydrating the swollen collagen fibrils is more rapidly attacked by proteolytic enzymes than sutures prepared from sheep intestines.

It is an object of the present invention, therefore, to chemically modify collagen and thereby increase its resistance to enzymatic degradation.

It is another object of the invention to provide a chemically treated extruded colagen suture having a suitable wet tensile strength.

Still another object of the invention is to produce an extruded chemically treated absorbable collagen suture that will retain sufficient tensile strength under the conditions of use to accomplish its purpose and be absorbed

in the body after the wound has healed when the suture is no longer necessary.

The present invention provides a method of chemically treating a continuously extruded collagen strand to provide the desired strength, in vivo digestion time and uniformity of product. The process is characterized by treating a bonded collagen multifilament consecutively with at least two different solutions. The first solution is a solution of a polyhydric phenol such as pyrogallol and/or an oxidized polyhydric phenol such as 1,4-naphthaquinone and the second solution is an acid solution of a chromium salt and an aldehyde such as formaldehyde. The use of a third solution containing an alkaline solution of formaldehyde to treat the moving strand is optional.

The first solution of polyhydric phenol and/or quinone, if used alone, provides a collagen strand which has inadequate initial wet strength and which has an excessively rapid rate of in vivo tensile strength loss. However, when this treatment is followed by the second solution containing formaldehyde, the said rate is decreased. It is known that formaldehyde alone will increase the intial wet strength of collagen, but if formaldehyde alone is used in the amount required for adequate in vivo properties, the strand is embrittled and the knot strength is lowered. By treating the strand consecutively with a polyhydric phenol and/or quinone solution and a formaldehyde solution, the rate of tensile strength loss may be greatly improved without embrittling the strand.

The purpose of the chromium in the second bath is to increase the intial wet tensile strength of the final strand. Chromium alone has only a minor effect on the rate of tensile strength loss of the collagen at the concentration employed in the present invention.

It will be understood by those skilled in the art that equivalent results would be obtained if the order of the solutions were reversed and the collagen was first treated with a chromium formaldehyde solution and then treated with the polyhydric phenol and/or quinone solution. Also, the formaldehyde and chromium can be applied separately in different solutions.

The invention will appear more clearly from the following detailed description when taken in connection with the accompanying drawings, which show by way of example, preferred embodiments of the inventive idea. Referring now to the drawings,

FIGURE 1 illustrates a machine designed to continuously tan a bonded collagen multifilament.

FIGURE 2 is a detailed perspective view of a part of the machine illustrated in FIGURE 1 showing the godet 21 which takes up the tape from the supply reel. This figure also shows the auxiliary roller 31 which is associated with the godet 21.

FIGURE 3 is a perspective view of a false twister which is used to round and shape the strand.

The starting material for the process of the present invention is a bonded collagen multifilament which will be referred to hereafter as collagen tape. This material is ribbon-like in form and is made up of from about 20 to about 500 individual collagen multifilaments. Collagen tape may be prepared by extruding a dispersion of substantially pure swollen tendon collagen fibrils through a multi-orifice spinnerette into an alkaline acetone dehydrating bath. The multifilaments, as they emerge from the spin bath, are very loosely united and are approximately circular in cross-section; however, the filaments are drawn from the spin bath by a rotating godet and the tension on the still wet filaments as they pass over the godet surface bonds the individual filaments together to form a ribbon-like strand. When the bonded multifilament is dried, the ribbon-like shape is retained. It will be understood from the foregoing that the individual filaments are

bonded together by cohesive forces to form the collagen tape.

The mechanical handling of the collagen tape as it passes through the different tanning solutions and is dried and rounded to form a strand of circular cross-section is best illustrated by FIGURE 1. The machine to be described has been designed for the continuous treatment of collagen tape containing about 195 individual filaments and shaping the tanned multifilament to form a rounded strand about 14.5 mils in diameter, but it will be understood that strands of smaller or larger diameter may be produced by varying the number of individual filaments in the collagen tape and such modifications are well within the scope of this invention.

It will be noted from FIGURE 1 that the collagen tape **11** is transferred from the supply reel **12** to the take-up spool **13** by the driven godets **21**, **22** and **23**. The tape is stretched between godet **21** and godet **22**, and is stretched again between godets **22** and **23**. Directly below each godet are auxiliary nylon rollers **31**, **32** and **33**. The rollers **31** and **32** are surrounded by trays **14** and **15** which may be filled with liquids **41** and **42** that are to be applied to the moving collagen strand. Other means of treating the moving collagen strand with liquids are provided by the jets **20**, **24** and **25**.

The tubes **16**, **17** and **18** are heated and function to dry and warm the moving strand. The desired circular cross-section of the final product can be accomplished by means of a false twister **19** which operates to round and dry the strand as it moves through the drying tubes **17** and **18**.

The three godets **21**, **22** and **23** may be made of nylon and each is preferably 3 inches in circumference. All three godets are driven by a Reeves variable speed gear reduction motor having an output speed range of 3.3 to 32.1 r.p.m. Directly below godet **21** is an auxiliary nylon roller **31**, as best shown in FIGURE 2. The separation of the collagen tape on godet **21** is controlled by moving the axis of the auxiliary roller **31** with respect to the axis of the godet. The roller **31** pivots on the hinge pin **26** and may be securely fixed in any position by the set screw **28**.

The godet **21** is driven at a speed of about 10 r.p.m. At 10 r.p.m., the linear rate of tanning is about 30 inches per minute. The collagen tape from a tensioning device **35** passes three times around godet **21**, the three loops providing sufficient time in the bath **41** to wet out the collagen tape well with the tanning solution.

Godet **22** is driven at 11 r.p.m. and, therefore, produces a 10% stretch in the tape between godet **21** and godet **22**. The amount of stretch in this stage may be increased or decreased by varying the relationship between the speeds of godet **21** and godet **22**. It will be noted that the strand is wrapped around godet **22** three times. The stretching between godet **21** and godet **22** provides orientation of the drying collagen tape and improves the tensile strength.

Conditions may, for example, be controlled so that the godet **21** is operated at 10 r.p.m., godet **22** is operated at 11 r.p.m., and godet **23** is operated at 12 r.p.m. Under these conditions, one would obtain, in addition to the 10% stretch between godets **21** and **22**, another 10% stretch between godets **22** and **23**. The over-all stretch may be varied from about 10% to 20%, and at the present time, the upper limit of stretch appears to be about 20%.

The moving collagen tape may be continously treated at godet **21** and godet **22**. The solution **41** in the tray **14** may be an alkaline aqueous solution of a polyhydric phenol and/or quinone such as: pyrogallol; resorcinol; hydroquinone; 2,2'4,4'-tetrahydroxybenzophenone; 1,2-naphthoquinone; 1,2-naphthoquinone-4-sulfonic acid sodium salt; 1,4-naphthoquinone; p-toluquinone; 1,2-anthraquinone; or mixtures of these compounds. Polyhydric phenols and quinones that are most effective in the tanning process of the present invention are those which have an unsubstituted position adjacent to the oxygen function.

In addition to the polyhydric phenol or quinone, the solution **41** may contain a small amount (about 0.5%) of a chelating agent, e.g., the disodium salt of ethylene diamine tetraacetic acid, to associate with any metal contaminants. A strong reducing agent such as formaldehyde sodium sulfoxylate (marketed as Formopan), about 0.1%, can be used in the bath to deter oxidation.

The concentration of polyhydric phenol and/or quinone in the bath (**41**) is from about 0.2% to about 2.0% and the preferred polyhydric phenol is pyrogallol. If this bath (**41**) is acidic or neutral, the collagen tape will pick up too much water. It is helpful, therefore, to adjust the pH of this bath to about 7.5–10.5 with an alkali such as ammonium hydroxide or sodium hydroxide. Excellent results have been obtained when the pH of this tanning bath is 8.3.

The collagen tape passes from the tanning bath **41** around the idler pulley **30** and then through the drying tube **16**. This drying tube has a cross-sectional area of about 2 to 3 square inches and is about 16 inches in length. Air, heated to about 150° F. is circulated through the tube **16** at the rate of about 600 cubic feet per minute.

The dried collagen tape from the tube **16** passes over an idler pulley **29**, is wrapped three times around godet **22**, and is wet out in the second tanning bath **42**. The bath **42** contains a basic trivalent chromium salt such as chromium (III) sulfate or chloride, the sulfate being preferred. Bath **42** also contains an aldehyde such as: formaldehyde, acetaldehyde; furfural; glyoxal; succindialdehyde; malonic dialdehyde; glutaraldehyde; etc. Formaldehyde is preferred. Bath **42** contains, e.g., an aqueous solution of chromium (III) sulfate and an aldehyde such as formaldehyde or glyoxal, or mixtures of the two. The concentration of chromium as chromic oxide is about 10 grams per liter, the concentration of formaldehyde and/or glyoxal is about 0.10% to about 0.32% and the pH of the bath is about 2.0–3.5 (unbuffered). If the amount of aldehyde is greater than about 0.32%; the tensile strength of the strand drops and if the amount of aldehyde is less than about 0.05%, the in vivo absorption of the strand will be rapid. In pasing through this bath, the collagen tape absorbs about 1% by weight of chromium as chromic oxide. It has been noted that the optimum wet tensile strength and dry knot strength of the finished strand is obtained when the amount of chromic oxide in the strand is about 1.0% by weight. Collagen strands (size 2/0) containing less than 0.5% chromic oxide have a low wet tensile strength and strands containing more than about 1.5% chromic oxide have poor dry knot strength.

The collagen tape passes from the bath **42** around the idler pulley **34** and through the drying tubes **17** and **18**. These tubes have a cross-sectional area similar to that of the tube **16**, but are longer, each tube being about 3 feet long. As will be noted from FIGURE 1, the tubes **17** and **18** are separated by about 6 inches. Air, heated to about 110° to 130° F. is circulated through the tube **17** at about 300 cubic feet per minute and air-heated to about 155° F. and then circulated through the tube **18** at about 450–600 cubic feet per minute.

The collagen tape from the bath **42** is rounded and shaped by contact with a false twister **19** of the type illustrated in FIGURE 3. This device automatically imparts a so-called false twist to the strand, a false twist being a twist whose direction on one side of a point of contact is reversed on the opposite side, thus cancelling the twist. The twisting cycle is most effective when the collagen tape is in the wet state, and this may be controlled by dripping water on the tape from the jet **20**. The strand may also be lubricated just prior to contact with the false twister with distilled water which is added through the jet **24**. When the twist backs up to the pulley **34**, as the wet tape emerges from it, a gradual tapering effect of the strand takes place, which rounds it out. The circular shape of the strand remains after the twist is cancelled. The false twister is operated in the range of 150 to 1000 r.p.m.

It is important that the water added through the jet 20 and the velocity and temperature of the air in the drying tubes 17 and 18 be controlled so that the wet tanned tape is sufficiently dry when the strand contacts the false twister 19 to avoid deformation. This results in an improved circular cross-section.

The round collagen strand passes from the false twister 19 around the idler pulley 36 and may contact with a solution from the jet 25 flowing downwardly in a direction opposite to the direction in which the collagen strand is moving. The solution from jet 25 is an aqueous solution of from about 0.08% to about 0.3% formaldehyde adjusted to a pH of about 9. If the concentration of formaldehyde is less than about 0.08% or if the tanning at jet 25 is eliminated entirely, the finished collagen strand will be absorbed more quickly when implanted in body tissues. If the concentration of formaldehyde is greater than about 0.3%, the finished collagen strand will be brittle and have poor dry knot strength.

The wetted out strand from the jet 25 passes through the drying tubes 18 and 17 around the idler pulley 38 and returns through the drying tubes 17 and 18 around idler pulley 40. When the godet 23 is operated at 12 r.p.m. to produce about 10% stretch between godet 22 and godet 23, the tension on the finished strand as measured by the tensiometer 44 is about 1500 grams. The dry tanned and rounded strand is removed from the godet 23 by the take-up spool 13 at about 36 inches per minute. The final strand, under the operating conditions described above, has a diameter of about 14.5 mils (sutures size 2/0).

It has been observed that atmospheric humidity, a variable during the spinning of a strand, plays an important part in the stretch and the final tensile strength of the strand. The humidity is preferably controlled by encasing the spinning operation within the smallest practical enclosure into which air of controlled humidity may be introduced. Superior uniform strands may be obtained when the relative humidity is maintained at about 40%.

The continuous processing of collagen tape to obtain a unitary strand of outstanding properties will be illustrated by the following examples. By way of contrast, several additional examples are provided to demonstrate that tanning of collagen with individual reagents, namely, a chromium salt, formaldehyde and pyrogallol, results in products having in vivo tensile strength unsatisfactory for a surgical suture. Throughout the specification, all quantities are expressed in parts by weight unless otherwise indicated.

EXAMPLE I

A collagen tape approximately 4 mils thick and 60 mils wide containing 192 individual filaments is processed on the apparatus illustrated in FIGURE 1. The speed of the godets 21, 22 and 23 is maintained at 10.0, 11.0 and 12.0 r.p.m., respectively. A solution of 0.4 part of pyrogallol, 0.1 part tetrasodiumethylene diaminotetraacetic acid and 99.5 parts of deionized water is adjusted to pH 8.3 with ammonium hydroxide and placed in the tray 14 (bath 41).

A solution of chromium (III) sulfate comprising 0.8 part of chromium as chromic oxide, 0.5 part of lactic acid (85%), 0.24 part of formaldehyde and 98.46 parts of deionized water is adjusted to pH 2.7 with sodium hydroxide and placed in the tray 15 (bath 42).

A solution of 0.16 part of formaldehyde and 99.84 parts of deionized water is adjusted to pH 9.0 with ammonium hydroxide and placed in a reservoir feeding the jet 25. Deionized water is fed to the drips at the top of the drying tube (jet 20) and the top of the twister (jet 24).

The collagen tape 11 from the tensioning device 35 passes to the godet 21 and is wrapped three times around the godet and idler 31, the latter being immersed in the bath 41. It takes approximately fifteen seconds to travel one wrap so that the total exposure to the solution 41 is about 45 seconds. The pyrogallol treated strand then moves into the drying tube 16 and is subjected to a current of warm air heated to 60° C. The partially dried strand from the tube 16 then passes over the idler pulley 29 and is wrapped three times around godet 22 and auxiliary roller 32. At this time, the moving strand contacts the solution 42 in container 15.

From the solution 42, the strand travels to the top of the drying tube 17 where it contacts a stream of deionized water dripping from the jet 20. This serves to saturate the strand with water for better bonding during twisting and also helps to remove excess chromium salts. As the strand moves downwardly through the drying tubes 17 and 18, it meets a countercurrent stream of warm air at about 60° C. and is twisted by the false twister 19, which is rotating at approximately 300 r.p.m. Just before the strand enters the false twister, it is lubricated with deionized water from the jet 24. This prevents abrasion during the untwisting process. The now rounded strand is next washed with the alkaline formaldehyde solution from jet 25 and finally dried by a double passage through the drying tubes 17 and 18. The finished strand is taken up on the godet 23, five to ten wraps being required to prevent slipping, and is stored on the take-up spool 13. In the process described above, about 10% stretch is applied between godets 21 and 22 and another 10% stretch is applied between godet 22 and godet 23. The properties of the product so obtained are summarized in Tables I and II.

EXAMPLE II

A collagen tape approximately 4 mils thick and 60 mils wide containing 192 individual filaments is processed on the apparatus illustrated in FIGURE 1. The speed of the godets 21, 22 and 23 is maintained at 7.0, 7.7 and 8.3 r.p.m., respectively.

The following solutions are used:

Solution 41 at godet 21

	Parts
Resorcinol	0.6
Deionized water	99.4

Mixture adjusted to pH 10.3 with ammonium hydroxide.

Solution 42 at godet 22

	Parts
Chromium (III) sulfate (as chromic oxide)	0.8
Formaldehyde	0.24
Glyoxal	0.32
Water	99.36

Mixture adjusted to pH 3.5 with sodium hydroxide.

Solution dripped on strand from jet 25

	Parts
Formaldehyde	0.32
Deionized water	99.68

Mixture adjusted to pH 6.0.

The tape was wrapped six times around godet 21, five times at godet 22 and nine times around godet 23. In all other respects, the conditions of Example II were identical with those described in Example I above. The properties of the product so obtained are summarized in Tables I and II.

EXAMPLE III

A suture material is prepared exactly as described in Example II above, except that the solution 41 at godet 21 is a solution of 0.6 part of hydroquinone dissolved in 99.4 parts of deionized water. The pH of this solution is adjusted to 10.3 with ammonium hydroxide. The properties of the product so obtained are summarized in Tables I and II.

EXAMPLE IV

A strand is prepared by the method described at Example I. The following solutions are used:

Solution 41 at godet 21

Water at pH 10.3 (ammonium hydroxide).

Solution 42 at godet 22

	Parts
Chromium (III) sulfate (chromic oxide)	1.0
Formaldehyde	0.32
Deionized water	98.68

Mixture adjusted to pH 3.5 with sodium hydroxide.

Solution dripped on strand from jet 25

	Parts
Formaldehyde	0.32
Water	99.68

Mixture adjusted to pH 5.6 sodium hydroxide.

The strand so obtained is then immersed for one hour in a solution of 1.0 part p-benzoquinone and 99 parts of distilled water. The strand is rinsed in acetone and air-dried. The properties of the product so obtained are summarized in Tables I and II.

EXAMPLE V

A strand is prepared by the method described in Example I, using solutions as described in Example IV above. The strand so obtained is then immersed for one hour in a solution containing 1.0 part of 1,2-naphthoquinone-4-sulfonic acid sodium salt and 99 parts of deionized water. The strand is then rinsed in acetone and dried. The product so obtained has the properties indicated in Tables I and II.

EXAMPLE VI

Extruded collagen multifilament was tanned in a basic chromium sulfate bath containing 1.25 percent Cr_2O_3. No formaldehyde or polyhydric phenol was used in the tanning process. Properties of the product are set forth in Tables I and II.

EXAMPLE VII

Extruded collagen multifilament was tanned in a bath containing 0.15 percent formaldehyde. No chromium or polyhydric phenol was used in the tanning process. Tables I and II reveal properties of the product so obtained.

TABLE I

Example	Denier	Diameter	Tensile Strength (Grams/Denier)		
			Dry Straight	Dry Knot	Wet Knot
I	1,270	15.0	3.93	2.00	1.25
II	1,350	15.5	3.16	1.61	1.55
III	1,330	15.6	3.24	1.36	1.39
IV	1,320	14.4	3.40	1.61	1.48
V	1,330	15.3	3.31	1.74	1.33
VI (only Cr)	1,390	----------	2.6	1.5	1.2
VII (only HCHO)	1,440	----------	2.41	1.39	0.98
Catgut	1,210	14.0	3.60	2.40	1.20

TABLE II

[In vivo absorption in pounds]

Example	Days Implanted						
	0	1	3	5	7	10	15
I	------	------	5.5	------	------	3.2	1.9
II	6.9	4.5	4.6	------	3.6	3.5	0.6
III	5.1	4.8	4.4	------	3.9	2.9	0.9
IV	5.4	4.5	4.6	4.3	4.0	3.9	1.7
V	5.7	5.6	5.0	3.9	4.3	3.0	0.8
VI (only Cr)	4.6	1.6	------	------	------	------	------
VII (only HCHO)	4.0	1.6	------	------	------	------	------
Catgut	8.2	5.3	4.6	3.9	3.3	2.5	1.4

EXAMPLE VIII

Another series of experiments was carried out to determine the separate effects of chromium sulfate, pyrogallol, and formaldehyde upon an extruded collagen tape. Each reagent was applied by the procedure described in Example I, above. In experiments 1 through 3, pyrogallol was applied from the bath 41 and distilled water adjusted to pH 3.5 was applied from the bath 42. In experiments 4 through 6, distilled water at pH 8.3 was placed in bath 41 and formaldehyde at pH 3.5 in bath 42. In experiments 7 through 9, distilled water at pH 8.3 was placed in bath 41 and chromium sulfate at pH 3.5 in bath 42. In all ten experiments shown below, lactic acid was elminated from bath 42, jets 20 and 24 were not used and the strand was wet out with an aqueous solution of 0.3 percent formaldehyde (pH 8.5) at the jet 25. The following results were obtained:

Compound	pH	Levels of Treatment Bath	Experiment No.
1. Pyrogallol	8.3	1, 2 and 5%	1, 2, 3.
2. Formaldehyde	3.5	0.3, 0.6 and 1.5%	4, 5, 6.
3. Chromium sulfate	3.5	1.0, 3.0 and 5.0%	7, 8, 9.
4. Combination run [1]	3.5	----------	10.

[1] First bath=1.5% pyrogallol, pH 8.3; Second bath=1.0% $Cr_2(SO_4)_3$+0.3% HCHO, pH 3.5.

Tensile strength

Sample No.	Tanning Treatment	Denier	Dry Straight	Dry Knot	Wet Knot
1	1% pyrogallol, pH 8.3	1,170	12.0	4.6	2.1
2	3% pyrogallol, pH 8.3	1,120	12.8	4.9	2.3
3	5% pyrogallol, pH 8.3	1,150	12.5	4.6	2.2
4	0.3% HCHO, pH 3.5	1,100	9.8	4.5	2.8
5	0.6% HCHO, pH 3.5	1,120	10.1	4.2	2.9
6	1.5% HCHO, pH 3.5	1,130	8.2	4.1	2.6
7	1.0% $Cr_2(SO_4)_3$	1,320	9.4	5.6	2.9
8	3.0% $Cr_2(SO_4)_3$	1,270	10.3	5.3	4.2
9	5.0% $Cr_2(SO_4)_3$	1,300	12.4	5.9	4.6
10	Combination run [1]	1,300	13.1	6.4	4.3

[1] First bath=1.5% pyrogallol, pH 8.3; Second bath=1.0% $Cr_2(SO_4)_3$+0.3% HCHO, pH 3.5.

In vivo tensile strength

Sample No.	Days						
	1	3	5	7	10	15	20
1	2.08	1.74	1.54	1.66	1.14	0.8	0.3
2	1.90	1.80	2.2	1.89	1.96	0.8	0.3
3	1.70	2.57	2.1	2.19	1.07	2.9	0.4
4	2.86	1.31	1.69	2.12	1.25	------	------
5	4.59	2.55	3.09	2.21	3.20	0.7	------
6	3.84	3.91	3.10	2.49	21.6	0.6	------
7	2.81	------	2.04	1.13	1.18	------	------
8	3.93	2.99	3.10	1.97	------	------	------
9	4.40	2.42	2.56	1.85	1.67	------	------
10	6.66	5.24	5.35	4.65	------	------	------

In connection with the data tabulated directly above, it is clear that the in vivo and in vivo tensile strength values for the tanned sample No. 10 are indicative of an excellent material.

EXAMPLE IX

Sutures prepared according to the method of the present invention contain polyhydric phenols and/or quinone reduction products that are chemically combined with the collagen. A quantitive determination of the amount of polyhydric phenol or quinone that is present in the finished suture may be made by the following method.

A 10-milligram sample of a polyhydric phenol and/or quinone tanned suture is placed in a test tube and 1 milliliter of sodium borohydride solution is added. The solution of sodium borohydride is prepared by dissolving 0.60 gram of sodium borohydride in 20 milliliters of distilled water and adding one pellet of sodium hydroxide.

This solution is prepared fresh for each group of samples. The test tube containing the suture to be analyzed and borohydride solution is heated over a Bunsen flame until the suture is dissolved. The contents of the test tube are then neutralized with concentrated sulfuric acid and the test tube is heated to decompose any excess sodium borohydride solution. The reaction mixture so obtained is cooled and diluted to 3 milliliters with distilled water. One milliliter of a vanillin reagent, prepared by dissolving 7.5 grams of vanillin in 50 milliliters of ethyl alcohol, is added and the mixture is diluted with 79% sulfuric acid to 23 milliliters. After 20 minutes, the absorbance at 520 mu is compared with a reagent blank using a Beckman D.U. spectrophotometer and four standards containing 0.01, 0.02, 0.03 and 0.04 milliliters of the polyhydric phenol or quinone subject to the analysis, such as a pyrogallol solution, prepared by dissolving 0.130 gram of pyrogallol in 4 N sulfuric acid to a total volume of 100 milliliters.

The absorbance values are plotted against the volume of standard and the percent polyhydric phenol or quinone in the sample is calculated according to the formula

$$\frac{K \times A \times 100}{\text{Sample weight (mg.)}}$$

in which A is the absorbance obtained from the curve and K, for the 0.04 milliliter standard, is 0.052 milligram pyrogallol divided by A from the curve.

The following list of polyhydric phenols and quinones has also been analyzed by this procedure. In this list, the visible wave length at which maximum absorption occurs follows the name of the compound.

	Mu
2,2',4,4'-tetrahydroxybenzophenone	520
1,2-naphthoquinone	570
1,4-naphthoquinone	575
p-Toluquinone	560
1,2-anthraquinone	545
Resorcinol	510

Accurate and reproducible results are obtained with the foregoing procedure with phenols and with quinones, with the exception of benzoquinone. A separate procedure is followed in determining benzoquinone content of a suture obtained in accordance with this invention. A 500-milligram sample of a benzoquinone-tanned suture is placed in the test tube. Five (5) milliliters of hydrochloric acid solution (2 N) are added to the tube. The tube and its contents are heated over a Bunsen flame until the suture is dissolved. The contents of the tube are cooled, 5 mls. of ethanol are added thereto, and the resulting solution is shaken. The solution is transferred to a 25 ml. volumetric flask and is made up to volume with distilled water. The resulting solution is filtered into a 50 ml. beaker. Ten (10) milliliters of the filtrate are added to a 25 ml. volumetric flask, whereupon 1 ml. of pyrogallol solution (1% in water) and 10 ml. of ethanol are added. Distilled water is then added to the 25 ml. level of the flask. After one hour, the absorbance at 425 mu is compared with a reagent blank using the said spectrophotometer and three standards containing 0.01, 0.02 and 0.03 milliliter of a benzoquinone standard solution. The standards are prepared by dissolving 100 milligrams of benzoquinone in 100 milliliters of distilled water.

The absorbance values are plotted against the volume of the standard and the percent benzoquinone in the sample is calculated according to the formula:

$$\text{Percent benzoquinone} = \frac{\text{Density reading at 425 mu} \times \text{Factor}}{\text{Weight of sample (mg.)}}$$

$$\text{Factor} = \frac{\text{milligrams of benzoquinone}}{\text{absorbency unit}} \times \frac{25 \times 100}{10}$$

I have found that sutures prepared by the method of the present invention contain about 0.25% to about 0.92%, and preferably from about 0.30% to about 0.70%, polyhydric phenol and/or quinone as determined by the foregoing analytical methods.

By way of contrast, extruded collagen strand and hide were treated with resorcinol and formaldehyde by the procedures given in the following examples. As shown therein, the products obtained therein contain substantially larger percentages of polyhydric phenol than about 0.25% to about 0.92% characteristic of the sutures of this invention.

EXAMPLE X

Extruded collagen tape (40 grams) was added to a solution containing 100 grams of distilled water, 7 grams of resorcinol, 14 grams of formalin and 5.5 grams of sodium chloride. The pH of the resulting solution was 2.7. The collagen tape was rolled in the solution for 2 hours. The pH of the solution was adjusted to pH 1.5 by slowly adding concentrated sulfuric acid thereto; this was maintained for 3 hours. Additional sulfuric acid was added to bring the pH to 1.0. The collagen tape was rolled in the solution overnight (17 hours). The solution was gradually neutralized with 1.5 grams of sodium acetate and then with 0.75 gram of sodium bicarbonate. The collagen tape was then rolled in the solution, pH 5.5, was washed in tap water for one hour, and was finally dried during a 24-hour interval. The treated collagen tape, on analysis, contains 1.05 percent resorcinol.

EXAMPLE XI

The procedure described in Example X, above, was used in treating 50 grams of wet, fresh, neutral hide. The initial solution contained:

	Grams
Distilled water	100
Resorcinol	3.5
Formalin	14
Sodium chloride	2.8

On analysis, it was determined that the treated hide contains 1.18 percent resorcinol.

EXAMPLE XII

Extruded collagen tape (4 grams) and wet, fresh, neutral hide (25 grams) were tanned concurrently. The tape and hide were added to a solution of:

	Grams
Distilled water	370
Resorcinol	3.7
Formalin	7.4
Sodium chloride	5.0

The pH of the solution was adjusted to 2.0 with concentrated sulfuric acid. The tape and hide were rolled in the solution for 2 hours. Additional sulfuric acid was added to reduce the pH to 1.5. Again, the tape and hide were rolled for 2 hours, and held in the solution overnight (17 hours). The pH was adjusted to 1.0 by the addition of sulfuric acid, and the materials were rolled for a 2-hour period. Further adjustment of pH to 0.6 was made with more of the acid. The materials were held in the solution overnight (17 hours). Sodium bicarbonate (1.3 grams) was added slowly to the solution, and the tape and hide were rolled in the resulting mixture for 2 hours. The materials were again held overnight. Additional sodium bicarbonate (1.3 grams) was added. The resulting materials were held overnight. Finally, the tape and hide were washed with distilled water for 3 hours. Upon analysis, it was determined that the resorcinol contents of the tape and hide are, respectively, 1.23% and 1.37%.

It will be understood that the process described above may be utilized in the preservation of other collagenous materials such as leather, the useful life of which is frequently shortened by the attack of micro-organisms and enzymes produced by such micro-organisms.

The method of treating collagen articles with quinones and the products obtained thereby is claimed in copending application Serial No. 284,209 filed concurrently herewith as a continuation-in-part of application Serial No. 85,289, filed January 27, 1961.

While the invention has been described in detail according to the preferred method of carrying out the process and yielding the products, it will be obvious to those skilled in the art that changes and modifications can be made without departing from the spirit or scope of the invention, and it is intended in the appended claims to cover such changes and modifications.

What is claimed is:

1. In a method of tanning collagen that has been acid-swollen, extruded and reconstituted; the steps of contacting said collagen with at least two different solutions, one of said solutions containing a polyhydric phenol selected from the group consisting of monocyclic and dicyclic polyhydric phenols, and another of said solutions containing an aldehyde and a basic trivalent chromium salt.

2. The method of claim 1 in which said polyhydric phenol is pyrogallol.

3. The method of claim 1 in which said polyhydric phenol is hydroquinone.

4. The method of claim 1 in which said polyhydric phenol is resorcinol.

5. The method of claim 1 in which said aldehyde is formaldehyde.

6. The method of claim 1 in which said aldehyde is glyoxal.

7. The method of claim 1 in which the collagen is in the form of a tape.

8. In a method of tanning collagen that has been swollen, extruded and reconstituted; the steps of contacting said collagen with a solution of a polyhydric phenol selected from the group consisting of monocyclic and dicyclic polyhydric phenols, and subsequently contacting said collagen with a solution of an aldehyde and a basic trivalent chromium salt.

9. In a method of tanning collagen that has been swollen, extruded and reconstituted; the steps of contacting said collagen with a solution of an aldehyde and a basic trivalent chromium salt, and subsequently contacting said collagen with a solution of a polyhydric phenol selected from the group consisting of monocyclic and dicyclic polyhydric phenols.

10. In a method of tanning a collagen suture obtained by extruding and reconstituting acid-swollen collagen; the steps of contacting said suture with an alkaline solution containing pyrogallol and subsequently contacting said suture with an aqueous solution containing about 0.24 part of formaldehyde, about 0.8 part of chromium III sulfate calculated as chromic oxide, and having a pH of about 2.7.

11. An aldehyde, phenol and chrome tanned collagen article obtained by extruding and reconstituting acid-swollen collagen, said article analyzing from about 0.25% to about 0.92% by weight of a polyhydric phenol selected from the group consisting of monocyclic and dicyclic polyhydric phenols, and characterized by a chromium analysis from about 0.5% to about 1.5% by weight chromic oxide.

12. An aldehyde, phenol and chrome tanned collagen suture obtained by extruding and reconstituting acid-swollen collagen, said suture analyzing from about 0.25% to about 0.92% by weight of pyrogallol, and characterized by a chromium analysis of from 0.5% to about 1.5% by weight chromic oxide.

13. An aldehyde, phenol and chrome tanned collagen suture obtained by extruding and reconstituting acid-swollen collagen, said suture analyzing from about 0.25% to about 0.92% by weight of resorcinol, and characterized by a chromium analysis of from 0.5% to about 1.5% by weight chromic oxide.

14. An aldehyde, phenol and chrome tanned collagen suture obtained by extruding and reconstituting acid-swollen collagen, said suture analyzing from about 0.25% to about 0.92% by weight of hydroquinone, and characterized by a chromium analysis of from 0.5% to about 1.5% by weight chromic oxide.

References Cited in the file of this patent

UNITED STATES PATENTS

1,985,439	Blackadder	Dec. 25, 1934
2,164,101	Adams	June 27, 1939
2,191,943	Russell et al.	Feb. 27, 1940
2,401,373	Robinson	June 4, 1946
2,475,697	Cresswell	July 12, 1949
2,552,129	Windus	May 8, 1951
2,552,130	Windus	May 8, 1951

FOREIGN PATENTS

10,460 of 1909	Great Britain	Mar. 10, 1909

OTHER REFERENCES

O'Flaherty et al.: The Chemistry and Technology of Leather, pages 91–94, 254–255, 261, 267 and 273–275, published 1958 by Reinhold Pub. Co., N.Y.C.

Chen: "Syntans and Newer Methods of Tanning," The Chemical Elements, South Lancaster, Mass., 1950, pp. 87–96.